HX-20

TECHNICAL MANUAL

EPSON

H8290013-1

TECHNICAL MANUAL
HX-20

PORTABLE COMPUTER

This Technical Manual provides technical information on the structure, maintenance, and repairs of the EPSON PORTABLE Computer HX-20.

Major technical modifications, if made in the future, will be notified through Service Bulletins, and the Technical Manual should be revised accordingly. The details of the Manual are subject to change without notice.

All the information given in the Manual concerns the HX-20, and we are not responsible for any troubles with the industrial copyright of a third party that might arise from your application of the Manual to other products or from the connection of the HX-20 to others.

Duplication or transcription of the Technical Manual, in part or in whole, is prohibited.

CHAPTER 1
GENERAL

1.1 GENERAL

1.1 Features 1- 1
1.2 System Configuration 1- 1
1.2.1 System Connection Diagram 1- 2
1.3 Main Components 1- 3
1.4 Specifications of HX-20 ..... 1- 4
1.4.1 Dimensions and Ambient Conditions 1- 4
1.4.2 Power Supply 1- 4
1.4.3 AC Adaptor 1- 4
1.4.4 Micro Printer (Model-160) 1- 4
1.4.5 Liquid Crystal Display 1- 5
1.4.6 Keyboard 1- 5
1.4.7 RS-232C Interface 1- 5
1.4.8 Serial Interface 1- 5
1.5 Specifications of Options 1- 6
1.5.1 Expansion ROM 1- 6
1.5.2 Cartridge (ROM/Microcassette) 1- 6
1.5.3 Expansion Unit 1- 6
1.5.4 Display Controller 1- 6
1.5.5 Terminal Floppy (TF-20X) 1- 6
1.5.6 Acoustic Coupler (CX-20) 1- 7

1.1 Features

The HX-20 is an all-in-one type miniature portable computer with a liquid crystal display and a microprinter built inside the main body, designed to operate on the batteries inside. A variety of options are available to facilitate system configuration and extension.

1.2 System Configuration

The HX-20 normally consists of ① a 24 characters per line microprinter, ② liquid crystal display (20 characters x 4 lines to display 80 characters), ③ typewriter type keyboard (with 68 keys), ④ RS-232C interface, ⑤ high-speed serial interface, ⑥ cartridge (ROM or microcassette) interface, ⑦ audio cassette interface, ⑧ bar code reader interface, ⑨ ROM (32 KB), and ⑩ RAM (16 KB), and permits system configuration that is extendable as shown in Fig. 1-1.

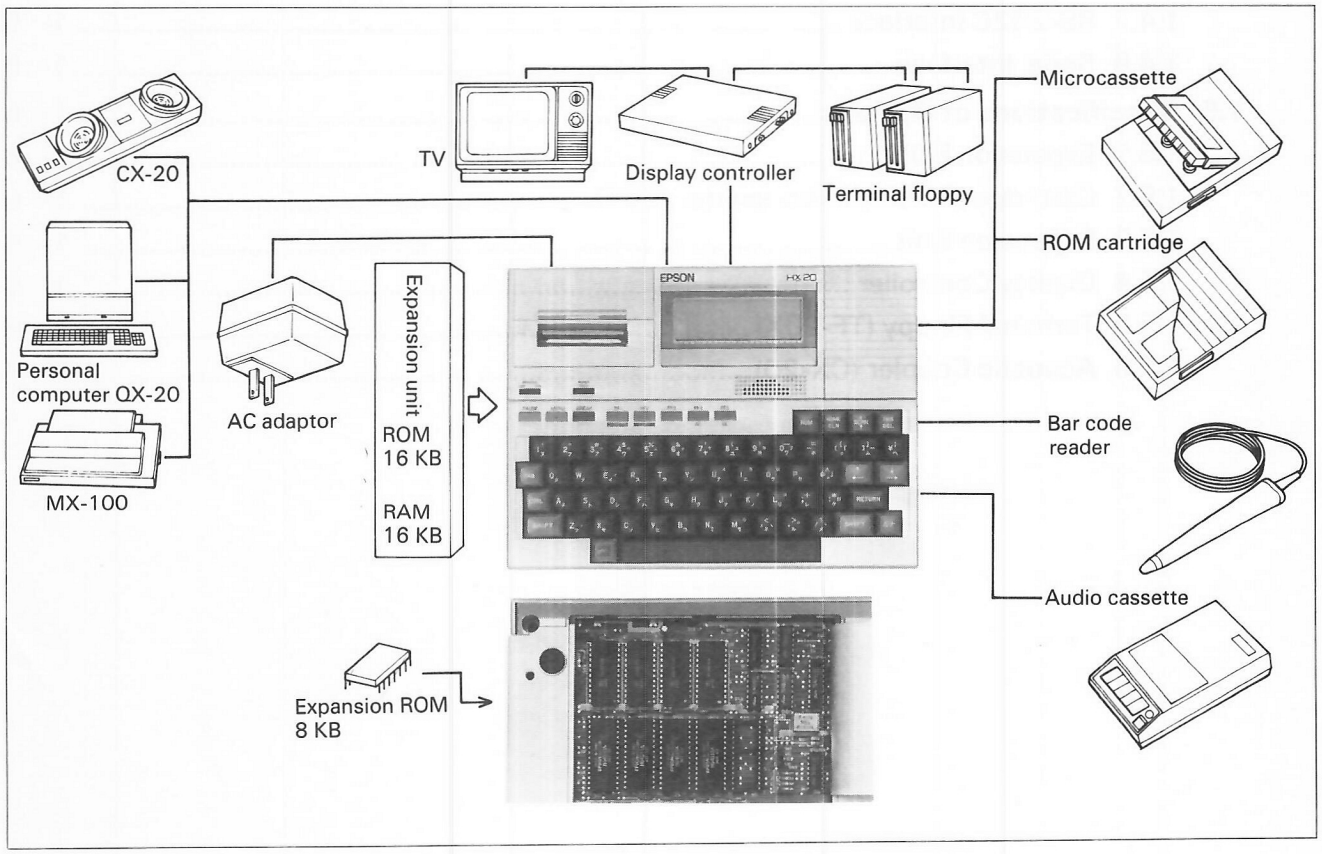

Fig. 1-1

1.2.1 System Connection Diagram

Additional ROMs (8 k each) can be installed in the main body. Other options may be connected to it via the interface connectors on the main body as shown below.

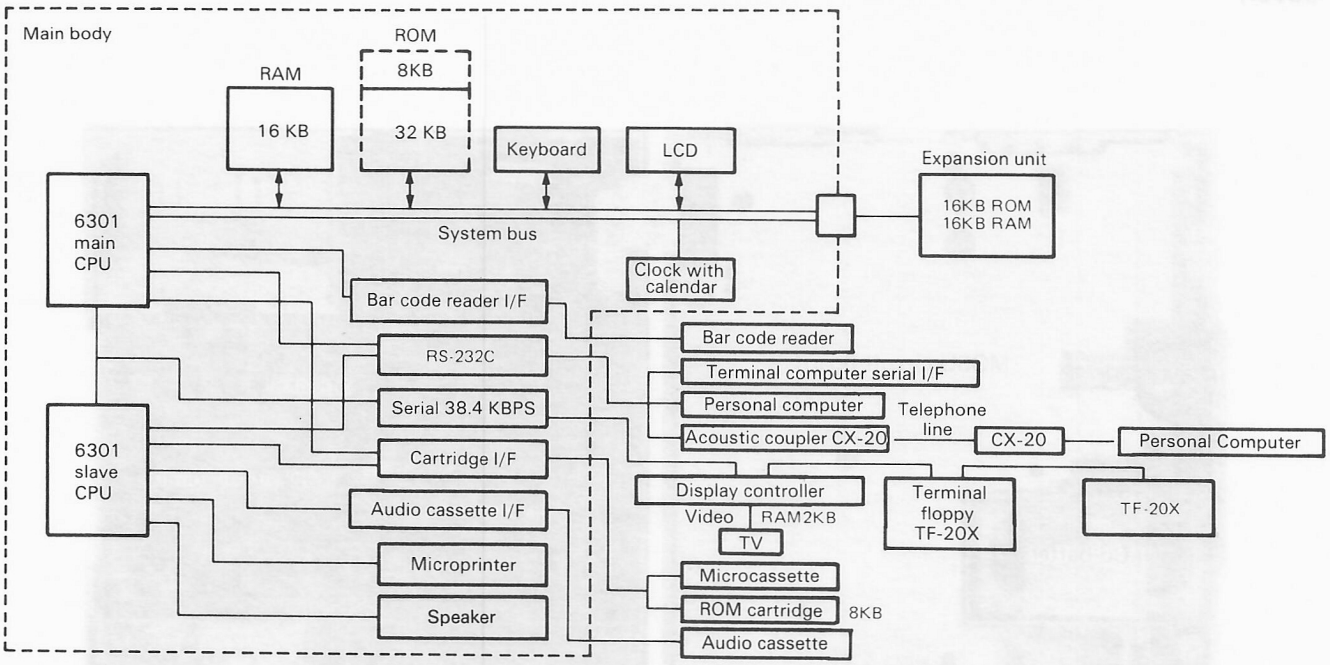

Fig. 1-2

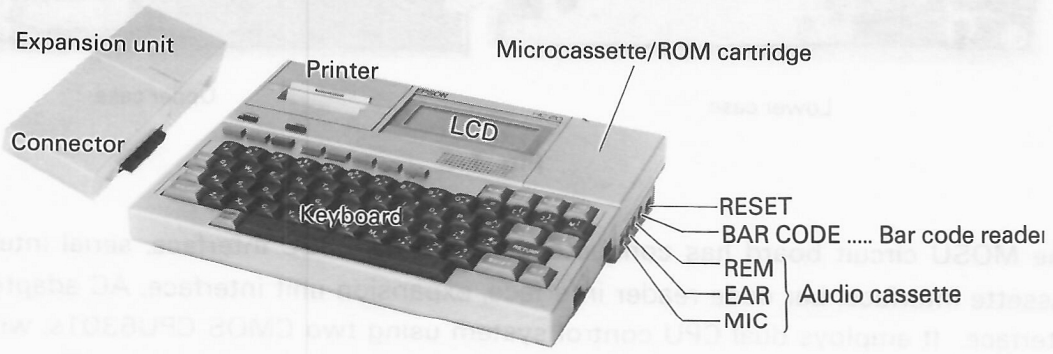

Fig. 1-3

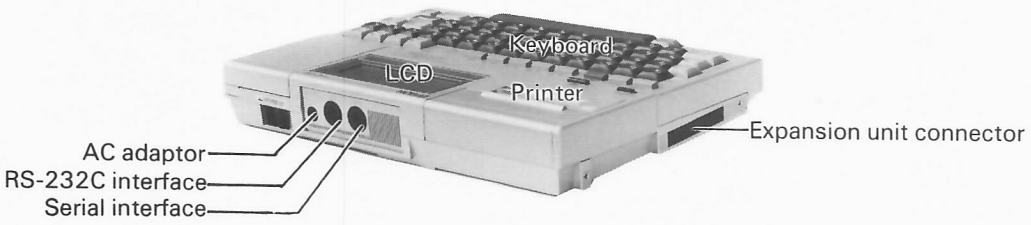

Fig. 1-4

1.3 Main Components

The computer proper consists of ① MOSU control circuit board, ② keyboard unit, ③ liquid crystal display panel (LCD circuit board), ④ microprinter, ⑤ Ni-Cd battery, ⑥ buzzer, and ⑦ case cover.

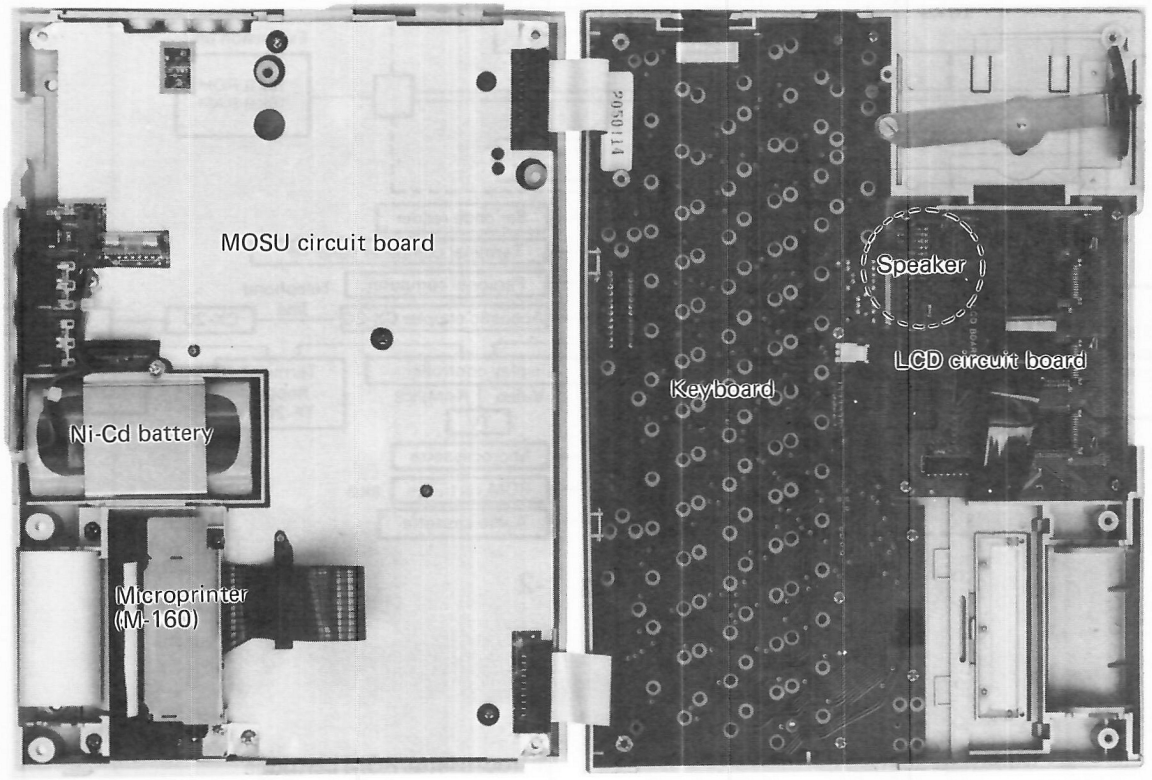

Fig. 1-5

(1) The MOSU circuit board has connectors for the RS-232C interface, serial interface, audio cassette interface, bar code reader interface, expansion unit interface, AC adaptor, cartridge interface. It employs dual CPU control system using two CMOS CPU6301s, which permits dispersed processing of the interface and thus improves system performance.

(2) The keyboard has a power switch, view angle volume for LCD, and its control circuit.

1.4 Specifications of HX-20

1.4.1 Dimensions and Ambient Conditions

Dimensions and Weight

(1) Dimensions:	290 mm wide × 215.5 mm deep × 44 mm high
(2) Weight:	Approx. 1.7 kg

Ambient Conditions

(1) Temperature:	5°C to 35°C (operating) 5°C to 35°C (charging) –5°C to 40°C (data storage) (RAM battery backup) –20°C to 60°C (non-operating)
(2) Relative humidity:	10% to 80% (operating, no condensation) 10% to 80% (non-operating, no condensation)
(3) Shock resistance:	1 G for 1 ms maximum (operating)
(4) Vibration resistance:	0.25G 55 Hz maximum (operating)

1.4.2 Power Supply (Nicd batteries)

(1) Voltage:	4.5V to 6.0V (operating) 4.0V to 6.0V (data storage) 4.5V (low voltage detection)
(2) Battery capacity:	Approx. 1100 mAH

1.4.3 AC Adaptor

(1) Input voltage:	U.S. – AC 115V ±10% Europe – AC 220V/240V ±10%
(2) Power consumption:	8W
(3) Insulation resistance:	10 megohms between AC power supply and case
(4) Insulation strength:	Can withstand 1 kV applied between AC power supply and case for 1 minute or more.

1.4.4 Microprinter (M-160)

(1) Printing system:	Dot impact (4 printing solenoids)
(2) Printing format	
1) Total number of dots:	144 dots maximum/dot line
2) Number of characters per line:	24 maximum (5 × 7 dots; character-to-character space 1 dot) (6 characters/printing solenoid)
(3) Printing speed	
1) 1 dot line:	Approx. 150 ms (continuous printing)
2) 5 × 7 dot matrix (inter-line space 3 dots):	Approx 0.7 line/s (continuous printing)

(4) Character size

1) Dot spacing:	0.33 mm horizontal 0.33 mm vertical
2) 5 × 7 dot matrix:	1.7 mm wide, 2.4 mm high

(5) Recording paper

1) Kind:	Ordinary paper
2) Paper width:	57.5 ±0.5 mm
3) Outside diameter:	50 mm or less
4) Thickness:	0.07 mm
5) Weight:	52.3 g/m² (45 kg/1000 sheets/1091 sheets × 788 mm)

(6) Paper feed: Automatic feed every dot line; with paper release

(7) Inking

Ribbon cartridge type

Automatic continuous feed during motor operation

1) Color:	Purple/Black
2) Dimensions:	Approx. 91 mm wide, 25 mm deep, 7 mm high
3) Life:	Approx. 10,000 lines
4) Standard:	ERC-09

1.4.5 Liquid Crystal Display

(1) Text:	English capitals, large letters, small letters, numerals, symbols, characters, etc.; 20 characters per line; 4 lines in total (20 × 4 = 80 characters)
(2) Graphic:	120 dots (horizontal) × 32 dots (vertical)
(3) View angle adjustment:	Adjustable with VIEW ANGLE volume

1.4.6 Keyboard

(1) Key switches:	68 keys (including 5 function keys and 13 special keys)
(2) Contact points:	Function keys ..... Electroconductive rubber contact point Data and special keys..... F.P.C. carbon contact point
(3) Others:	Power on switch, VIEW ANGLE volume for LCD, and adjusting circuit built in

1.4.7 RS-232C Interface

(1) Connector:	DIN (8-pin) TCS 4480
(2) Input and output levels:	RS-232C standard
(3) Transfer speed:	110, 150, 300, 600, 1200, 2400, 4800 bps (selectable by operator)

1.4.8 Serial Interface

(1) Connector:	DIN (5-pin) TCS 4450
(2) Input and output levels:	RS-232C standard
(3) Transfer speed:	150, 600, 4800, 38, 400 bps (selectable by operator)

1.5 Specifications of Options

1.5.1 Expansion ROM

(1) Capacity: 8 KB maximum (plugged into the IC socket of the main body)

1.5.2 Cartridge (ROM/microcassette)

ROM Cartridge

(1) Capacity: 8 KB to 32 KB (2764 pins conpatible × 1)
(2) Data transfer: Serial transfer

Microcassette

(1) Tape: Microcassette MC-30
(2) Tape drive: Center capstan
(3) Tape speed: 2.4 cm/sec.

1.5.3 Expansion Unit

(1) Capacity: ROM 16 KB (2365 × 2), RAM 16 KB (2KB × 8)
(2) Data transfer: Parallel transfer (directly coupled to data bus line)
(3) Access: Direct access (directly coupled to address bus)

1.5.4 Display Controller

(1) Text: 32 characters × 16 lines (512 characters)
(2) Graphic: 128 × 64 dots – 4 colors
128 × 96 dots – monochrome
(3) Kinds of characters: 256
(4) Interface: Serial interface
(5) Video RAM: 2 KB
(6) Output: Composite RF (Japan and U.S.)
(7) Power supply: U.S. – AC 115V
Europe – AC 220V

1.5.5 Terminal Floppy (TF-20)

(1) Memory capacity: 328 KB/drive × 2 drives; 16 sectors/track × 80 tracks; double density double sided 5.25 inches
(2) Memory density: 5896 bpi
(3) Data transfer speed: 250 KB/sec.
(4) Recording system: MFM
(5) Interface: RS-232C level (High-speed serial interface used)

1.5.6 Acoustic Coupler CX-20

(1)	Transfer system:	Half duplex/full duplex (selectable)
(2)	Transfer speed:	300 BPS
(3)	Modulation:	FSK (Frequency modulation)
(4)	Interface:	RS-232C
(5)	Power supply:	UM3 Ni-Cd battery × 4, AC adaptor

CHAPTER 2
HARDWARE COMPOSITION AND INTERFACES

2.1 HX-20

2.1.1 Hardware Composition 2- 1
2.1.2 MOSU Control Circuit Board Block Diagram 2- 2
2.1.2.1 MOSU Control Board Block Diagram 2- 3
2.1.2.2 Power Suppy 2- 4
2.1.2.3 System Buses 2- 4

2.2 Interfaces

2.2.1 Connector Locations 2- 5
2.2.2 CN1 Connector (Serial Interface) 2- 7
2.2.3 CN2 Connector (RS-232C Interface) 2- 8
2.2.4 CN3 Connector (AC Adaptor) 2- 9
2.2.5 CN4 Connector (Keyboard Interface) 2-10
2.2.6 CN5 Connector (Keyboard Interface) 2-11
2.2.7 CN6 Connector (Printer Interface) 2-12
2.2.8 CN7 Connector (Extension Unit Interface) 2-13
2.2.9 CN8 Connector (Microcassette/ROM Cartridge 2-14
2.2.10 CN9 Connector (Battery Connector) 2-15
2.2.11 KCN1 Connector (K.B) ↔ LCD Interface) 2-16
2.2.12 KCN2 Connector (Piezoelectric Speaker Connector) 2-16

2.3 Interface Cables

2.3.1 Cable Connection Diagram 2-17
2.3.2 Cable Set No. 702 (for External Cassette Connection) 2-18
2.3.3 Cable Set No. 705/No. 706 (for Coupler Connection) 2-19
2.3.4 Cable Set No. 707 (for Display Controller Connection) 2-20
2.3.5 Cable Set No. 708/Switch Box (for TV Monitor Connection) 2-21
2.3.6 Cable Set No. 714/No. 715 (for Printer Connection) 2-22
2.3.7 Cable Set No. 716 (for HX-20 Connection – RS-232C) 2-23
2.3.8 Cable Set No. 717 (for HX-20 Connection – Serial) 2-24

2.1 HX-20

2.1.1 Hardware Composition

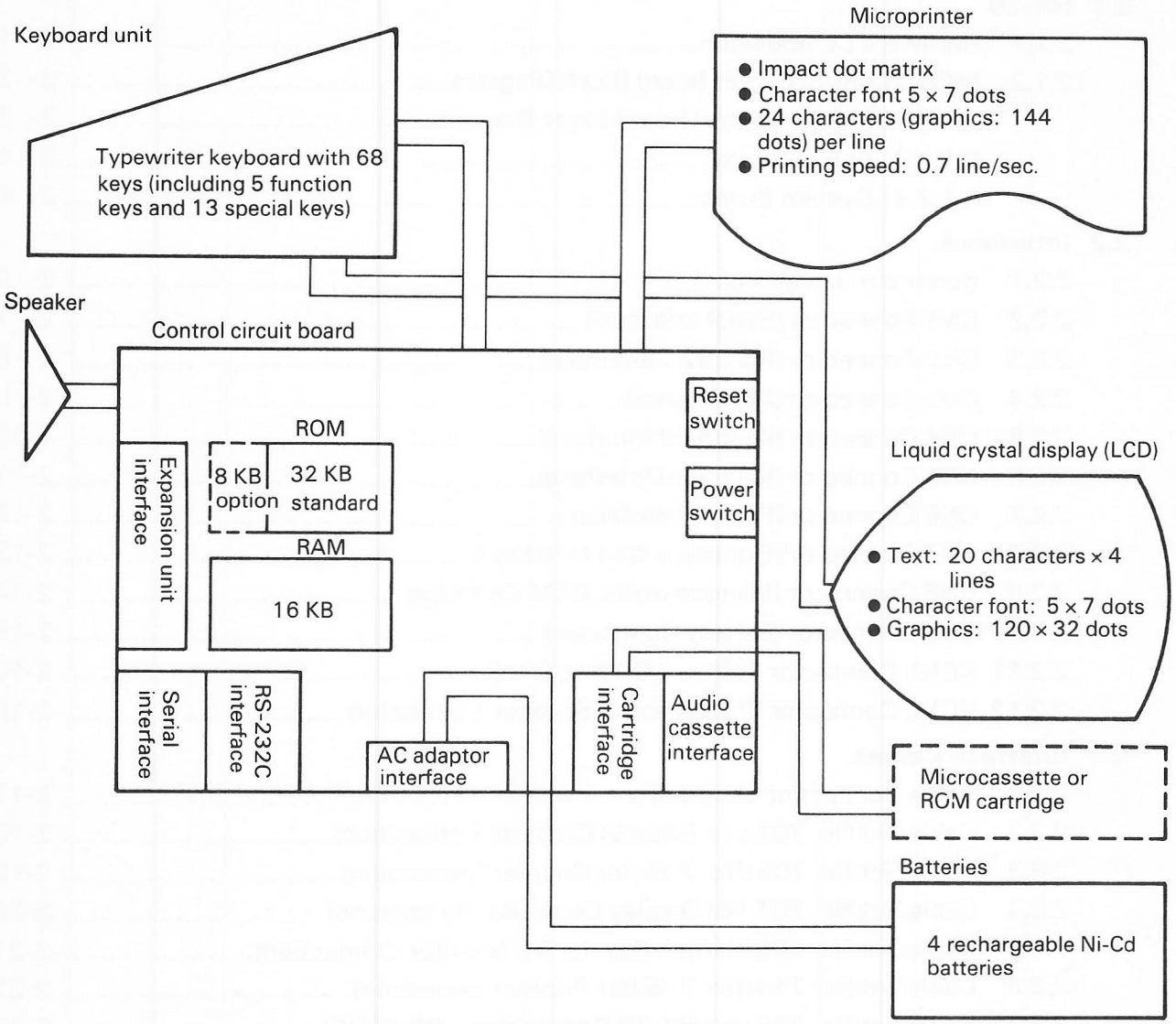

Fig. 2-1 Block Diagram

As shown in the above block diagram, the HX-20 consists of 6 blocks, i.e., control circuit board, keyboard, microprinter, liquid crystal display, buzzer, and batteries. Each block is connected to the control circuit board, and installed in the casing of the HX-20 proper.

2.1.2 MOSU Control Circuit Board Block Diagram

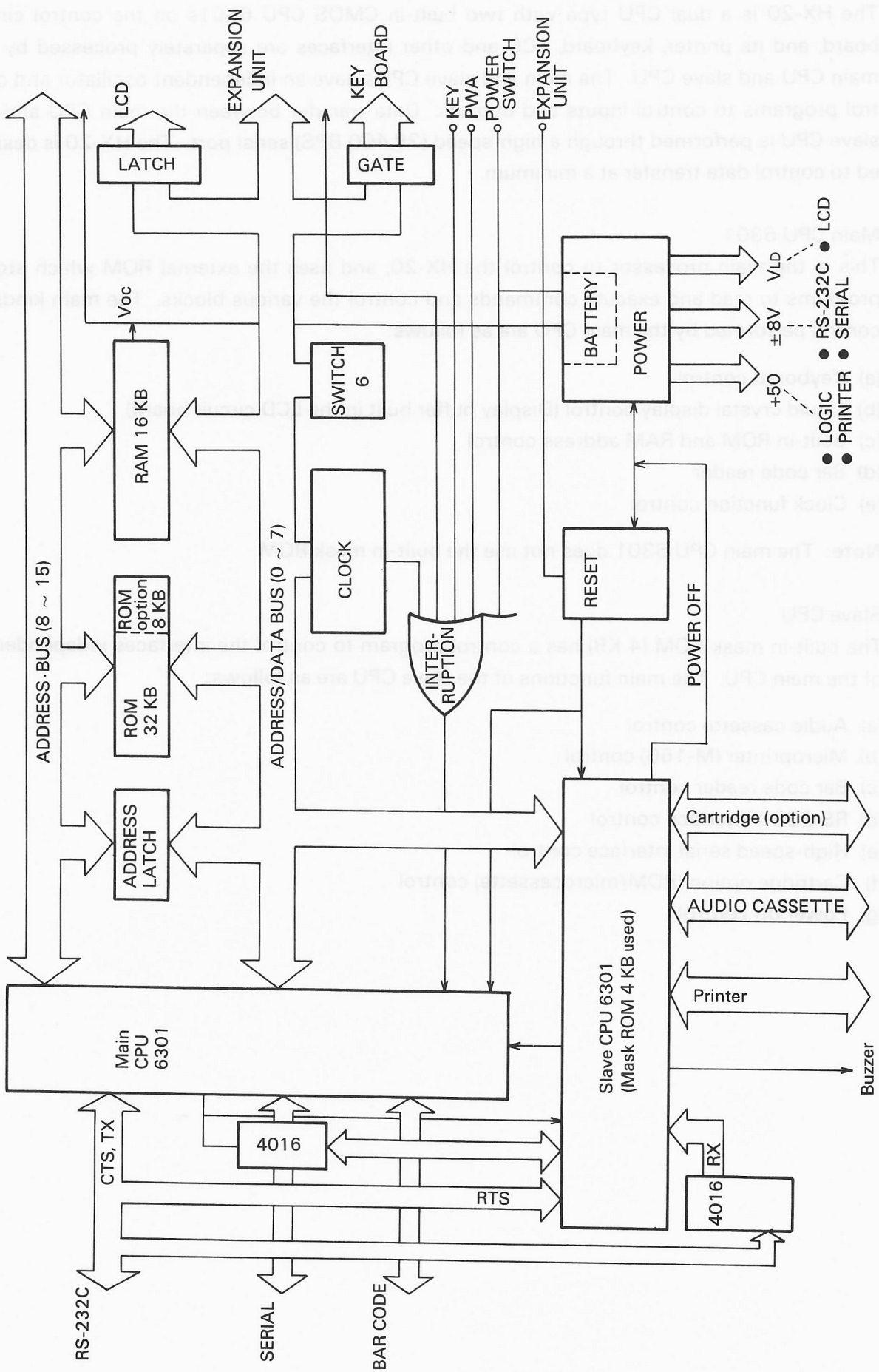

Fig. 2-2 Control Circuit Board Block Diagram

2.1.2.1 MOSU Control Circuit Board

The HX-20 is a dual CPU type with two built-in CMOS CPU 6301s on the control circuit board, and its printer, keyboard, LCD and other interfaces are separately processed by the main CPU and slave CPU. The main and slave CPUs have an independent oscillator and control programs to control inputs and outputs. Data transfer between the main CPU and the slave CPU is performed through a high-speed (38,400 BPS) serial port. The HX-20 is designed to control data transfer at a minimum.

Main CPU 6301

This is the main processor to control the HX-20, and uses the external ROM which stores programs to read and execute commands and control the various blocks. The main kinds of control performed by the main CPU are as follows:

(a) Keyboard control
(b) Liquid crystal display control (Display buffer built in the LCD circuit board)
(c) Built-in ROM and RAM address control
(d) Bar code reader
(e) Clock function control

Note: The main CPU 6301 does not use the built-in mask ROM.

Slave CPU

The built-in mask ROM (4 KB) has a control program to control the interfaces independently of the main CPU. The main functions of the slave CPU are as follows:

(a) Audio cassette control
(b) Microprinter (M-160) control
(c) Bar code reader control
(d) RS-232C interface control
(e) High-speed serial interface control
(f) Cartridge option (ROM/microcassette) control
(g) Power off control

2.1.2.2 Power Supply

The power supply consists of batteries, charging circuit with an AC adaptor, voltage detector circuit, LCD voltage circuit, RS-232C voltage circuit, and backup circuit, and is designed for low power consumption.

(a) Fuse: 5A fuse is used for protection from overcurrent.

(b) Charging circuit: This circuit consists of a noise filter, reverse current preventing diode and resistor, and also has a zener diode for protection from high voltage on the output side of the fuse.

(c) Voltage detector circuit: This circuit keeps monitoring the battery voltage after power is turned on. If the battery voltage drops to less than 4.5V, the circuit sends a $\overline{\text{POWER ABNORMAL}}$ signal to the main CPU to notify of the low voltage.

(d) LCD voltage circuit: This circuit converts the battery voltage into a DC voltage of approximately +7V to operate the liquid crystal display.

(e) RS-232C voltage circuit: This circuit generates a voltage of approximately $\pm$8V from the battery voltage to meet the RS-232C requirements. This voltage circuit is designed to output the $\pm$8V only when the RS-232C is used, and this voltage is switched on and off by the slave CPU.

(f) Backup circuit: This circuit supplies the minimum current required to protect the data stored in the RAM when the power switch is off, to keep the clock going, and to maintain the components ready for operation when power is turned on.

2.1.2.3 System Buses

(a) Address data buses: There are 16 address buses, of which the 8 lower buses are also used as data buses by switching with a timing pulse.

(b) RS-232C: Data is transferred within the range of 110 BPS to 4,800 BPS.

(c) Serial: This interface is used for data transfer between the main CPU and slave CPU, and data transfer with the display controller at speeds of up to 38,400 BPS.

2.2 Interfaces

2.2.1 Connector Locations

The HX-20 has a total of 12 connectors, including 9 on the MOSU control circuit board, 2 on the keyboard, and 1 on the cartridge option. See the diagrams below for the locations of the connectors and general information on them.

(1) MOSU Circuit Board Connectors

Connector	No. of Pins	Connection
CN1	5	Serial interface
CN2	8	RS-232C
CN3	2	AC adaptor
CN4	20	Keyboard
CN5	20	Keyboard
CN6	20	Printer
CN7	40	Expansion unit
CN8	14	Cartridge option
CN9	2	Batteries

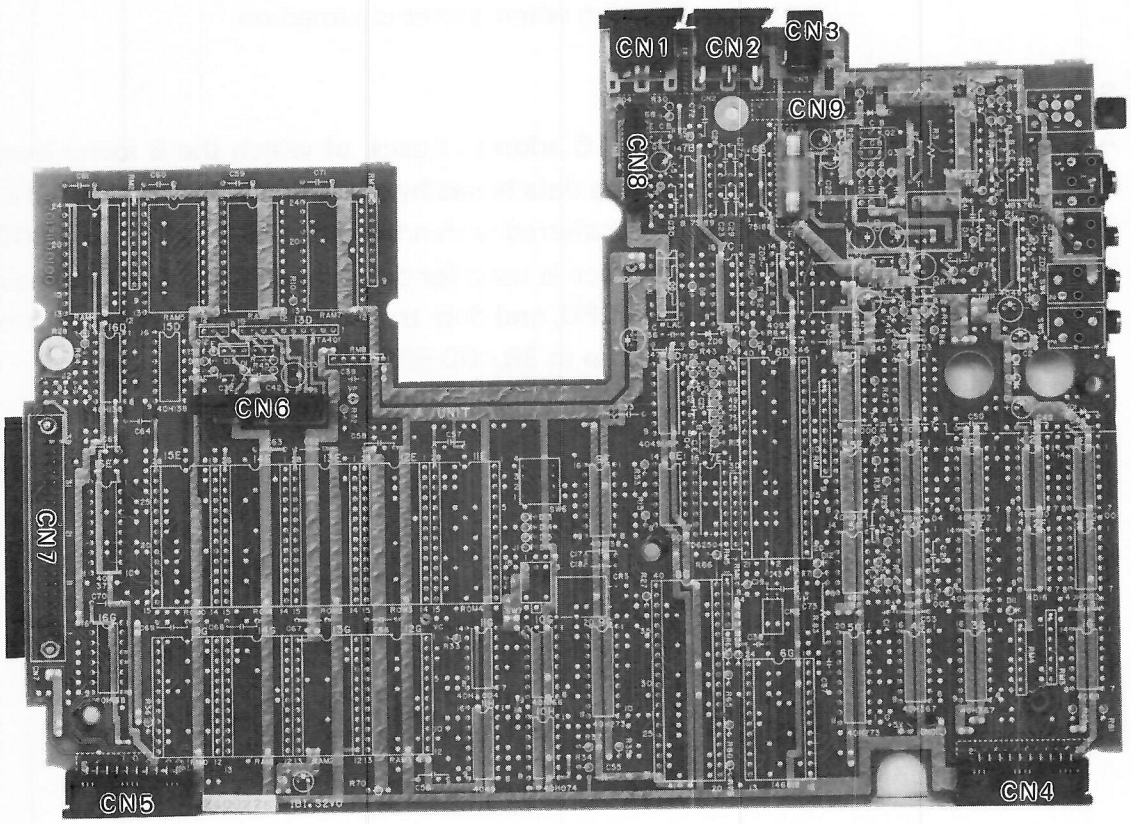

Fig. 2-3 Rear View of MOSU Circuit Board

(2) Keyboard Connectors

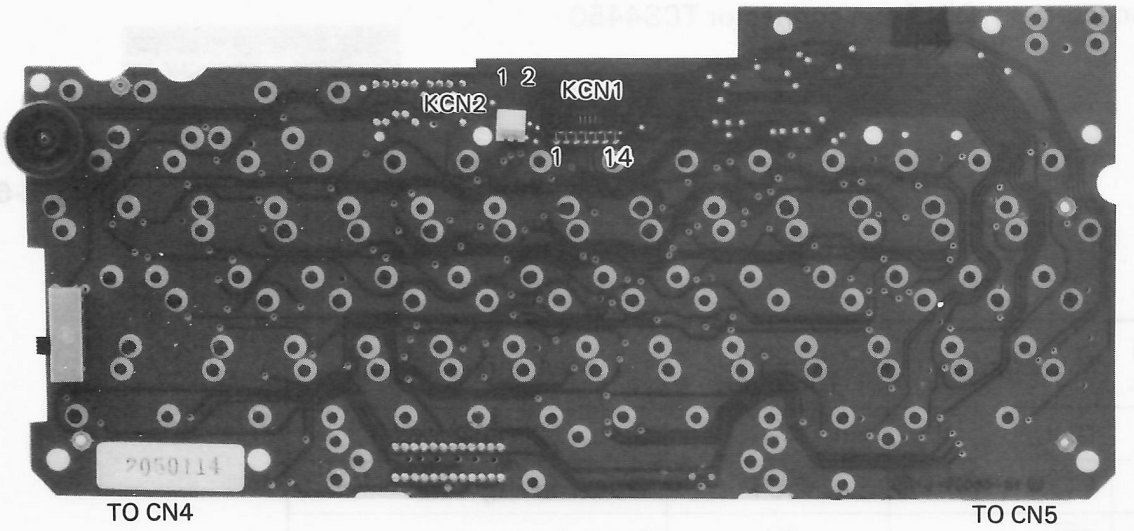

Fig. 2-4

Connector	No. of Pins	Connection
KCN1	2	Speaker
KCN2	14	LCD

(3) Connector for Cartridge Option



Fig. 2-5

2.2.2 CN1 Connector (Serial Interface)

(a) Use: Connector for the high-speed serial interface to exchange data with the display controller

(b) Connector: DIN 5-pin connector TCS4450

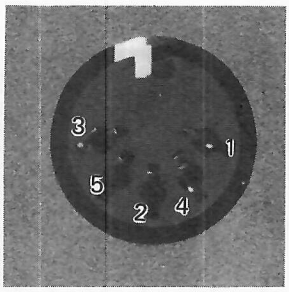

Fig. 2-6

Signal Pin No.	Signal	Signal Direction	Meaning of Signal
1	GND	–	Signal GND
2	$\overline{\text{PTX}}$	OUT	Transmitting data
3	$\overline{\text{PRX}}$	IN	Receiving data
4	P OUT	IN	Transmitting mode
5	P IN	OUT	Receiving mode
6	CG	–	Case GND

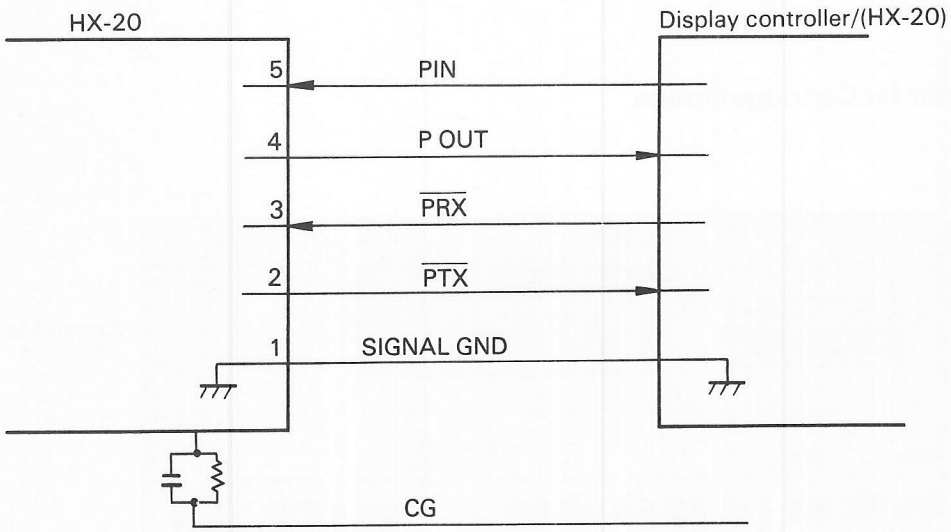

Fig. 2-7

2.2.3 CN2 Connector (RS-232C Interface)

(a) Use: Interface connector for sending data to and receiving data from the coupler and a developed unit etc.

(b) Connector: DIN 8-pin connector TCS 4480

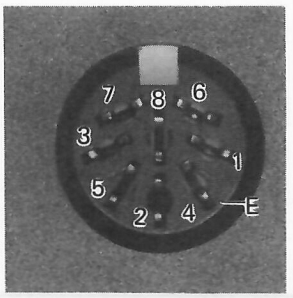

Fig. 2-8

Signal Pin No.	Signal	Signal Direction	Meaning of Signal
1	GND	–	Signal GND
2	TXD	OUT	Transmitting data
3	RXD	IN	Receiving data
4	RTS	OUT	Request to send
5	CTS	IN	Clear to send (ready for sending)
6	DSR	IN	Data set ready (Modem ready)
7	DTR	OUT	Data terminal ready
8	CD	IN	Carrier detect
E	FG	–	Case GND

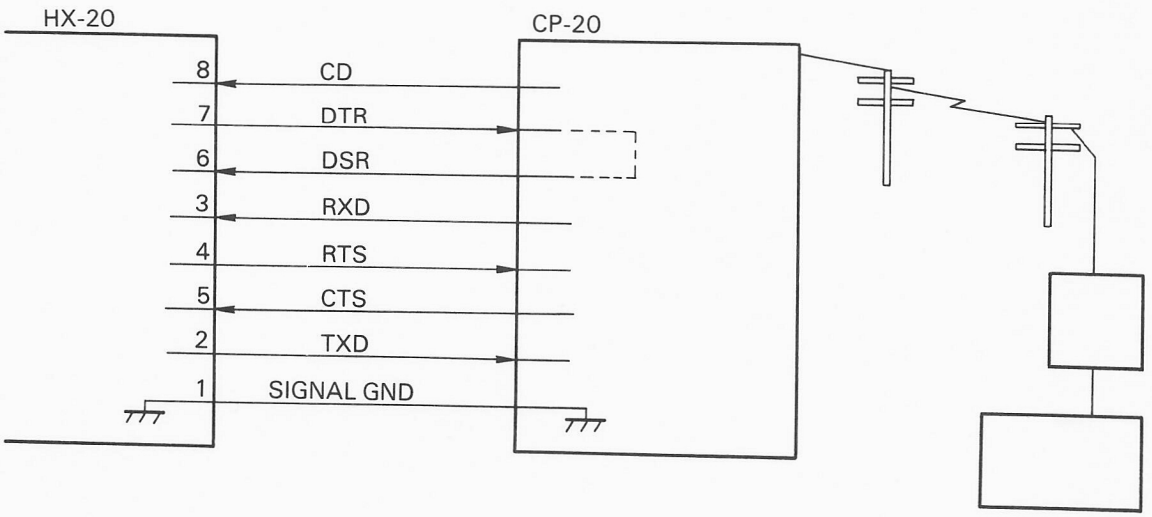

Fig. 2-9

2.2.4 CN3 Connector (AC Adaptor)

(a) Use: AC adaptor connector for recharging the built-in batteries

(b) No. of pins: 2

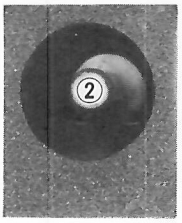

Fig. 2-10

Signal Pin No.	Signal	Meaning of Signal
1	AC+	AC adaptor positive output (+6V)
2	AC–	AC adaptor ground (GND)

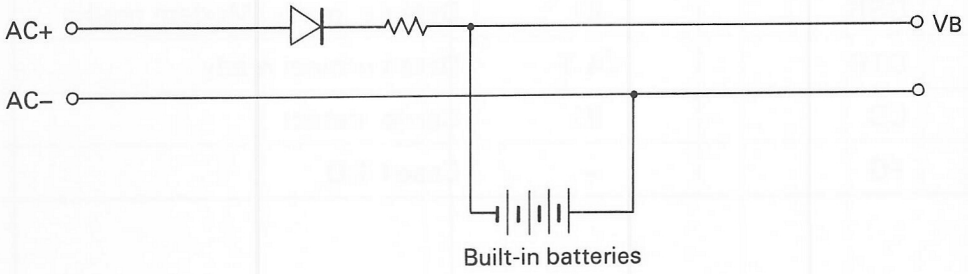

Fig. 2-11

2.2.5 CN4 Connector (Keyboard Interface)

(a) Use: For connecting keyboard and LCD control signals

(b) No. of pins: 20

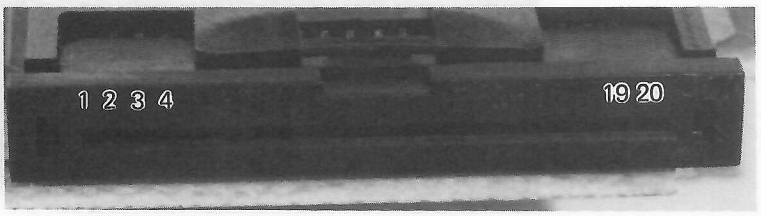

Fig. 2-12

Signal Pin No.	Signal	Signal Direction	Meaning of Signal
1	KSC 0	OUT	Keyboard column 0 scan
2	KSC 1	OUT	1
3	KSC 2	OUT	2
4	KSC 3	OUT	3
5	KSC 4	OUT	4
6	KSC 5	OUT	5
7	KSC 6	OUT	6
8	KSC 7	OUT	7
9	KPTN 9	IN	Keyboard return 9
10	KPTN 10	IN	10
11	KPTN 7	IN	7
12	KPTN 6	IN	6
13	KPTN 5	IN	5
14	KPTN 4	IN	4
15	KPTN 3	IN	3
16	KPTN 2	IN	2
17	KPTN 1	IN	1
18	KPTN 0	IN	0
19	$\overline{\text{PW SW}}$	IN	Power switch
20	$\overline{\text{BUSY}}$ (SO)	IN	LCD busy/serial data output

2.2.6 CN5 Connector (Keyboard Interface)

(a) Use: For connecting keyboard, LCD and piezoelectric buzzer control signals

(b) No. of pins: 20

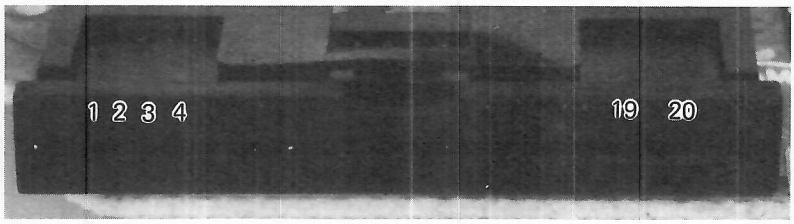

Fig. 2-13

Signal Pin No.	Signal	Signal Direction	Meaning of Signal
1	VCL	IN	LCD voltage (generated from VLD via view angle control circuit)
2			
3	R	OUT	Reset
4	C/$\overline{D}$	OUT	SI input mode designation command/data; SO/busy designation in read mode
5	CLK	OUT	Control timing ($\overline{ENABLE}$ signal)
6	SD	OUT	Display serial data/command
7	$\overline{SCK}$	OUT	Serial register shift clock to input or output in units of 8 bits
8	$\overline{CS5}$	OUT	Chip select 5 (Chip No. 5)
9	$\overline{CS4}$	OUT	Chip select 4 (Chip No. 4)
10	$\overline{CS3}$	OUT	Chip select 3 (Chip No. 3)
11	$\overline{CS2}$	OUT	Chip select 2 (Chip No. 2)
12	$\overline{CS1}$	OUT	Chip select 1 (Chip No. 1)
13	$\overline{CS0}$	OUT	Chip select 0 (Chip No. 0)
14	GND	–	Signal ground
15			
16			
17	VLD	OUT	LCD voltage
18	$\overline{PWSW}$	IN	Power switch
19	SP	OUT	Speaker signal
20	SPG	–	Speaker ground

2.2.7 CN6 Connector (Printer Interface)

(a) Use: Connecting for the built-in printer

(b) No. of pins: 20

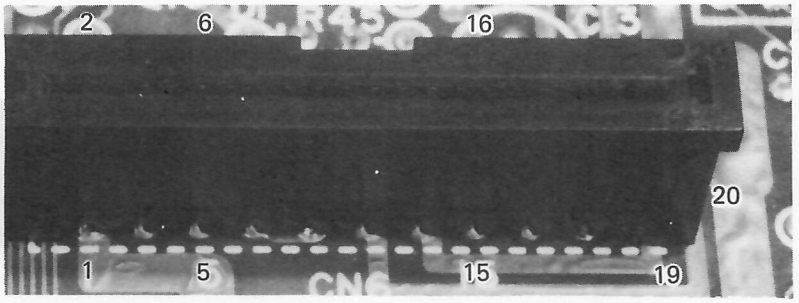

Fig. 2-14

Signal Pin No.	Signal	Signal Direction	Meaning of Signal
1	RSG	–	Reset signal ground
2			
3	RS	IN	Reset signal
4			
5	M –	–	Motor ground
6			
7	M +	–	Motor +5V
8			
9	SL	–	Head solenoid common (+5V)
10			
11	H4	OUT	Head solenoid 4 (Dot positions 109 to 144)
12			
13	H3	OUT	Head solenoid 3 (Dot positions 73 to 108)
14			
15	H2	OUT	Head solenoid 2 (Dot positions 37 to 72)
16			
17	H1	OUT	Head solenoid 1 (Dot positions 1 to 36)
18			
19	TS	IN	Timing signal
20	TSG	–	Timing signal ground

2.2.8 CN7 Connector (Expansion Unit Interface)

(a) Use: For connecting the expansion unit control signals and data lines

(b) No. of pins: 40

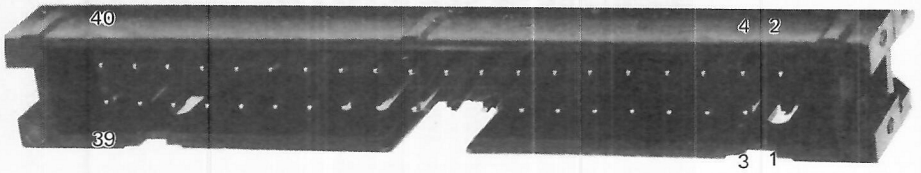

Fig. 2-15

Signal Pin No.	Signal	Signal Direction	Meaning of Signal
1	VB	–	+5V
2	$\overline{\text{NMI}}$	–	Unused
3	+5V	–	Logic voltage
4			
5	DATA 7	IN/ OUT	Data line 7
6	DATA 6	IN/ OUT	6
7	DATA 5	IN/ OUT	5
8	DATA 4	IN/ OUT	4
9	DATA 3	IN/ OUT	3
10	DATA 2	IN/ OUT	2
11	DATA 1	IN/ OUT	1
12	DATA 0	IN/ OUT	0
13	$\overline{\text{IOCS}}$	OUT	I/O chip select
14	VC	–	RAM backup voltage
15	ADDR 0	OUT	Address line 0
16	ADDR 1	OUT	1
17	ADDR 2	OUT	2

Signal Pin No.	Signal	Signal Direction	Meaning of Signal
18	ADDR 3	OUT	Address line 3
19	ADDR 4	OUT	4
20	ADDR 5	OUT	5
21	ADDR 6	OUT	6
22	ADDR 7	OUT	7
23	ADDR 8	OUT	8
24	ADDR 9	OUT	9
25	ADDR 10	OUT	10
26	ADDR 11	OUT	11
27	ADDR 12	OUT	12
28	ADDR 13	OUT	13
29	ADDR 14	OUT	14
30	ADDR 15	OUT	15
31	R	OUT	Reset
32	$\overline{\text{R}}$/W	OUT	Read write
33	$\overline{\text{R}}$ (RAM)	OUT	RAM reset
34	E	OUT	Enable signal
35	ROME	IN	ROM enable
36	INTEX	IN	External interrup- tion signal
37	GND	–	Signal ground
38			
39	C.G.	–	Case ground
40			

2.2.9 CN8 Connector (Microcassette)

Signals are routed via cable set 701 to connector CN8 on the MOSU circuit board.

(a) Use: For connecting the microcassette/ROM cartridge

(b) No. of pins: 14

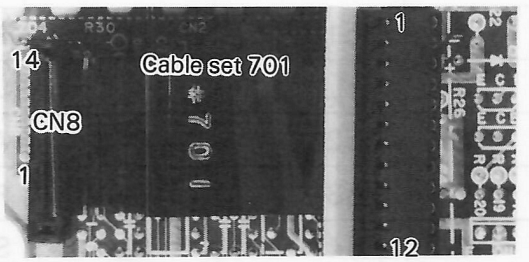

Fig. 2-16

Microcassette

CN8 Pin No.	Signal Pin No.	Signal		Signal Direction	Meaning of Signal
		Special Name	General Name		
13, 14	1	* 1 RD/WE	Si1	IN	Selected according to CLK value (Pin No. 4) CLK = 0 : RD Microcassette read data CLK = 1 : WE Accidental erasing prevention signal WE = 0 Write inhibit
11, 12	2	CNT/HSW	Si$\overline{o}$1	IN	Selected according to CLK value (Pin No. 4) CLK = 0 : CNT Rpm detection signal CLK = 1 : HSW Head switch, HSW = 0 (Head off)
10	3	WD	S$\overline{o}$1	OUT	Microcassette write data
9	4	CLK	Si$\overline{o}$2	OUT	Command set clock; RD/WE, CNT/HSW select signal
8	5	CMMND	Si$\overline{o}$3	OUT	Command serial data output
7	6	PWSW	Si$\overline{o}$4	OUT	*2 Power on-off switch
6	7	Vp		–	+5V (for microcassette mechanism drive)
5	8	MCMT/CNT	Mi1	IN	Power off: Microcassette or no microcassette { = 1 Microcassette { = 0 No microcassette Power on: Rpm detection signal is input.
4	9		M$\overline{o}$2	OUT	Unused
3	10		M$\overline{o}$1	OUT	Unused
2	11	GND		–	Ground
1	12	VL		–	+5V (for write read circuit, selector, instruction register)

CN8 Connector (ROM Cartridge)

CN8 Pin No.	Signal Pin No.	Signal	Signal Direction	Meaning of Signal
13, 14	1	Si1	IN	ROM cassette judging input (always 0)
11, 12	2	Si$\overline{o}$1	IN	ROM cassette judging input (always 0)
10	3	S$\overline{o}$1		Unused
9	4	Si$\overline{o}$2	OUT	Address counter clear
8	5	Si$\overline{o}$3	OUT	ROM power on
7	6	Si$\overline{o}$4	OUT	Shift register clear (0 : Clear)
6	7	V_B		Battery power
5	8	Mi1	IN	Shift register output
4	9	M$\overline{o}$2	OUT	Shift register clock input
3	10	M$\overline{o}$1	OUT	Counter input ( ) Shift register Shift/$\overline{LOAD}$ switching
2	11	G		Ground
1	12	+5V		5V power (supplied when switch is on)

2.2.10 CN9 Connector (Battery Connector)

(a) Use: For connecting rechargeable battery cable

(b) No. of pins: 2

Signal Pin No.	Signal	Meaning of Signal
1	+V_B	Battery positive (+5V)
2	–V_B	Battery negative (GND)

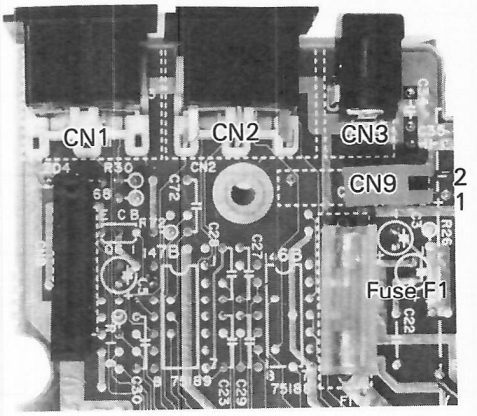

Fig. 2-17

2.2.11 KCN1 Connector (KB ↔ LCD Interface)

(a) Use: Signal connector for exchanging data with LCD

(b) No. of pins: 14

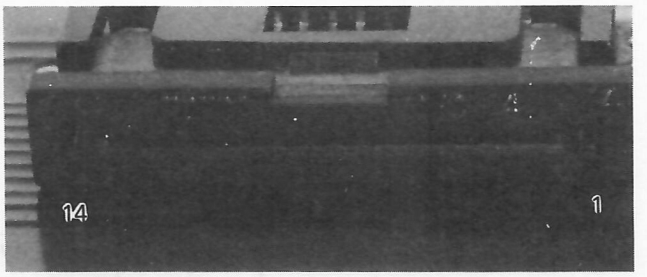

Fig. 2-18

Signal Pin No.	Signal	Signal Direction	Meaning of Signal
1	GND	–	Signal ground
2	$\overline{CS0}$	Outgoing	Chip select 0 (Chip No. 0)
3	$\overline{CS4}$	Outgoing	Chip select 4 (Chip No. 4)
4	$\overline{CS2}$	Outgoing	Chip select 2 (Chip No. 2)
5	$\overline{CS1}$	Outgoing	Chip select 1 (Chip No. 1)
6	$\overline{CS3}$	Outgoing	Chip select 3 (Chip No. 3)
7	$\overline{CS5}$	Outgoing	Chip select 5 (Chip No. 5)
8	RESET	Outgoing	Reset signal
9	CLK	Outgoing	Control timing ($\overline{ENABLE}$ signal)
10	C/$\overline{D}$	Outgoing	SD input mode designation command/data, SO/busy designation in read mode
11	SD	Incoming	Display serial data/command
12	$\overline{SCK}$	Outgoing	Serial register shift clock
13	$\overline{BUSY}$/(SO)	Outgoing	Serial output/serial transfer permit signal (Busy)
14	Vcc	Outgoing	LCD voltage

2.2.12 KCN2 Connector (Piezoelectric Speaker Connector)

(a) Use: For supplying built-in speaker drive signal

(b) No. of pins: 2

Signal Pin No.	Signal	Meaning of Signal
1	Speaker ground	Speaker ground (SPG)
2	Speaker signal	Speaker signal (SP)

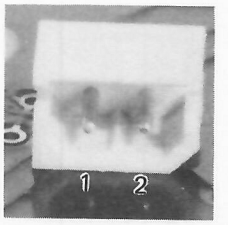

Fig. 2-19

2.3 Interface Cables

2.3.1 Cable Connection Diagram

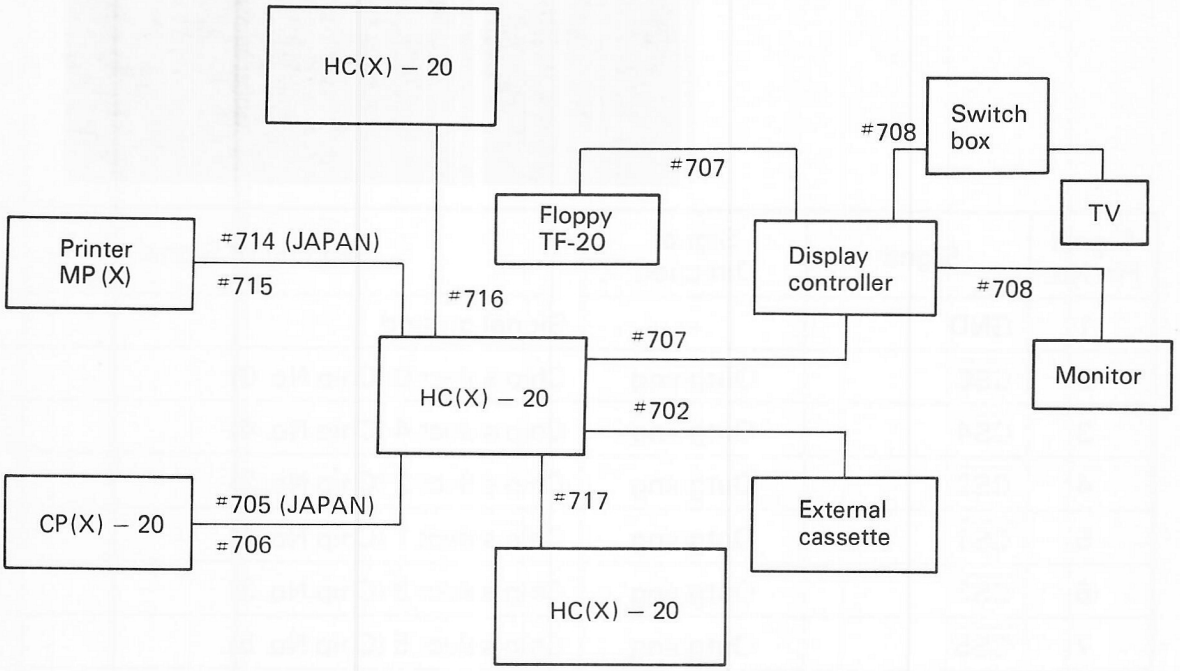

Fig. 2-20

Cable Set No.	Connection	Part No.	Connector
#702	HC (X)-20 ←→ External cassette	Y201302000	With two adaptors for 3.5ϕ plug, 2.5ϕ plug
#705	HC-20 ←→ CP-20	Y201305000	DIN 8-pin, Canon 25-pin (Japan only)
#706	HX-20 ←→ CX-20	Y201306000	DIN 8-pin, Canon 25-pin
#707	HC (X)-20 ←→ DISPLAY CONTR. / DISPLAY CONTR. ←→ TF-20	Y201307000	DIN 5-pin, DIN 6-pin
#708	DISPLAY CONTR. ←→ MONITOR (TV)	Y201308000	Coaxial cable * In case of TV, connect via switch box.
#714	HC-20 ←→ PRINTER	Y201309000	DIN 8-pin, Canon 25-pin (Japan only)
#715	HX-20 ←→ PRINTER	Y201310000	DIN 8-pin, Canon 25-pin
#716	HC (X)-20 ←→ HC (X)-20	Y201311000	DIN 8-pin, DIN 8-pin
#717	HC (X)-20 ←→ HC (X)-20	Y201312000	DIN 5-pin, DIN 5-pin

2.3.2 Cable Set No. 702 (with two 2.5ϕ jack adaptors)

(a) Use: For connecting HC (X)-20 to external cassette

(b) Plugs: 3.5 (white, red), 2.5ϕ (black)

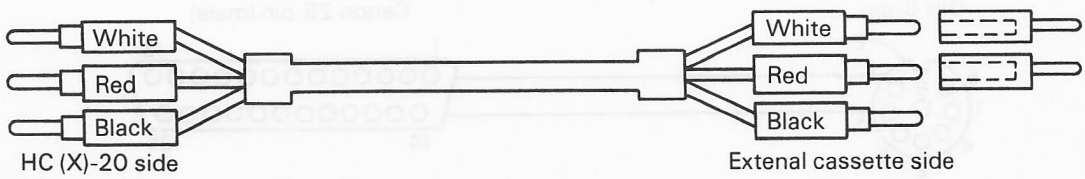

Fig. 2-21

Connecting Method

Connect the HC (X)-20 to an external cassette as shown in the diagram.

- When an input jack of an external cassette is 2.5ϕ, use the supplied jack adaptor .

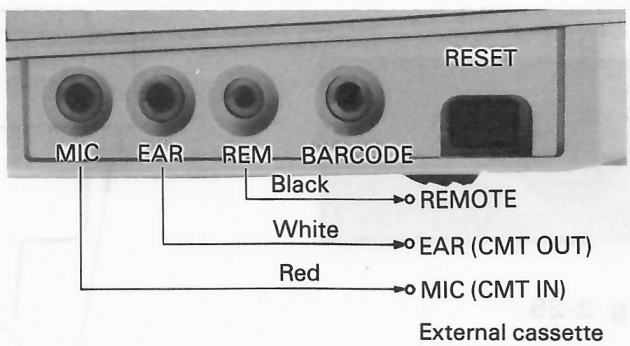

Fig. 2-22

Signals

Signal Pin		Signal
White	1	Shield
	2	Input (IN)
Red	1	Shield
	2	Output (OUT)
Black	1	Remote
	2	Remote

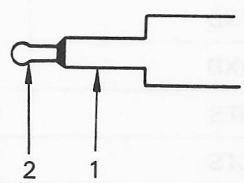

Fig. 2-23

2.3.3 Cable Set No. 705 (Japan)/No. 706 (U.S.A.)

(a) Use: For connecting the HX-20 to coupler (CX-20)

(b) Connectors: HX-20 – DIN 8-pin
CX-20 – Canon 25-pin (male)

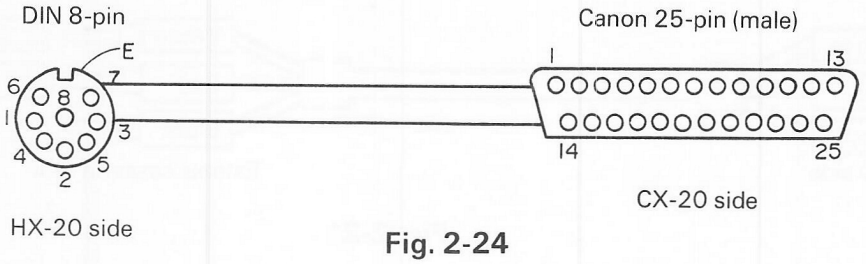

Fig. 2-24

Connecting Method

Engage the DIN connector with the RS-232C interface on the HX-20 proper, and the Canon connector with the interface connector on the CX-20.

Tighten the 2 screws on the Canon connector to fasten it to the CX-20.

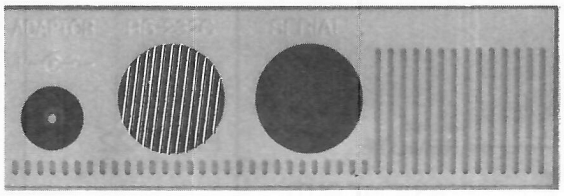

Fig. 2-25

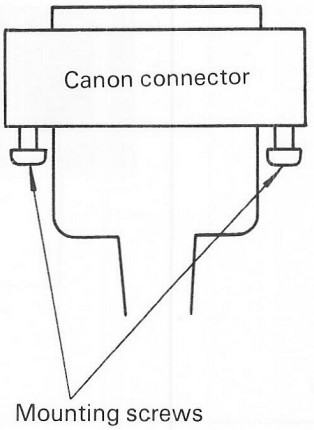

Fig. 2-26

Signals

DIN 8-pin

No.	Signal	Color
1	SG (Signal ground)	Black
2	TXD	Red
3	RXD	Gray
4	RTS	Yellow
5	CTS	Green
6	DSR	Brown
7	DTR	Blue
8	CD	White
E	FG (CG)	(Shield)

DIN 8-pin

No.	Signal	Color
1	FG (CG)	(Shield)
2	TXD	Red
3	RXD	Gray
4	RTS	Yellow
5	CTS	Green
6	DSR	Brown
7	SG (Signal ground)	Black
8	CD	White
9 ~ 19	Unused	–
20	DTR	Blue
21 ~ 25	Unused	–

2.3.4 Cable Set No. 707

(a) Use: For connecting the HX-20 with display controller; and display controller with terminal floppy

(b) Connectors: HX-20 (DIN 5-pin) – Display controller (DIN 6-pin)
Display controller (DIN 5-pin) – Terminal floppy (DIN 6-pin)

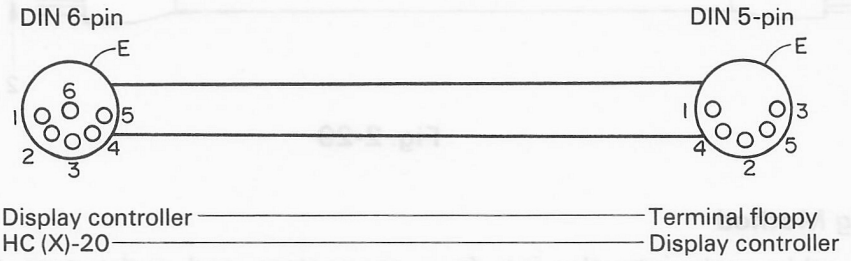

Fig. 2-27

Connecting Method

Engage the DIN connectors on both ends with the interface connectors.

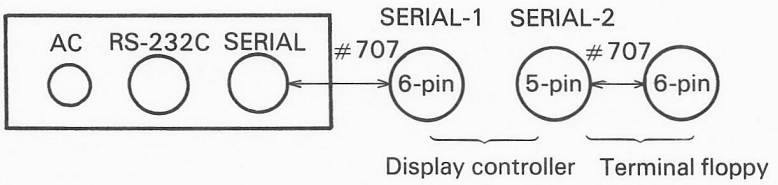

Fig. 2-28

Signals

DIN 6-pin

No.	Signal	Color
1	$\overline{PRX}$	White
2	PIN	Green
3	$\overline{PTX}$	Red
4	POUT	Yellow
5	SG (Signal ground)	Black
6	Unused	–
E	FG (CG)	(Shield)

DIN 5-pin

No.	Signal	Color
1	SG (Signal ground)	Black
2	$\overline{PTX}$	Red
3	$\overline{PRX}$	White
4	POUT	Yellow
5	PIN	Green
E	FG (CG)	(Shield)

2.3.5 Cable Set No. 708

(a) Use: For connecting the display controller with monitor or TV switch box.

(b) Connectors: RCA pin plug

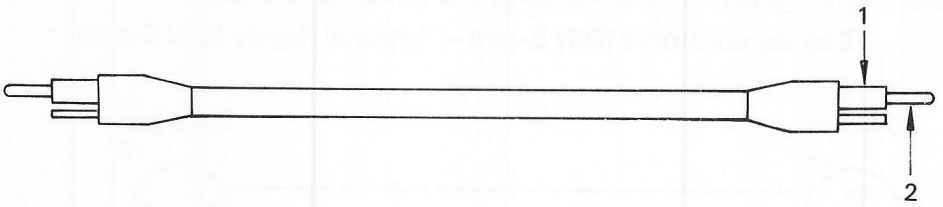

Fig. 2-29

Connecting Method

Insert the cable ends into the interface connectors and make sure that the shielded parts shown in Fig. 1 are in the connectors.

Signals

No.	Signal
1	FG (CG)
2	RF OUT

2.3.6 Cable Set No. 714 (Japan)/No. 715 (U.S.A)

(a) Use: For connecting the HX-20 with terminal printer

(b) Connectors: HX – DIN 8-pin
Terminal printer – Canon 25-pin (male)

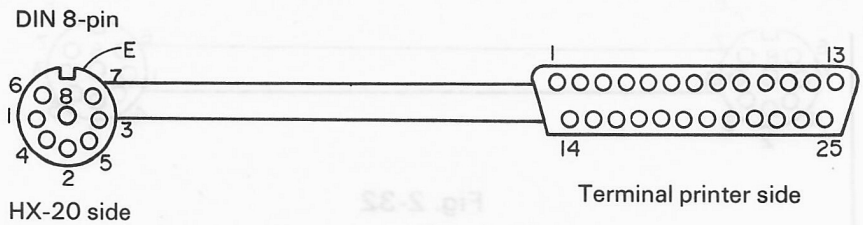

Fig. 2-30

Connecting Method

Insert the DIN connector with the RS-232C interface on the HX-20 proper, and the Canon connector with the interface connector on the terminal printer.

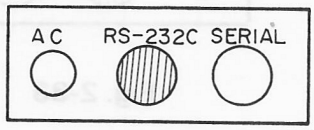

Fig. 2-31

Signals

DIN 8-pin

No.	Signal	Color
1	SG (Signal ground)	Black
2	TXD	Red
3	RXD	White
4	RTS	Brown
5	CTS	Brown
6	DSR	Yellow
7	DTR	Green
8	CD	Blue
E	FG (CG)	(Shield)

Canon 25-pin

No.	Signal	Color
1	FG (CG)	(Shield)
2	RXD	White
3	TXD	Red
4	Unused	Blue
5	Unused	Blue
6	DTR	Green
7	SG (Signal ground)	Black
8	Unused	Brown
9 ~ 19	Unused	–
20	DSR	Yellow
21 ~ 25	Unused	–

* Pins 4 and 5 of the DIN connectors are connected to each other in the connectors and to Pin 8 of the mated connector.

CHAPTER 3
THEORY OF OPERATION OF HX-20

3.1 Power Supply 3- 1
- 3.1.1 Power Block 3- 1
- 3.1.2 Backup Circuit 3- 1
- 3.1.3 Power Circuit 3- 3
- 3.1.4 Power On 3- 4
- 3.1.5 Reset Circuit 3- 4
- 3.1.6 Reset Signal Circuit 3- 5
- 3.1.7 Voltage Detector Circuit 3- 6
- 3.1.8 Power On Timing 3- 8
- 3.1.9 Power Off 3- 9
- 3.1.10 RS-232C Voltage 3-11
- 3.1.11 LCD Voltage Circuit 3-13
- 3.1.12 Power Signals 3-14

3.2 CPU Operation 3-16
- 3.2.1 Main CPU/Slave CPU 3-16
- 3.2.2 CPU Timing 3-16
- 3.2.3 Address Data Buses 3-17
- 3.2.4 Initializing 3-18
- 3.2.5 Sleep Mode 3-21
- 3.2.6 Memory Map 3-24
- 3.2.7 Interruption Control 3-27
- 3.2.8 Main CPU Interruption Table 3-28
- 3.2.9 Slave CPU Interruption Table 3-29

3.3 Address Control Circuit 3-30
- 3.3.1 Memory Addressing 3-30
- 3.3.2 Address Control Signals 3-30
- 3.3.3 RAM Address Circuit 3-32
- 3.3.4 I/O Select 3-33
- 3.3.5 Clock Circuit 3-33
- 3.3.6 Dip Switch 3-34

3.4 Micro Printer (Model-160) 3-35
- 3.4.1 Outline of Mechanisms 3-35
- 3.4.2 Transmission Mechanism 3-36
- 3.4.3 Detecting Machanism 3-37
- 3.4.4 Printing Mechanism 3-37
- 3.4.5 Paper Feeding Mechanism 3-40
- 3.4.6 Ribbon Feeding Mechanism 3-42
- 3.4.7 Printing Operation One Print Cycle 3-43
- 3.4.8 Terminal Contact Arrangement 3-46
- 3.4.9 Control Circuit 3-47
- 3.4.10 Printing Start 3-47
- 3.4.11 Print Timing 3-48
- 3.4.12 Heads and Printing Positions 3-48

3.4.13 Example of Printing 3-49
3.4.14 Character Generators 3-50
3.4.15 Printing Process 3-51
3.4.16 Printing End 3-51
3.5 Liquid Crystal Display 3-52
3.5.1 Hardware Composition 3-52
3.5.2 Liquid Crystal Panel 3-54
3.5.3 Theory of Operation of Liquid Crystal Panel 3-54
3.5.4 Display Control 3-55
3.5.5 Display Initialization 3-56
3.5.6 Display Data Transfer 3-57
3.5.7 Data Read 3-58
3.5.8 Control Circuit 3-60
3.5.9 Voltage Control Circuit 3-62
3.5.10 Voltage Dividing Circuit 3-62
3.5.11 Example of Display Timing 3-63
3.6 Keyboard 3-64
3.6.1 Hardware Composition 3-64
3.6.2 Key Switches 3-64
3.6.3 Key Switch Signal Input 3-65
3.6.4 Power Switch 3-68
3.6.5 Piezo-electric Buzzer Connector 3-68
3.6.6 LCD Signal Circuit 3-68
3.6.7 Keyboard Switch Construction 3-68
3.6.8 Key Switch Code 3-69
3.6.9 Keyboard Connector Signals 3-70
3.6.10 Keyboard Layout 3-71
3.7 RS-232C Interface 3-72
3.7.1 Power On 3-72
3.7.2 Interface Circuit 3-73
3.7.3 Operation Sequence 3-74
3.7.4 RS-232C Operation Timing 3-75
3.7.5 Operation Where Modem (Coupler) Is Used 3-76
3.7.6 Data Transfer between HX-20s 3-77
3.7.7 Connection to Printer (EPSON Printer) 3-78
3.8 Serial Interface 3-78
3.8.1 Operation Control 3-78
3.8.2 Interface Operation 3-79
3.8.3 Data Transfer Between HX-20s 3-79
3.8.4 Connection to Display Controller or Terminal Floppy 3-80
3.9 External Cassette Interface 3-80
3.9.1 Operation Control 3-80
3.9.2 Motor Control Circuit 3-80
3.9.3 External Cassette Connection 3-81
3.9.4 Read/Write Signals 3-81
3.9.5 Data Read 3-82
3.9.6 Data Write 3-82

3.1 Power Supply

3.1.1 Power Block

The power supply consists a fuse, zener diode for protection from overvoltage, rechargeable batteries, charging circuit, voltage detector circuit, RS-232C voltage circuit, and LCD voltage circuit as shown in the block diagram below.

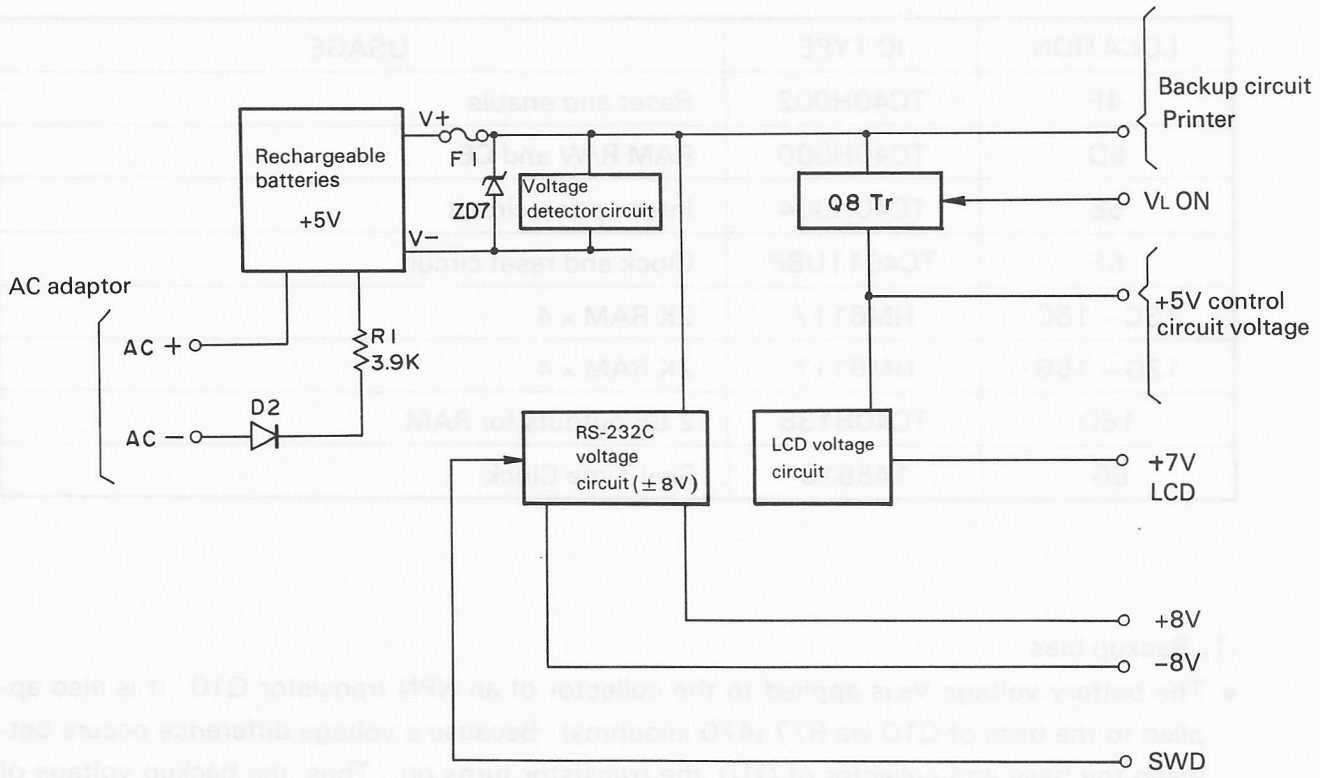

Fig. 3-1

(1) Fuse/zener diode: For protection from overcurrent and overvoltage.
(2) Rechargeable batteries: +5V batteries with capacity of approximately 1100 mAH.
(3) Voltage detector circuit: If the voltage drops below +4.5V, this circuit sends a $\overline{\text{POWER ABNORMAL}}$ signal to notify of its detection of battery voltage drop below the required level.
(4) RS-232C voltage circuit: This circuit generates ± 8V from the +5V.
(5) LCD voltage circuit: This circuit generates a voltage of approximately +7V for LCD from the +5V.

3.1.2 Backup Circuit

The backup circuit constantly supplies a drive voltage to the ICs that are used for protecting the data stored in the RAMs and keeping the power on circuit and reset circuit in operating condition regardless of whether power is on or off.

The elements that are backed up by the batteries are as follows:

LOCATION	IC TYPE	USAGE
4F	TC40H002	Reset and enable
5D	TC40H000	RAM R/W and CE
5E	TC40H004	Interruption circuit
5F	TC4011UBP	Clock and reset circuit
13C ~ 16C	HM6117	2K RAM × 4
12G ~ 15G	HM6117	2K RAM × 4
16D	TC40H138	2 CE outputs for RAM
6G	146818	Real Time Clock

(1) Backup bias

- The battery voltage V_B is applied to the collector of an NPN transistor Q10. It is also applied to the base of Q10 via R77 (470 kiloohms). Because a voltage difference occurs between the base and collector of Q10, the transistor turns on. Thus, the backup voltage of approximately +3V is supplied to the RAMs and some of the elements at all times.
  The reset switch is connected to the base of transistor Q10 and to the batteries via resistor R26 so that, when the reset switch is pressed, the backup voltage is forcibly output.
- If power is turned on normally, transistor Q7 is turned on by a $\overline{V_L ON}$ signal to output a voltage of approximately +5V so the backup from transistor Q10 is ignored and the +5V drive voltage is supplied.

3.1.3 Power Circuit

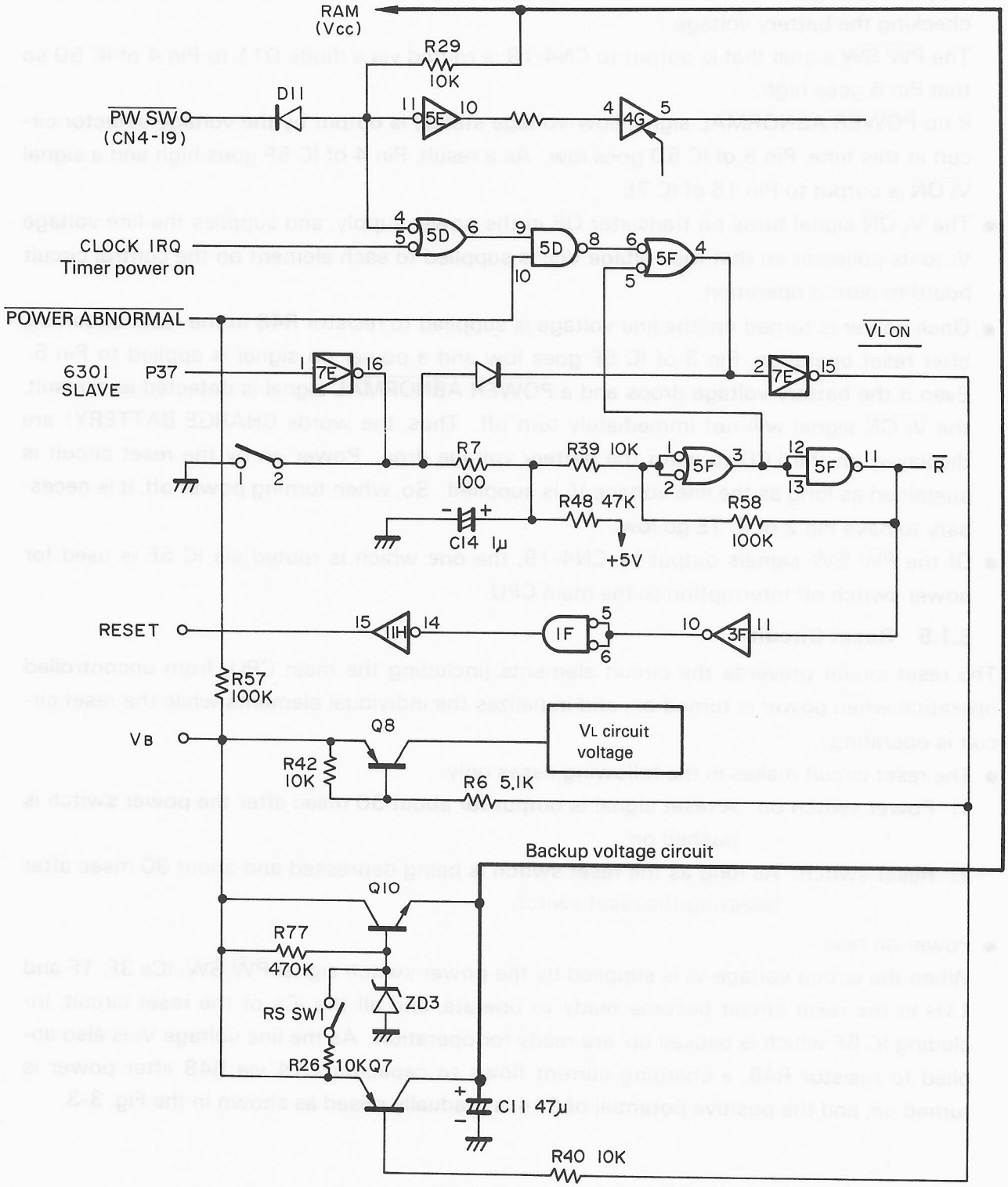

Fig. 3-2

3.1.4 Power On

When the power switch is pushed on, a $\overline{\text{PW SW}}$ (power switch) signal is output from the keyboard to two points, i.e., CN4-19 and CN5-18.

- The $\overline{\text{PW SW}}$ signal which is applied to CN5-18 turns transistor Q1 in the power supply to supply a voltage Vcc to IC 2B to operate the voltage detector circuit. This operation is for checking the battery voltage.
  The $\overline{\text{PW SW}}$ signal that is output to CN4-19 is routed via a diode D11 to Pin 4 of IC 5D so that Pin 6 goes high.
  If no $\overline{\text{POWER ABNORMAL}}$ signal (low-voltage status) is output by the voltage detector circuit at this time, Pin 8 of IC 5D goes low. As a result, Pin 4 of IC 5F goes high and a signal $\overline{\text{V}_\text{L}\text{ ON}}$ is output to Pin 15 of IC 7E.
- The $\overline{\text{V}_\text{L}\text{ ON}}$ signal turns on transistor Q8 in the power supply, and supplies the line voltage V_L to its collector so that the voltage Vcc is supplied to each element on the control circuit board to permit operation.
- Once power is turned on, the line voltage is supplied to resistor R48 in the reset circuit so, after reset operation, Pin 3 of IC 5F goes low and a power on signal is applied to Pin 5. Even if the battery voltage drops and a $\overline{\text{POWER ABNORMAL}}$ signal is detected as a result, the $\overline{\text{V}_\text{L}\text{ ON}}$ signal will not immediately turn off. Thus, the words CHARGE BATTERY! are displayed on the LCD to warn the battery voltage drop. Power on by the reset circuit is sustained as long as the line voltage V_L is supplied. So, when turning power off, it is necessary to have Pin 2 of IC 7E go low.
- Of the $\overline{\text{PW SW}}$ signals output by CN4-19, the one which is routed via IC 5E is used for power switch off interruption to the main CPU.

3.1.5 Reset Circuit

The reset circuit prevents the circuit elements (including the main CPU) from uncontrolled operation when power is turned on, and initializes the individual elements while the reset circuit is operating.

- The reset circuit makes in the following cases only.
  1) Power switch on: A reset signal is output for about 30 msec after the power switch is pushed on.
  2) Reset switch: As long as the reset switch is being depressed and about 30 msec after releasing the reset switch.
- Power on reset
  When the circuit voltage V_L is supplied by the power switch signal $\overline{\text{PW SW}}$, ICs 3F, 1F and 11H in the reset circuit become ready to operate, and all the ICs of the reset circuit, including IC 5F which is backed up, are ready for operation. As the line voltage V_L is also applied to resistor R48, a charging current flows to capacitor C14 via R48 after power is turned on, and the positive potential of C14 is gradually raised as shown in the Fig. 3-3.

The delay time till the positive potential of C14 exceeds the threshold level of IC 5F is used as a reset signal.

- Reset switch
  If the reset switch is pressed, the positive side of C14 is forced to ground level. Thus, a reset signal is output as long as the reset switch is being depressed and till C14 begins to be recharged again after the reset switch is released.

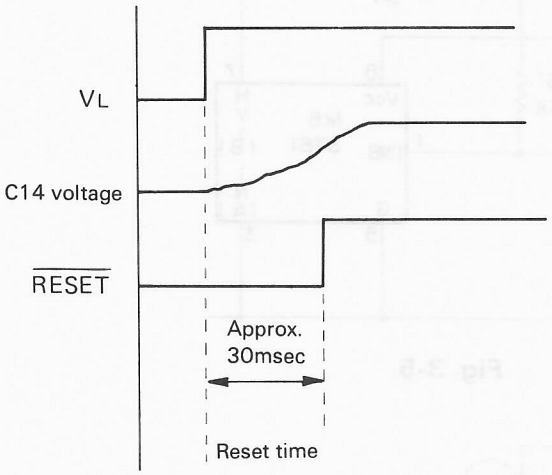

Fig. 3-3

3.1.6 Reset Signal Circuit

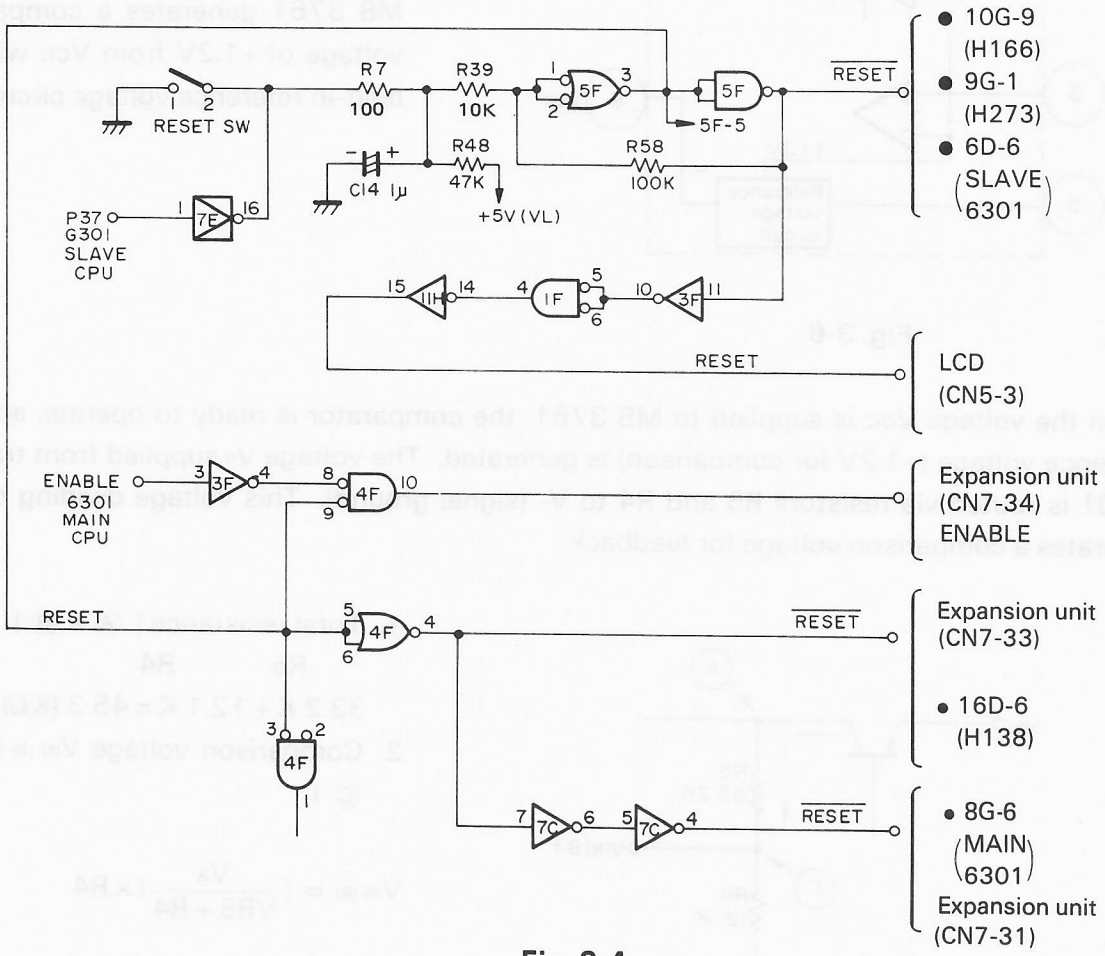

Fig. 3-4

A reset signal is output only when power is turned on or when the reset switch is pressed. The reset signal output to the control circuit board, LCD unit, and extension units initializes the control circuit (and the control program) to prevent erroneous operation.

3.1.7 Voltage Detector Circuit

When the power switch is pushed on, the $\overline{\text{PW SW}}$ signal turns transistor Q1 on to supply the voltage V_B to the Vcc of 2B (MB 3761), making MB 3761 ready for voltage detection.

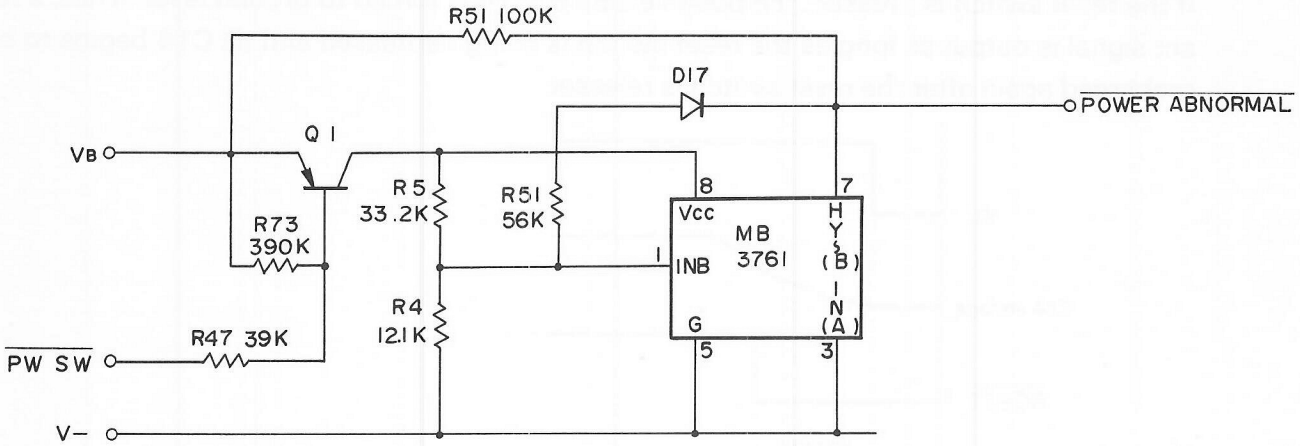

Fig. 3-5

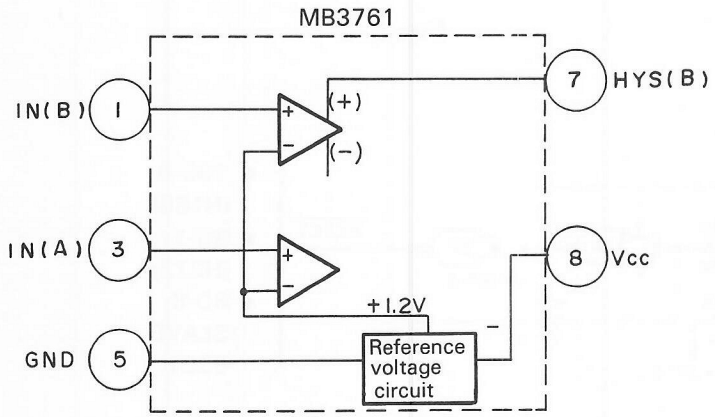

MB 3761 generates a comparison voltage of +1.2V from Vcc with its built-in reference voltage circuit.

Fig. 3-6

When the voltage Vcc is supplied to MB 3761, the comparator is ready to operate, and the reference voltage (+1.2V for comparison) is generated. The voltage V_B supplied from transistor Q1 is routed via resistors R5 and R4 to V- (signal ground). This voltage dividing circuit generates a comparison voltage for feedback.

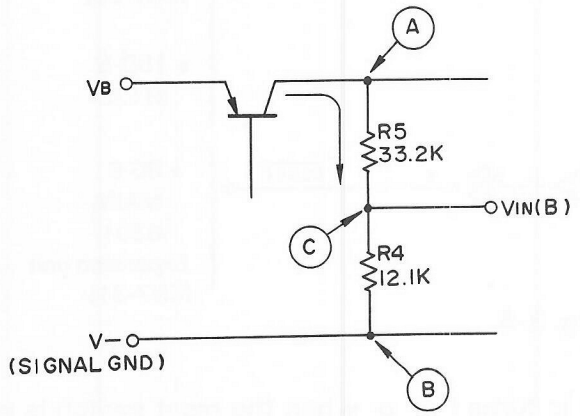

Fig. 3-7

1. Total resistance (Ⓐ – Ⓑ)

   R5 R4

   $33.2\,K + 12.1\,K = 45.3\,(K\Omega)$

2. Comparison voltage $V_{IN\,(B)}$ (Point Ⓒ)

$$V_{IN\,(B)} \fallingdotseq \left(\frac{Vx}{VR5 + R4}\right) \times R4$$

$$\fallingdotseq \left(\frac{Vx\,(V)}{45.3\,(K\Omega)}\right) \times 12.1\,(K\Omega)$$

The comparator MB 3761 compares the input voltage $V_{IN\ (B)}$ with the reference voltage +1.2V, and outputs the result to Pin 7 (HYS (B)).

Condition	Pin 7 output	Meaning
$V_{IN\ (B)} > +1.2V$	HIGH	Normal voltage
$V_{IN\ (B)} < +1.2V$	LOW	Voltage too low

$V_{IN\ (B)}$ of +1.2V is the limit in abnormal voltage (voltage drop) detection so the bettery voltage in this case can be calculated by the following equation.

$$V_{B\ (X)} = \frac{1.2}{\frac{R4}{R5 + R4}} \qquad \left(V_{B\ (x)} \times \frac{R4}{R5 + R4} = 1.2\ (V)\ REF \right)$$

$$= \frac{45.3 \times 1.2}{12.1}$$

$$= \underline{\underline{4.5\ (V)}}$$

As shown above, +4.5V is the abnormal voltage detecting point.
When the battery voltage falls below +4.5V, the Pin 7 output of the comparator MB 3716 goes low ($\overline{\text{POWER ABNORMAL}}$), and this signal is sent to IRQ (Interrupt Request) and P14 of the main CPU. Upon detection of interruption by the $\overline{\text{POWER ABNORMAL}}$ signal, the CPU immediately stops operaion, flashes the warning CHARGE BATTERY! on the LCD screen about 60 times, and automatically turns power off.

Note:

The batteries discharge current until the voltage reaches + 4.0V so that, even if an abnormal voltage is detected, the data stored in the RAMs are kept unless some trouble occurs. It is necessary to recharge the batteries as soon as possible if the voltage drops to that level because, if the batteries are kept in that state for a long time, the voltage further drops, resulting in breakdown of the data stored in the RAMs and a shorter battery life.

- Overvoltage is not detected, but if an overvoltage (above 6.8V) occurs, zener diode ZD7 is shorted so its protect the circuits.

3.1.8 Power On Timing

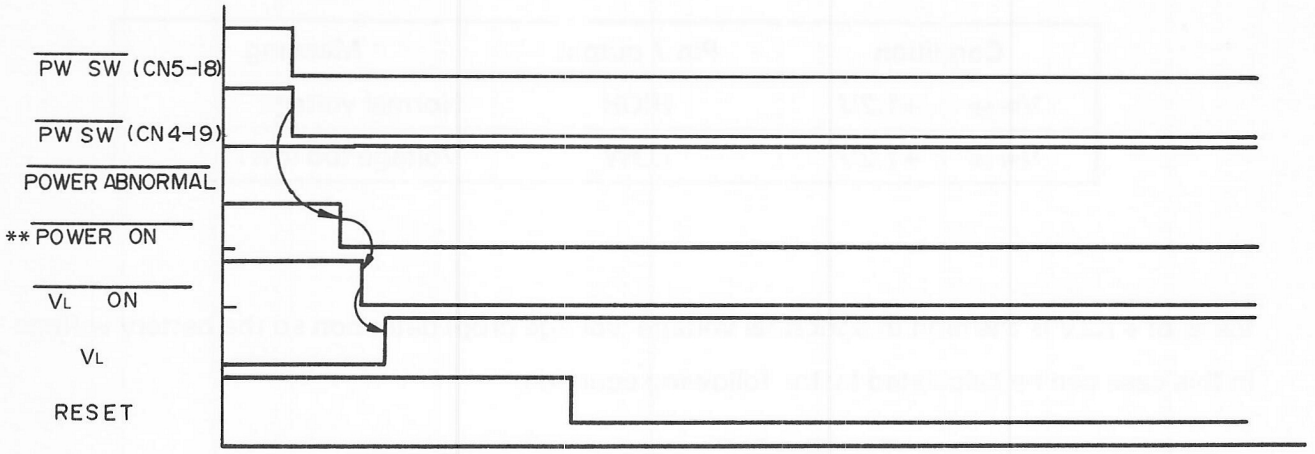

Normal Case

Fig. 3-8

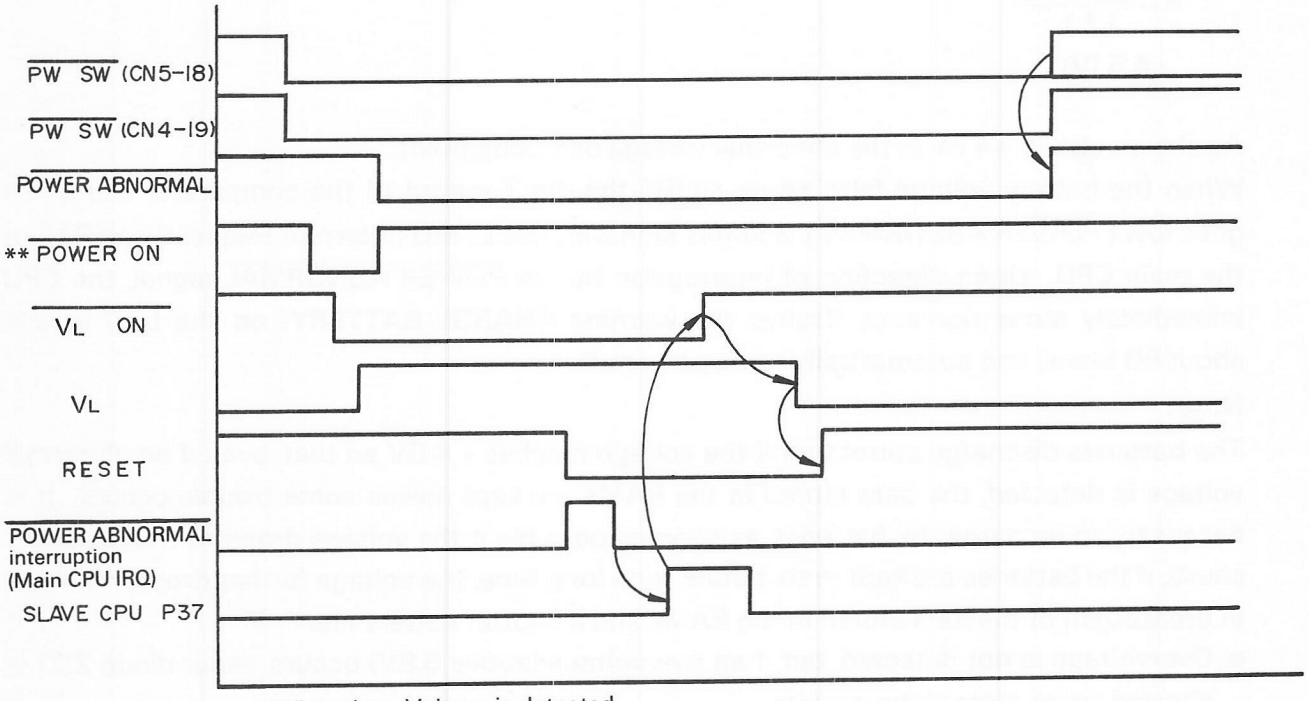

Where Low Voltage is detected

Fig. 3-9

*The warning CHARGE BATTERY! flashes 60 times on the LCD screen from the detection of a $\overline{\text{POWER ABNORMAL}}$ signal till $\overline{\text{VL ON}}$ is off.

**$\overline{\text{POWER ON}}$ is output signal of IC5D PIN8.

3.1.9 Power Off

Power can be turned off by any of the following three methods.

1) Push the power switch off: Normal power off.
2) Push the power switch off and then press the reset switch:
   Power off in case of abnormal voltage drop or uncontrolled program execution.
3) Power is automatically turned off by the program after 30 seconds of voltage drop display CHARGE BATTERY!: Power off by program.

(1) Power off with power switch

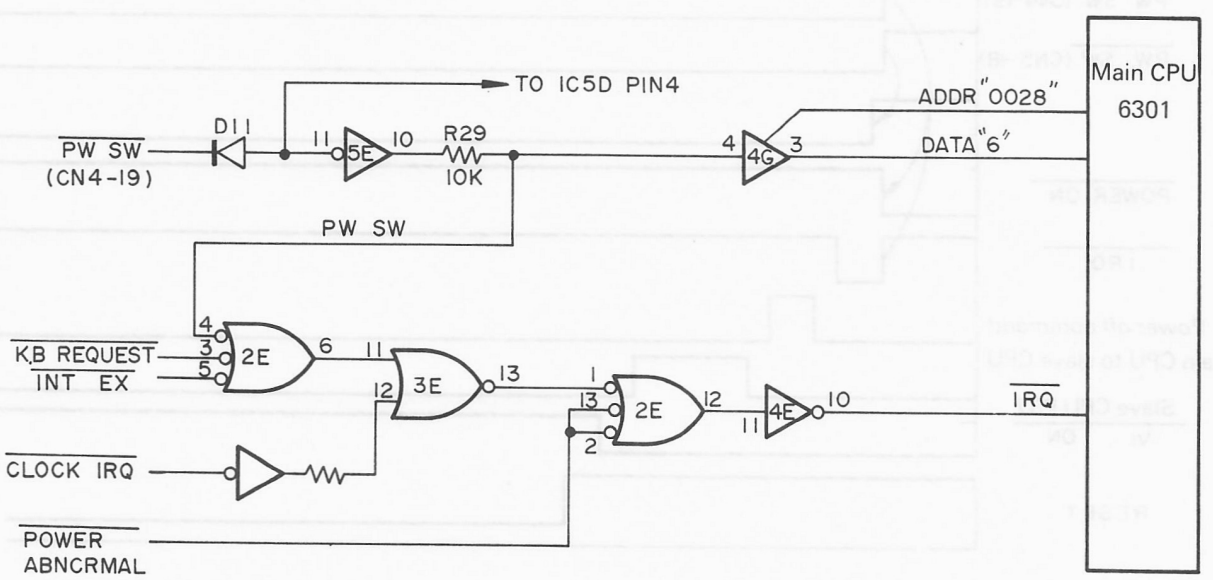

Fig. 3-10

When the power switch is pushed off, a $\overline{\text{PW SW}}$ (CN 5 - 18) signal goes out to turn off transistor Q1 in the power circuit so Vcc is no longer supplied to IC 2B (MB 3761), and the voltage detector circuit becomes ineffective.

A $\overline{\text{PW SW}}$ (CN4-19) signal is applied to Pin 4 of IC 5D so that the output $\overline{\text{POWER ON}}$ signal from Pin 8 of IC5D goes out. But $\overline{\text{VL ON}}$ cannot be turned off because of the reset signal from the reset circuit which is connected to Pin 5 of IC 5F. Therefore, power is turned off by program interruption. This circuit sends a $\overline{\text{PW SW}}$ signal to Pin 4 of IC 2E via IC 5E and R29. When the power switch is pushed off, Pin 4 of IC 2E goes low so that Pin 6 of IC 2E goes high, Pin 13 of IC 3E goes high, Pin 12 of IC 2E goes high, and Pin 10 of IC 3R goes low.

As a result, an $\overline{\text{IRQ}}$ signal (I/O request) is sent to request an interruption to the CPU. When the main CPU accepts the interruption, ports 13, 14 and 15 and I/O address 0028 are checked, and the kind of interruption is identified. In case of an interruption by the power switch ($\overline{\text{PW SW}}$), a 0028 output is sent to an address bus line, and an output is generated from Pin 11 of IC 9E (for I/O select) so the $\overline{\text{PW SW}}$ line signal is read from Pin 5 of IC 4G to data line 6.

Through the process described above, the main CPU confirms that the power switch is off, and gives a power off command to the slave CPU. When the slave CPU receives the power off command, port 37 of the built-in program is set to high level, and Pin 16 of IC 7E to low level.

As a result, Pin 2 of IC 7E goes low via IC 5F of reset circuit, causing Pin 15 to go high and turning the $\overline{V_L ON}$ signal off.

When the $\overline{V_L ON}$ is off, power transistor Q8 turns off to stop supplying the logic voltage V_L. When the logic voltage V_L is no longer supplied, R48 in the reset circuit is not pulled up and the output from Pin 3 of IC 5F goes high. At this point of time, the power on signal to Pin 4 of IC 5F is turned off, thus, completing the power off operation.

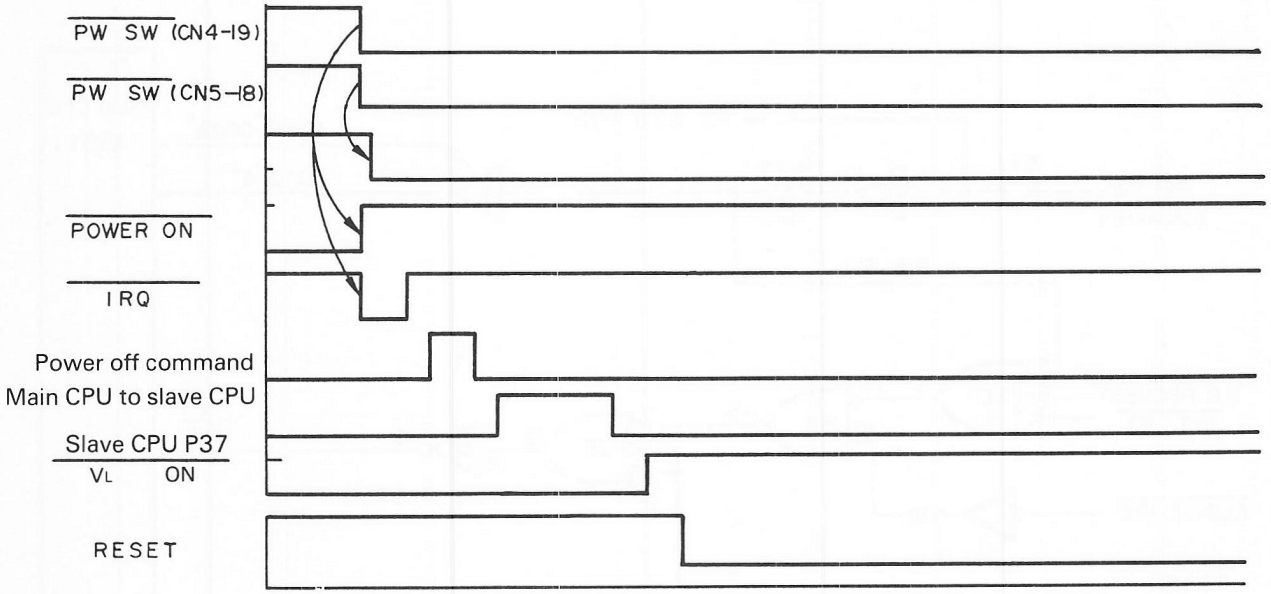

Fig. 3-11

(2) Power off with reset switch

Normally, power can be turned off by pushing the power switch off. In the following cases, however, power cannot be turned off by simply pushing the power switch.

In these cases, push the power switch off and then press the reset switch to turn power off.

- An interrupt request cannot be processed due to uncontrolled run of the main CPU program.
- An element failure has occurred in the $\overline{IRQ}$ signal line, RESET line, $\overline{PW\ SW}$ (CN4-19) signal line, main CPU or slave CPU.

Push the power switch off, and then press the reset switch. PIN5 of IC 5F goes high, so the $\overline{V_L ON}$ signal is turned off and the line voltage V_L is no longer supplied. Thus, power can be cut off. The reset switch is also connected to the voltage backup circuit in the power supply, and when the reset switch is pressed, transistor Q10 turns on compulsorily.

(3) Power off by program

If the voltage detector circuit detects a battery voltage drop below +4.5V, it sends a $\overline{\text{POWER ABNORMAL}}$ signal to the main CPU for program interruption. When the main CPU accepts this interruption, the warning CHARGE BATTERY! is flashed 60 times on the LCD screen, and a power off command is sent to the slave CPU. Port 37 of the slave CPU goes high to turn the $\overline{V_L \text{ ON}}$ signal off and power off. Even if the power switch is in the on position, the voltage detector circuit keeps sending a $\overline{\text{POWER ABNORMAL}}$ signal to hold Pin 10 of IC 5D in the power on circuit at low level, making the $\overline{\text{PW SW}}$ (CN4-19) signal ineffective. This prevents power from turning on again.

It is necessary, nevertheless, to push the power switch off because, unless it is in the off position, the batteries keep supplying the voltage to IC 2B and lose their stored charge.

3.1.10 RS-232C Voltage

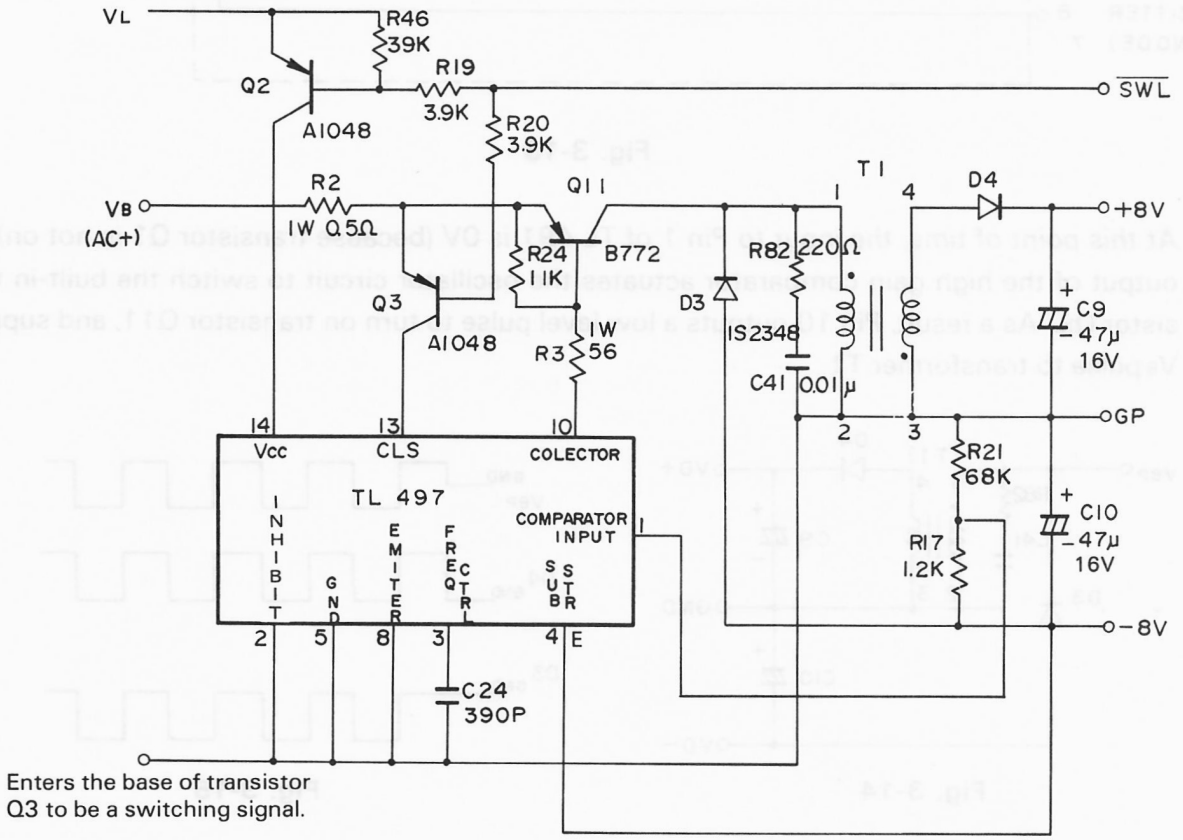

Fig. 3-12

- The built-in batteries keep supplying the DC voltage of 4.5 to 6.0V. The ± 8V is used only in data transfer with the serial interface or RS-232C. To minimize battery consumption, the system is designed to generate the ± 8V only when it is used.
- Voltage output

  If the power switch is on and normal power on reset operation is executed, the line voltage V_L is supplied. If an operation starts in the RS-232C mode (data communication using the output to the external printer or acoustic coupler) under this condition, a $\overline{\text{SWL}}$ signal is sent to turn transistor Q2 on. As a result, the voltage Vcc is supplied to TL 497 to make the switch voltage regulator TL 497 ready to operate. When the Vcc is supplied, a switching pulse with an on-time of about 32 μsec is generated by the external capacitor which is connected to Pin 3.

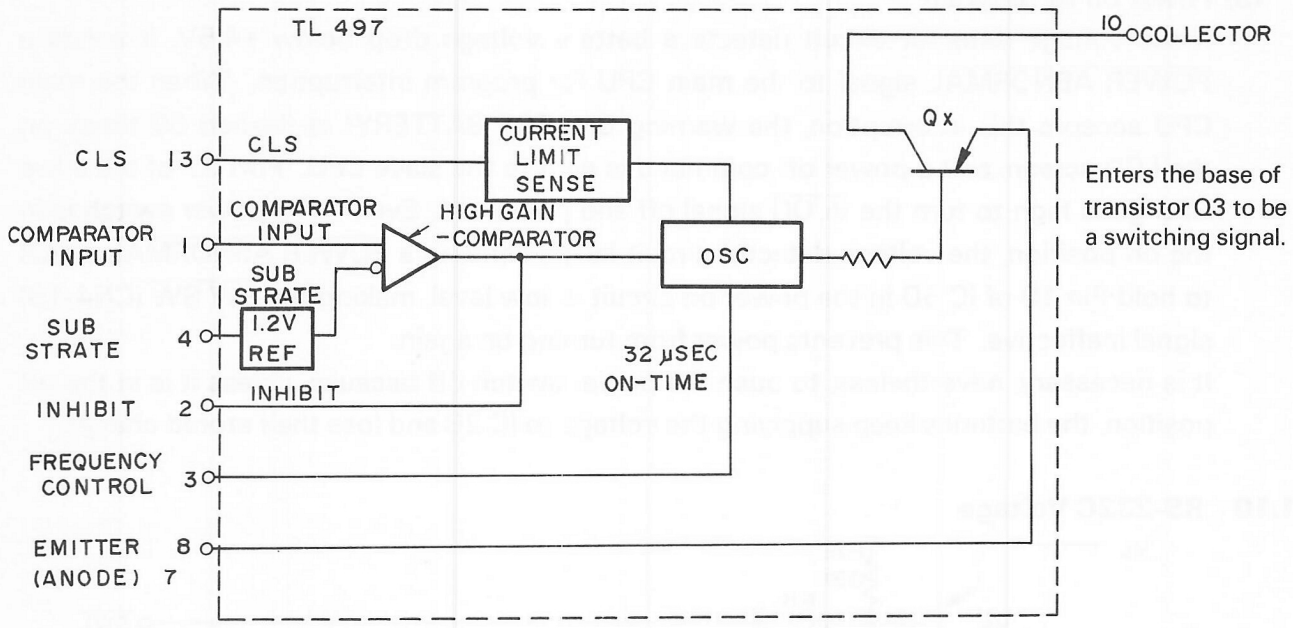

Fig. 3-13

At this point of time, the input to Pin 1 of TL 491 is 0V (because transistor Q1 is not on), the output of the high gain comparator actuates the oscillator circuit to switch the built-in transistor Qx. As a result, Pin 10 outputs a low level pulse to turn on transistor Q11, and supply a V_B pulse to transformer T1.

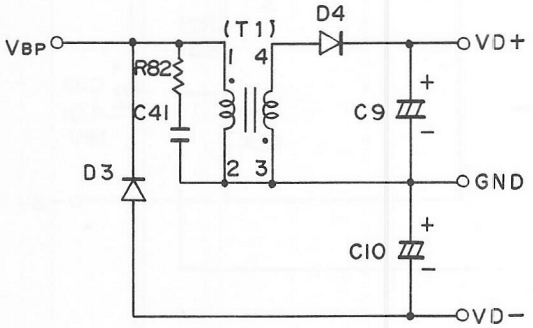

Fig. 3-14

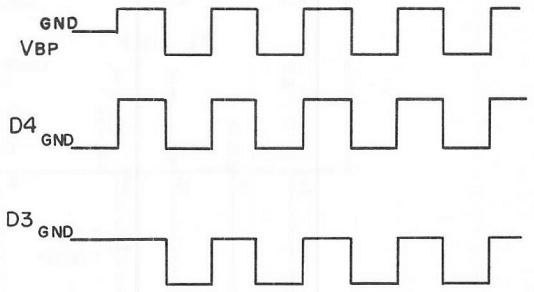

Fig. 3-15

The V_B pulse output to the coils of transformer T1 feeds a current to capacitor or C9 via diode D4 if Pin 4 of T1 is positive. If the primary side of transformer T1 goes negative, a current is fed from the capacitor via chopper diode D3.

Each output is smoothed by capacitors C9 and C10, and +8V and −8V are generated from the output terminal.

These output voltages are fed back to the regulator to stabilize them. The output voltage stabilization by feedback to the regulator is effected by utilizing the potential difference between the signal line that is connected to Pin 1 of TL 497 half way between R21 (6.8 kilohms) and R17 (1.2 kilohms) and the signal line that is connected to Pin 4 of TL 497.

If the VD output is normal (−8V), the potential difference is 1.2 V ($\frac{8}{68+.12} \times 1.2$). If the voltage is lower than normal, the potential difference will be less than 1.2V, causing the oscillator circuit of TL497 to operate to switch transistor Q11. If the voltage is higher than normal, transistor Q11 stops switching. It is in this way that the outputs are fed back to the regulator to maintain the +8V and −V at the rated level.

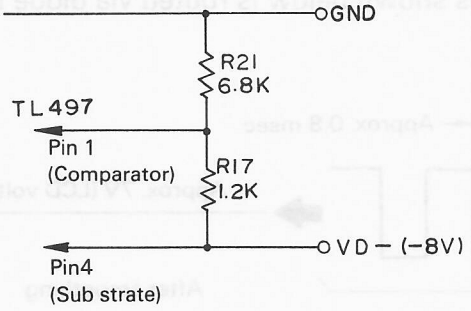

Fig. 3-16

- Overcurrent detector circuit

  This is a protecting circuit against output shortcircuit, etc. Resistor R2 in the circuit that connects V_B to transistor Q11 is an overcurrent detecting resistor. TL 497 has a built-in current limit sense circuit, which stops oscillation operation if it detects a voltage drop of 0.7V, thus stopping the ± 8V outputs.

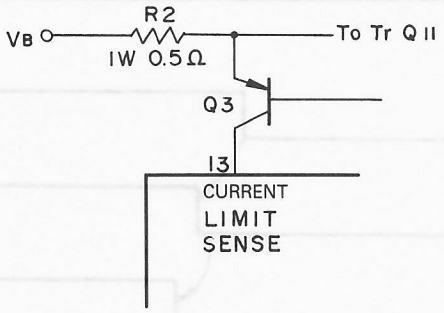

Fig. 3-17

*Overcurrent is 1.2A as calculated by the following equation.

$$\left\{ \begin{array}{l} I_{(A)} = \dfrac{0.7V}{0.5\Omega} \quad \text{..... CURRENT LIMIT SENSE Resistor R2} \\ = 1.2(A) \quad \text{..... Overcurrent} \end{array} \right\}$$

3.1.11 LCD Voltage

A voltage effect type LCD is employed so the voltage required for its control is generated form the battery voltage by DC-DC conversion.

LCD Voltage Circuit (DC-DC Converter Circuit)

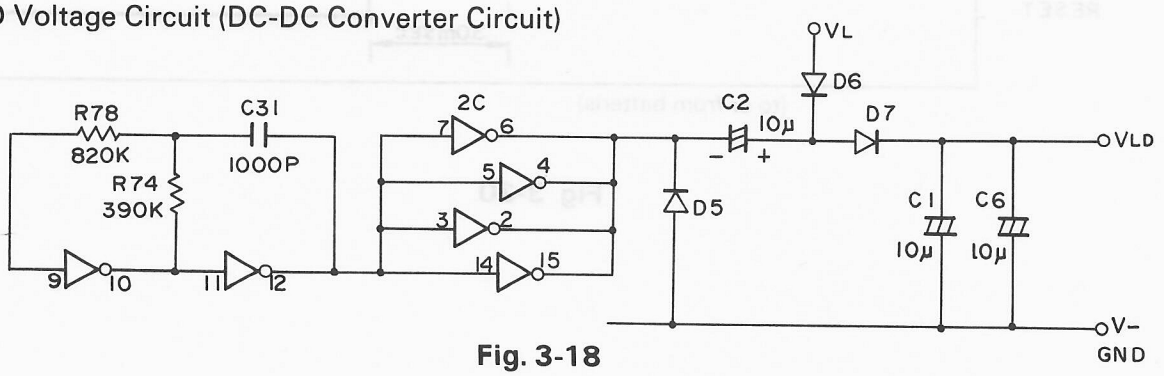

Fig. 3-18

The oscillator circuit shown in the left part of the above circuit diagram generates a pulse having a period of about 0.8 msec, which is fed to IC 2C, where its 4 drivers boost the pulse drive capacity. A capacitor C2 is installed on the output side of IC 2C. The output of IC 2C shifts the negative voltage of capacitor C2 so the positive voltage of C2 rises higher than V_L (+5V), causing the capacitor to discharge.
As a result, a voltage such as shown below is routed via diode D7 to capacitors C1 and C6 to be smoothed and output.

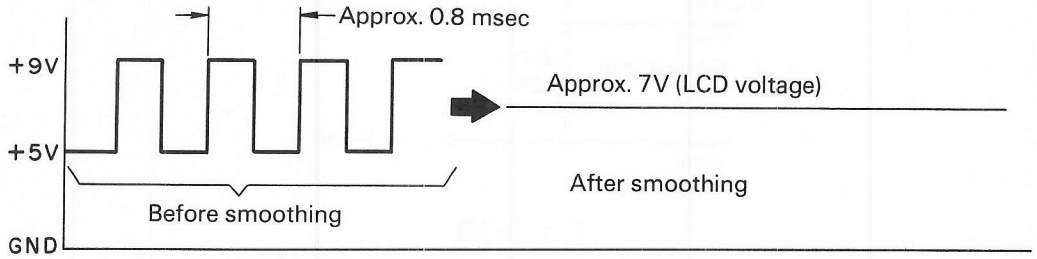

Fig. 3-19

3.1.12 Power Signals

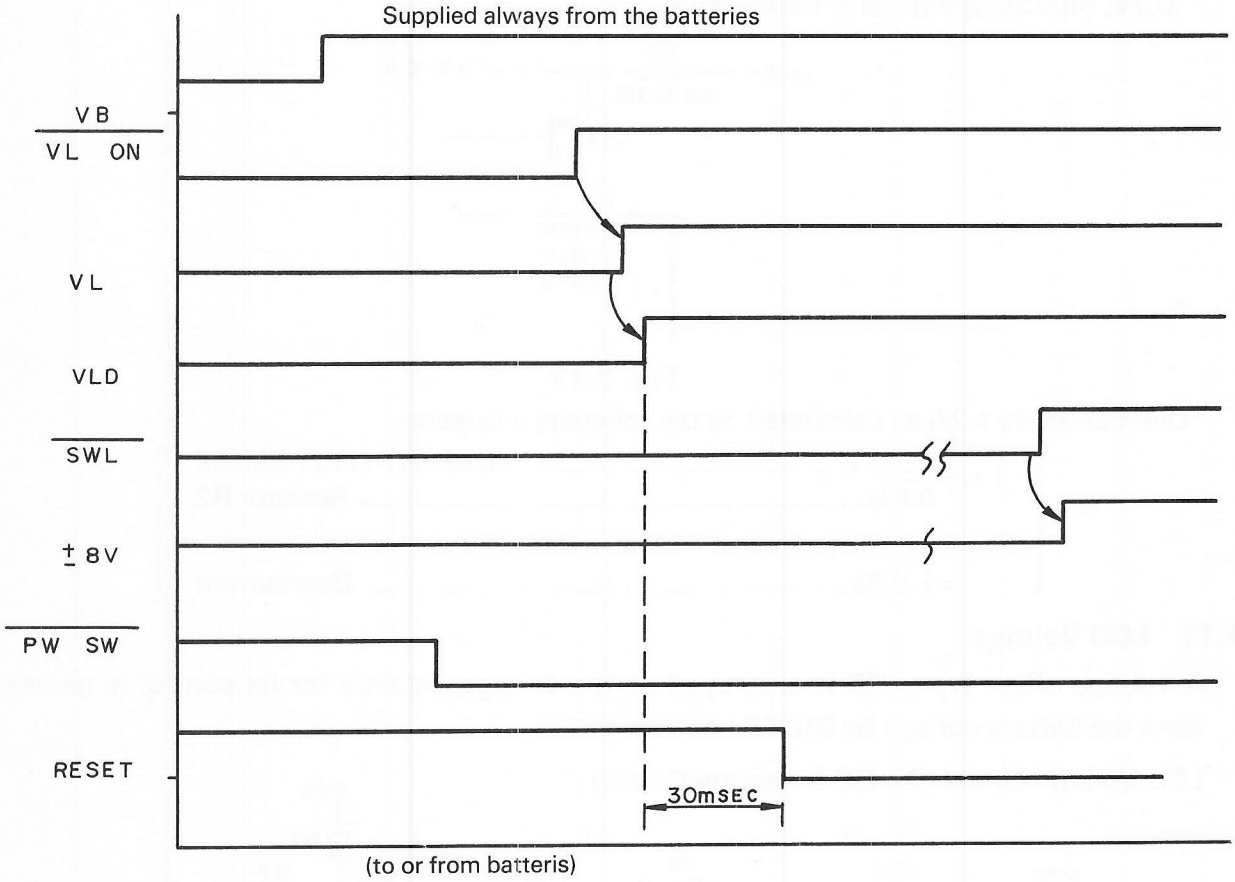

Fig. 3-20

Signal	Signal Direction	Meaning of Signal	NOTE
$\overline{\text{PW SW}}$	Incoming	Power switch signal	$\overline{\text{PW SW}}$ (CN4-19) ..... Interruption for power on or off $\overline{\text{PW SW}}$ (CN5-18) ..... Voltage detector circuit starts.
V_B	Outgoing	Backup voltage for C-MOS, RAM, etc. (for printer)	Battery voltage 4.5V to 6.0V (operating range)
$\overline{\text{VL ON}}$	Incoming	Power on signal	Output upon resetting after $\overline{\text{PW SW}}$ signal is output.
V_L	Outgoing	Line voltage on signal	Starts supplying after $\overline{\text{VL ON}}$ signal detection.
V_{LD}	Outgoing	LCD voltage	About 7V is generated for LCD from battery voltage.
$\overline{\text{SWL}}$	Incoming	± 8V power on signal	Output only when RS-232C is operating.
± 8V	Outgoing	RS-232C voltage	Output by $\overline{\text{SWL}}$ singnal.
RESET	–	Initializes circuits	

3.2 CPU Operation

3.2.1 Main CPU/Slave CPU

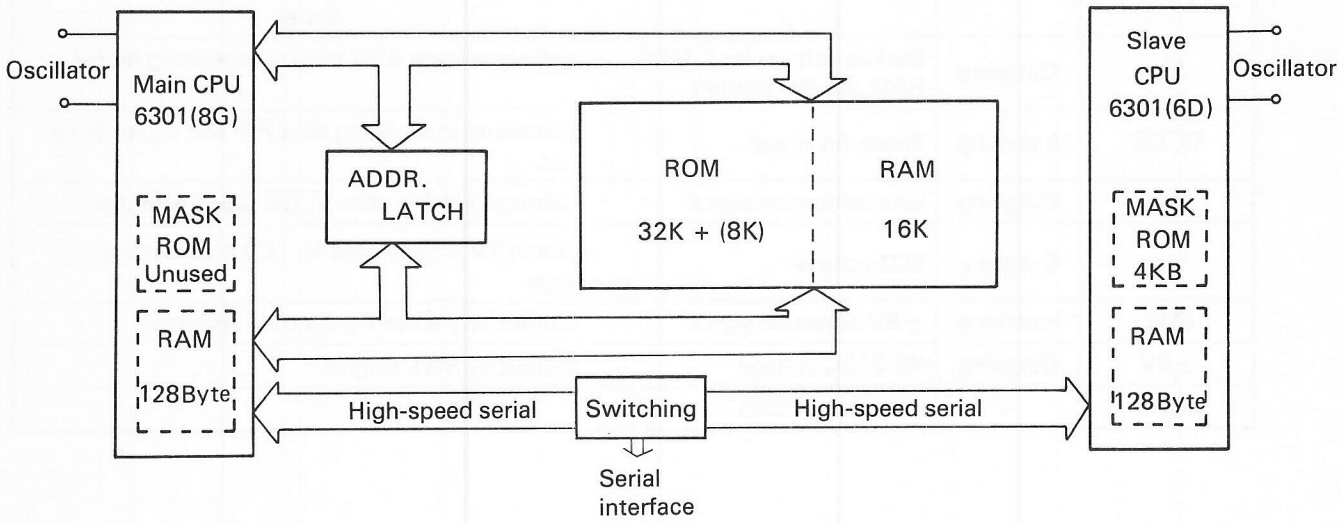

Fig. 3-21

The HX-20 is of a dual CPU system that uses two CPU 6301s to allow dispersed processing. The main CPUs are operated by the control program stored in the external RAM, and control 1) the keyboard, 2) liquid crystal display, 3) ROM and RAM addresses, 4) bar code reader, and 5) clock. The main CPUs do not use the built-in mask ROM, but only the program stored in the external ROM, for control purposes. The slave CPU has a control program in its built-in mask ROM (4 kb), and controls 1) audio cassette, 2) printer, 3) bar code reader, 4) RS-232C, 5) high-speed serial, 6) cartridge option, and 7) power off independently of the main CPUs. The slave CPU is connected to the main CPUs with 38,400 bps high-speed serial lines through which commands and data are sent and received as necessary for control.

3.2.2 CPU Timing

The CPU 6301s which play the central role in control operation are 8-bit microcomputer units (MCUs) that have a low power consumption mode and an error detection function, and execute commands at the timing shown on the next page.

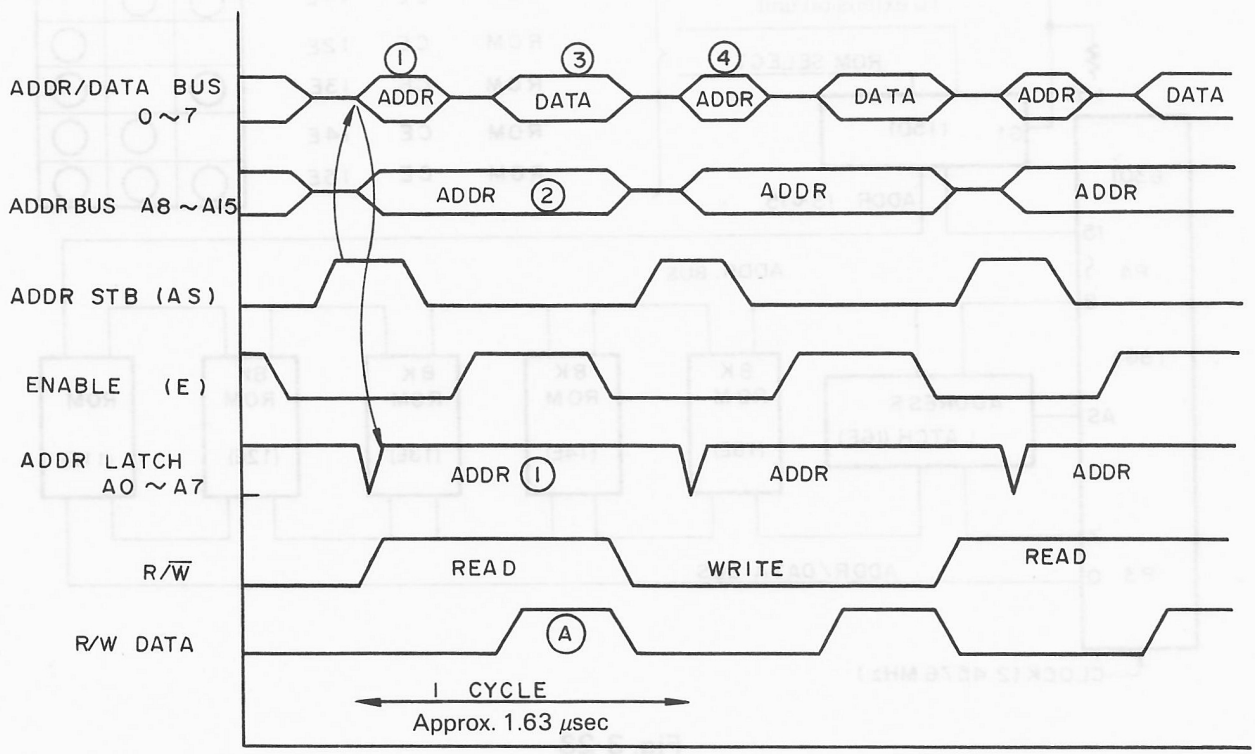

Fig. 3-22

The CPU is connected to an external oscillator from its pins 2 and 3. The clock pulse of 2.4516 MHz generated by the external oscillator is divided by 4 in the CPU to generate a system clock of about 1.63 μsec. In read operation, after an address strobe (AS) is sent out, address ① is output to the address data bus lines, and is held until address ④ reaches the address latches. When address ② is output, the desired ROM and its data address are designated. As an ENABLE (E) signal is output, 1 byte of data Ⓐ (program) is output to the data buses to be taken into the CPU 6301.

In write operation, a RAM address is designated as in read operation, and if data is output with the R/$\overline{W}$ signal at low level, data can be written into the designated I/O or RAM.

3.2.3 Address/Data Buses

The main CPU has 16 address lines (DA0 to A15) and 8 data lines (DA0 to DA7), and addresses of up to 64 kilobytes can be directly designated. The bus lines, CPU, and ROMs are connected one to another as shown below.

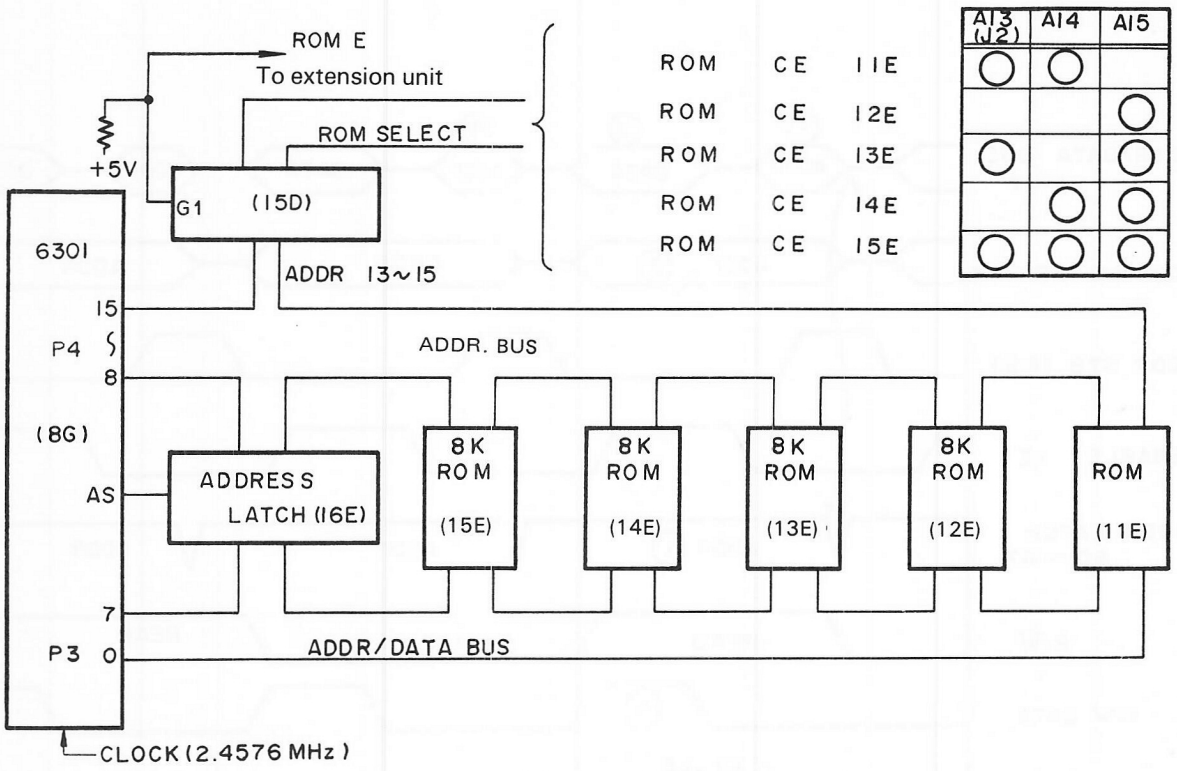

Fig. 3-23

Here, the main CPU operates in the expanded multiplex mode.
The address buses of the CPU 6301 share the lower bits 0 to 7 with the data buses. Therefore, addresses and data are separately used by means of an AS signal, and address latch 16E is used to hold the lower addresses. A decoder 15D is used for the upper addresses A13 to A15 to select ROM chips.
Other addresses A8 to A12 and lower addresses A0 to A7 are used for ROM address designation. (The 13 bits of A0 to A12 can be used for designating up to 8 kilobytes of addresses, which correspond to the chip capacity of one ROM.)

3.2.4 Initialization

Upon completion of resetting after power on, the main CPUs execute the program stored in the external ROM to initialize the system (from mode designaion to display of a menu on the screen) as illustrated on the Fig. 3-24, 25.

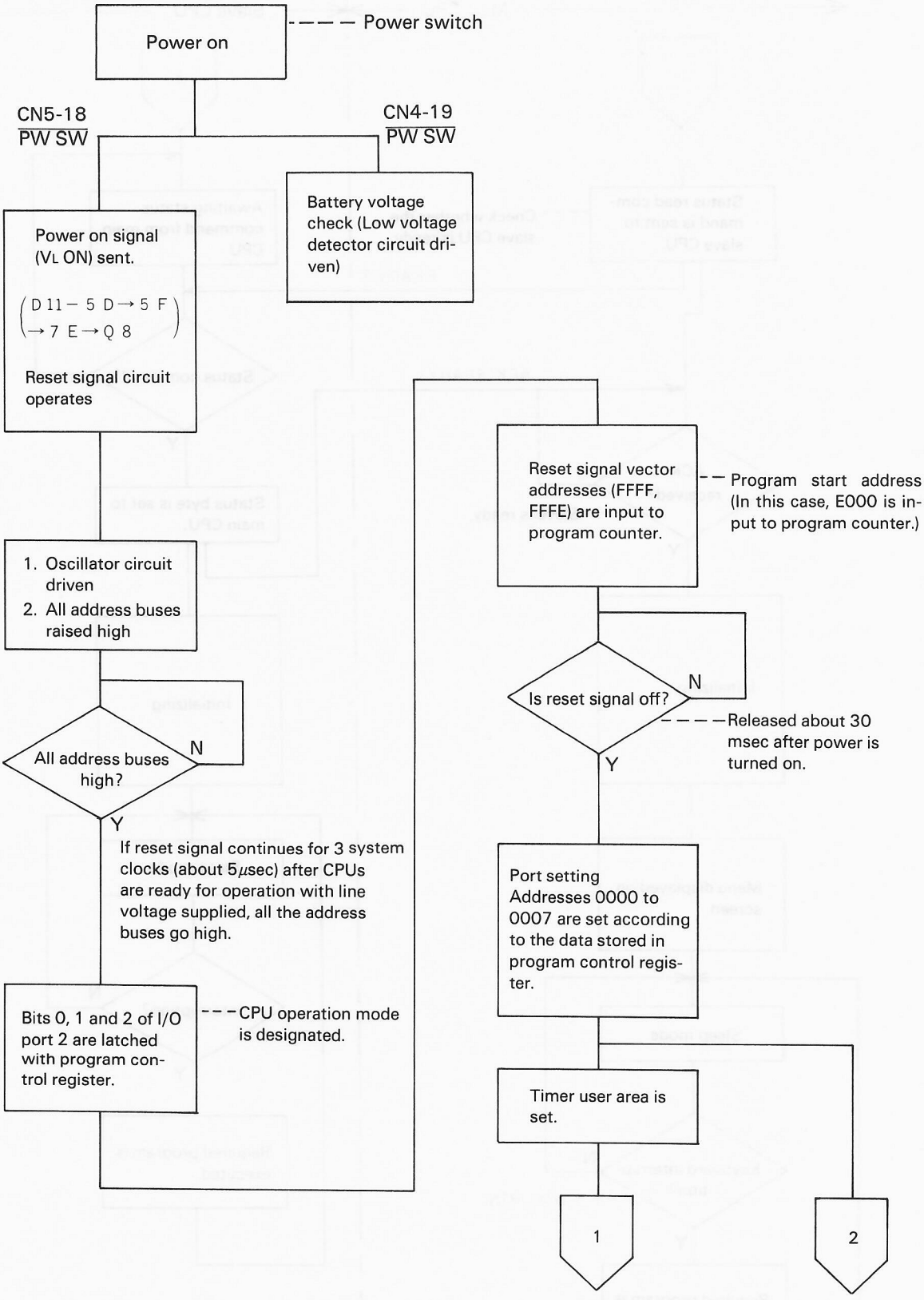
Power on
Power switch
CN5-18
PW SW
CN4-19
PW SW
Battery voltage check (Low voltage detector circuit driven)
Power on signal (VL ON) sent.
(D11 – 5 D → 5 F
→ 7 E → Q 8)
Reset signal circuit operates
1. Oscillator circuit driven
2. All address buses raised high
All address buses high?
N
Y
If reset signal continues for 3 system clocks (about 5μsec) after CPUs are ready for operation with line voltage supplied, all the address buses go high.
Bits 0, 1 and 2 of I/O port 2 are latched with program control register.
CPU operation mode is designated.
Reset signal vector addresses (FFFF, FFFE) are input to program counter.
Program start address (In this case, E000 is input to program counter.)
Is reset signal off?
N
Y
Released about 30 msec after power is turned on.
Port setting
Addresses 0000 to 0007 are set according to the data stored in program control register.
Timer user area is set.
1
2

Fig. 3-24

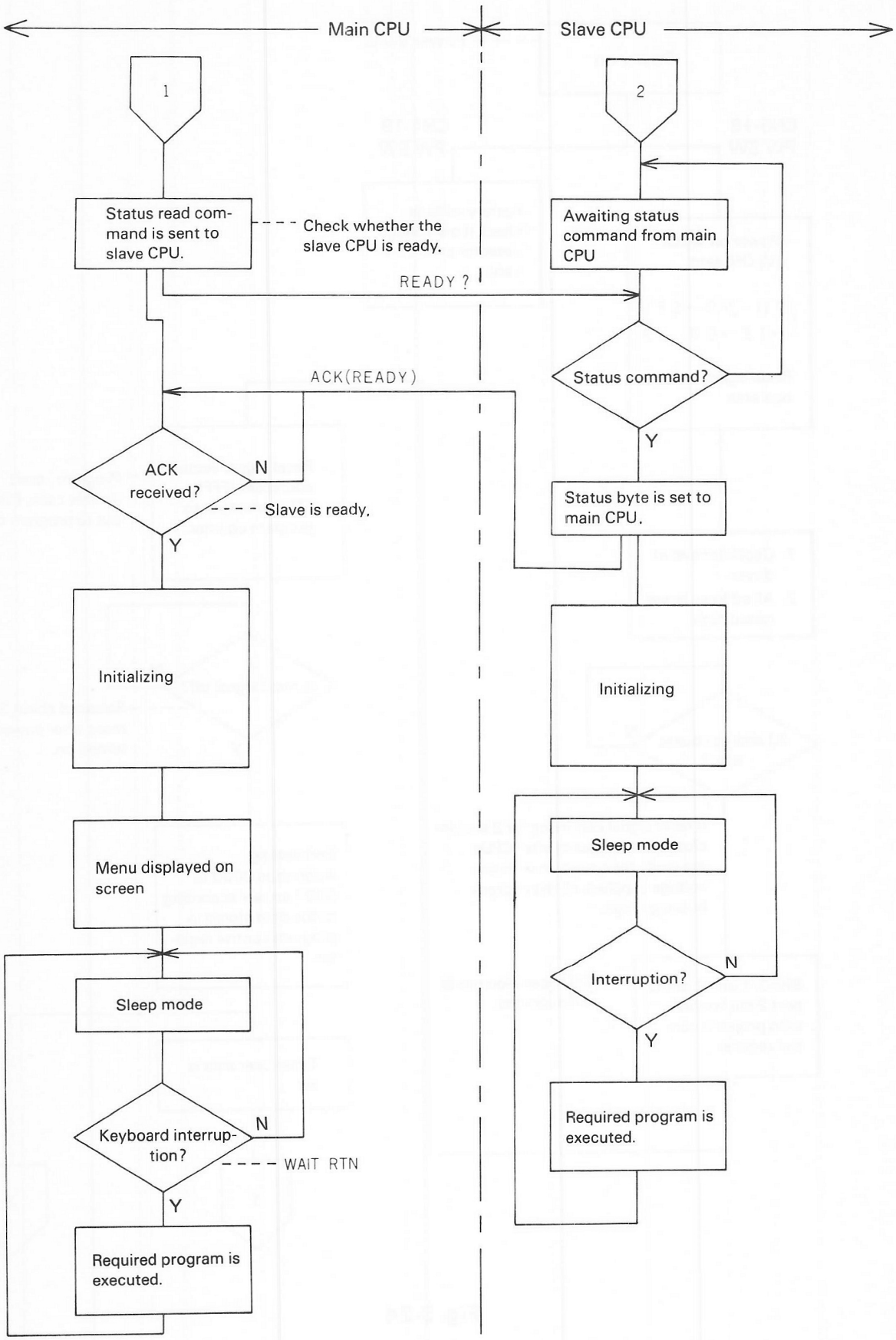
Main CPU
Slave CPU
1
2
Status read command is sent to slave CPU.
Check whether the slave CPU is ready.
Awaiting status command from main CPU
READY ?
Status command?
ACK(READY)
Y
ACK received?
N
Slave is ready.
Status byte is set to main CPU.
Y
Initializing
Initializing
Menu displayed on screen
Sleep mode
Sleep mode
Interruption?
N
Y
Keyboard interruption?
N
WAIT RTN
Y
Required program is executed.
Required program is executed.

Fig. 3-25

An outline of operation after power is turned on is as shown below. The same takes place when the reset is pressed.

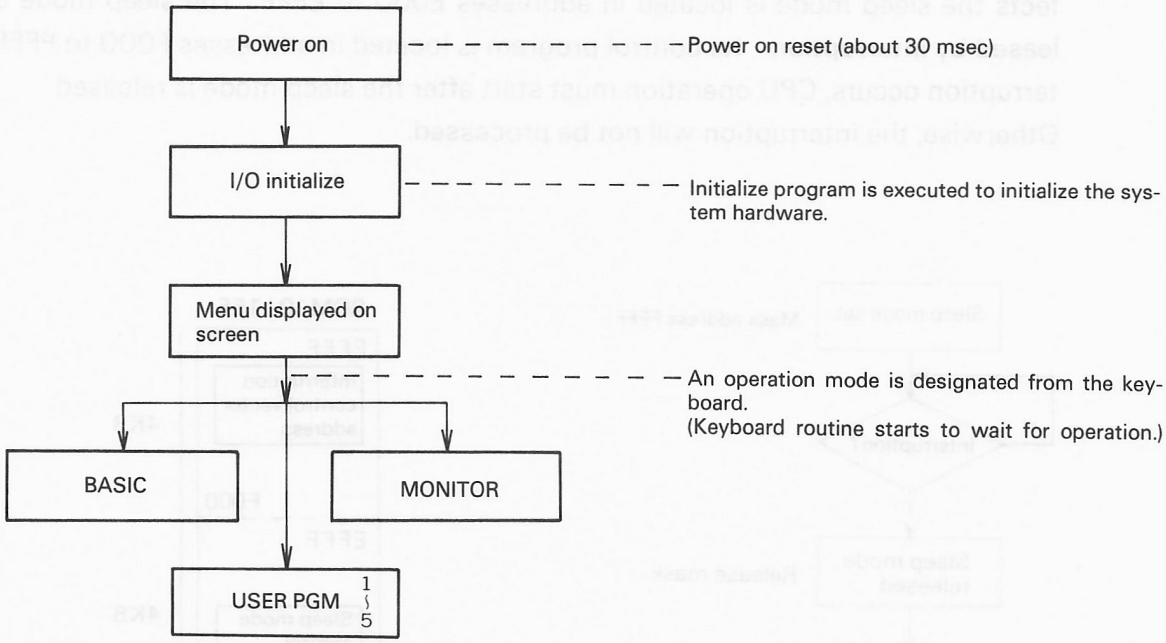

Fig. 3-26

The main and slave CPUs read operation mode selection data and program start address (a vector address corresponding to the reset signal) while the reset signal is in effect. After reset signal is released, the main and slave CPUs are initialized.

After initializing, the slave CPU immediately goes into the sleep mode. The main CPU goes into the sleep mode as the keyboard routine starts after a menu is displayed on the screen. After the menu display, both the main and slave CPUs are in the sleep mode. The sleep mode can be released only by key switch interruption. The purpose of this is to minimize power consumption while the CPUs are not being used.

3.2.5 Sleep Mode

(1) Because the HX-20 operates on battery power, it is designed to operate the CPUs not constantly but only when necessary for minimizing power consumption. CPU operation is stopped and turned into the sleep mode by executing a SLP command. Power consumption is reduced in the sleep mode to about 1/10 of the power consumed when the CPUs are operating.

- Operations in the sleep mode
  - The CPUs stop operating, but the data stored in the registers are kept intact.
  - The peripheral functions other than the CPUs do not stop.
  - ENABLE and AS signals are output.
  - All the address and data bus lines go high.
- Sleep mode release
  - Reset signal detected
  - Interruption signal detected

(2) Control incidental to the sleep mode

The sleep mode is selected by executing the keyboard routine. The program which effects the sleep mode is located in addresses E000 to EFFF. The sleep mode can be released by interruption. Its control program is located in addresses F000 to FFFF. If an interruption occurs, CPU operation must start after the sleep mode is released. Otherwise, the interruption will not be processed.

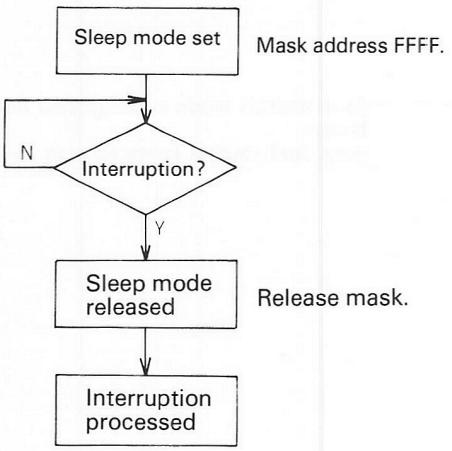

Fig. 3-27

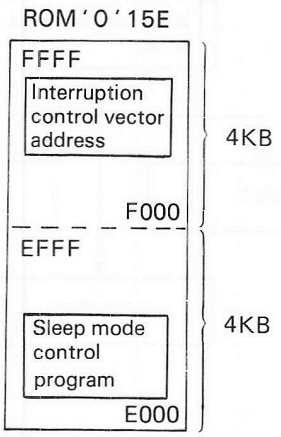

Fig. 3-28

When selecting the sleep mode, address XX2C is output so Pin 9 of IC 8E goes low to latch IC 8E. As a result, Pin 2 of IC 8E remains high after the selection of the sleep mode. All the address bus lines are at high level in the sleep mode.

If an interruption occurs under this condition, an FFFF (reset/trap error) is output as a vector address. If no control is performed then, it is processed in a way different from the normal interruption processing.

Because IC 8E is latched when the sleep mode is selected, the FFFF (A12) output lowers the output from Pin 3 of IC 8E, causing the G2A signal from IC 15D to go high.

Thus, no ROM select is output and vector address FFFF is ignored.

Then, the CPUs execute the sleep mode control program in addresses E000 to EFFF to release the sleep mode. In this case, address line A12 will not turn on so ROM selection is possible and the program can be executed. IC 8E is released from its latched state when address XX26 is output.

Now interruptions can be processed. If an interruption occurs, it is processed by using a vector address.

(3) RAM/ROM select circuit

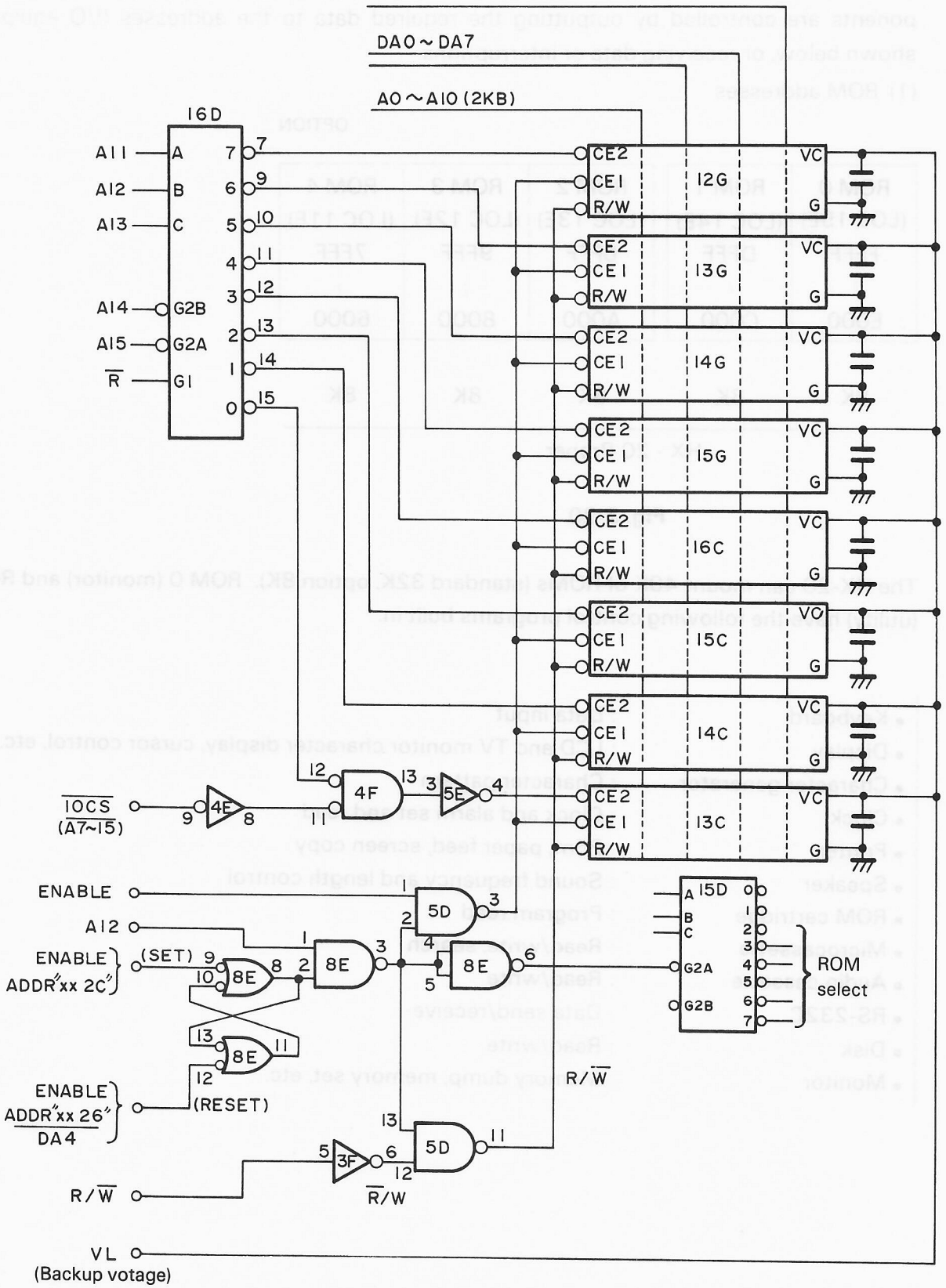

Fig. 3-29

3.2.6 Memory Map

After power is turned on, or when executing a program, the control programs control all input and output operations by means of addresses and interruptions. That is, the system components are controlled by outputting the required data to the addresses (I/O equipment) shown below, or receiving data or interruptions.

(1) ROM addresses

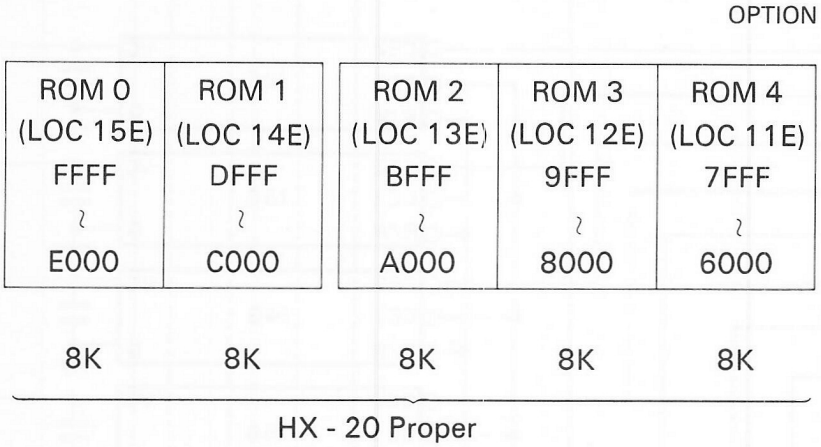

Fig. 3-30

The HX-20 can mount 40K of ROMs (standard 32K, option 8K). ROM 0 (monitor) and ROM 1 (utility) have the following control programs built in.

• Keyboard	: Data input
• Display	: LCD and TV monitor character display, cursor control, etc.
• Character generator	: Character pattern
• Clock	: Clock and alarm set and read
• Printer	: Print, paper feed, screen copy
• Speaker	: Sound frequency and length control
• ROM cartridge	: Program read
• Microcassette	: Read/write, search
• Audio cassette	: Read/write
• RS-232C	: Data send/receive
• Disk	: Read/write
• Monitor	: Memory dump, memory set, etc.

(2) Main CPU address map

Addresses 0000 to 00FF are in the main CPUs and address 0100 and subsequent addresses are in the external RAM (13C to 16C, 12G to 15G, and extension unit).

Address	Meaning
0000 ~ 0007	Port control and register PORT 1 — PORT ADDR 0002 — DIRECTION REG. 0000 (RS-232, etc.) PORT 2 — PORT ADDR 0003 — DIRECTION REG. 0001 (Serial, RS-232, bar code) PORT 3 — PORT ADDR 0006 — DIRECTION REG. 0004 (A0 ~ A7, D0 ~ D7) PORT 4 — PORT ADDR 0007 — DIRECTION REG. 0005 (A8 ~ A15)
0008 ~ 000F	Timer control and data registers 0008 : Timer control 0009 ~ 000A : Free running counter ..... CPU R/W 000B ~ 000C : Output compare register ..... R/W 000D ~ 000E : Input capture register ..... READ 000F : P3 control register
0010 ~ 0013	Serial control and registers 0010 : Serial speed rate 0011 : Serial control status 0012 : Receive data register 0013 : Transmission data register
0014	RAM control : External RAM/internal RAM switching
0015 ~ 001F	Unused
0020	Keyboard scan KSC 0 to 7 outputs/SW6 read
0022	Keyboard inputs KRTN 0 to 7
0026	Cartridge interface/interruption mask release/LCD chip select/key mask
0028	Keyboard inputs KRTN 8 to 9, $\overline{\text{PW SW}}$, $\overline{\text{BUSY}}$ (SO)
002A	Serial clock generated by ANDing $\overline{\text{R}}$/W signal
0040 ~ 004D	Clock register 0040 : Sec — 0041 : Sec (alarm) 0042 : Min — 0043 : Min (alarm) 0044 : Hr — 0045 : Hr (alarm) 0046 : Day of week — 0047 : Date 0048 : Month — 0049 : Year 004A ~ 004D : Control register
004E ~ 007F	RAM RAM area for system 50 bytes

Address	Meaning
0080 ~ 00FF	RAM built in CPU (128 bytes)
0100 ~ FFFF	External RAM

(3) Slave CPU memory map

The slave CPU controls the printer and other I/O equipment with its built-in mask ROM (4 kb).

Address	Meaning
0000 ~ 0007	Port control and register PORT PORT ADDR DIRECTION REG. 1 0002 0000 Printer, speaker 2 0003 0001 CPU COMM, etc. 3 0006 0004 RS-232C, cassette, etc. 4 0007 0005 RS-232C, cartridge
0008 ~ 000F	Timer control and data registers 0008 : 0009 ~ 000A : 000B ~ 000C : 000D ~ 000E : 000F :
0010 ~ 0013	Serial registers 0010 0011 0012 0013
0014	RAM control : External/internal RAM switching
0015 ~ 007F	Unused
0080 ~ 00FF	Internal RAM (128 bytes)
0100 ~ DFFF	Unused (Addresses are not physically present.)
F000 ~ FFFF	Internal ROM (4 kb)

3.2.7 Interruption Control

An interruption signal is used by an I/O equipment in requesting the CPUs for some processing.

As shown in the interruption table, there is the preset priority order according to the kinds of interruption. Each vector address has an address to start the program (interruption processing program) that is required for processing an interruption request. If an interruption request occurs, the level of the program being executed and the kind of the interruption are checked; and if the interruption request has a high level, the data of the program counter and registers are saved in the stack area, and the interruption request is processed.

Interruption acceptance and processing procedures are as shown in the flow chart below.

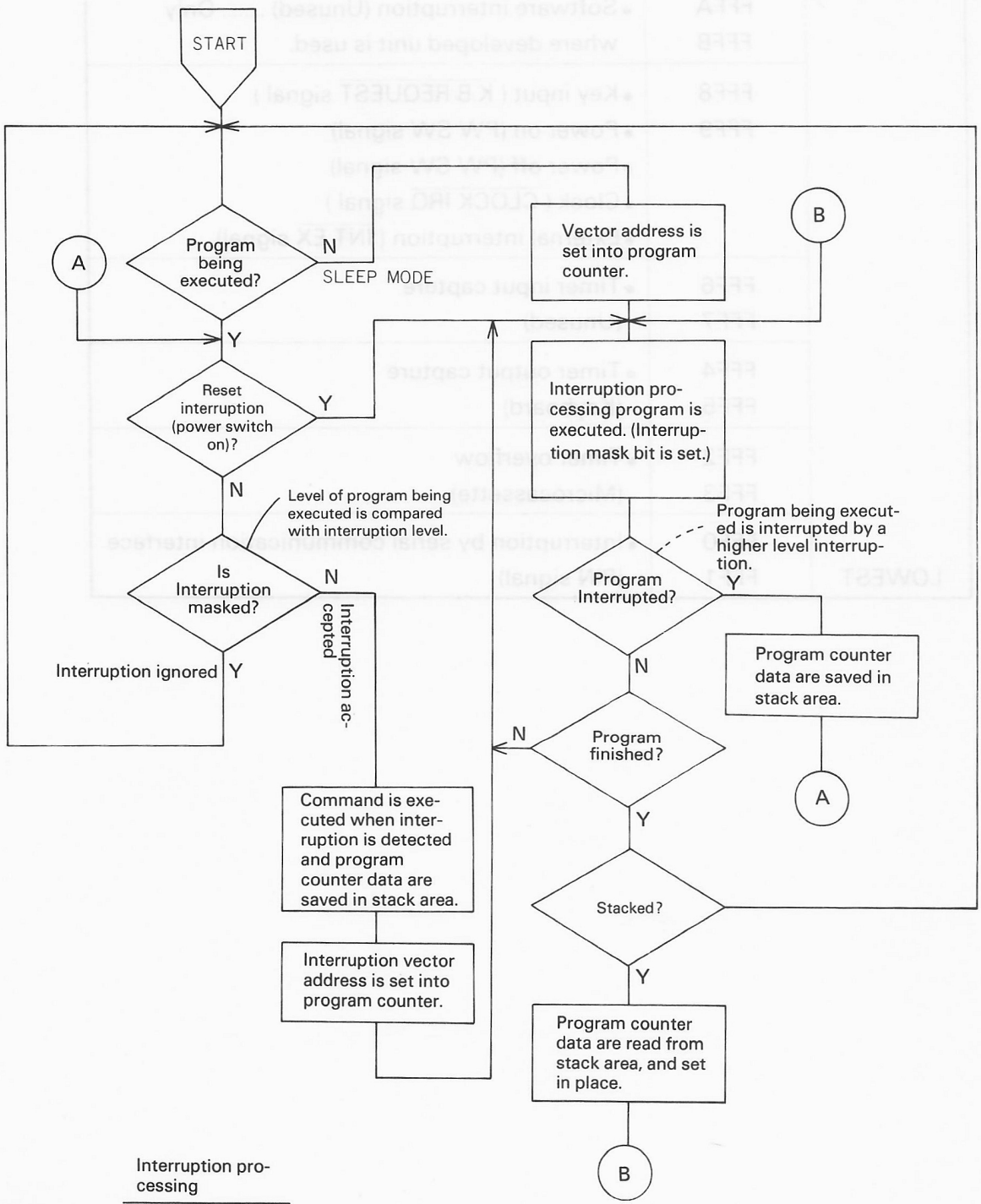

Interruption mask bit : Condition code register

Fig. 3-31

3.2.8 Main CPU Interruption Table

Interruption priority	VECTOR	Reason for Interruption
HIGHEST	FFFE FFFF	• Immediately after power up After reset
	FFFE FFFF	• Address error or operation code error (TRA-P) ..... used for monitor
	FFFC FFFD	• Master clear by $\overline{\text{NMI}}$ signal interruption (Unused)
	FFFA FFFB	• Software interruption (Unused) ..... Only where developed unit is used.
	FFF8 FFF9	• Key input ($\overline{\text{K.B REQUEST}}$ signal) • Power on (PW SW signal) • Power off (PW SW signal) • Clock ($\overline{\text{CLOCK IRQ}}$ signal) • External interruption ($\overline{\text{INT EX}}$ signal)
	FFF6 FFF7	• Timer input capture (Unused)
	FFF4 FFF5	• Timer output capture (Keyboard)
	FFF2 FFF3	• Timer overflow (Microcassette)
LOWEST	FFF0 FFF1	• Interruption by serial communication interface (PIN signal)

3.2.9 Slave CPU Interruption Table

Interruption priority	VECTOR	Reason for Interruption
HIGHEST	FFFE FFFF	• Immediately after power on • After reset
	FFFE FFFF	• Address error or operation code error (TRAP)
	FFFC FFFD	• Master clear by NMI signal interruption
	FFFA FFFB	• Software interruption
	FFF8 FFF9	Unused
	FFF6 FFF7	• Timer input capture
	FFF4 FFF5	• Timer output capture
	FFF2 FFF3	• Timer overflow (Microcassette)
LOWEST	FFF0 FFF1	• Interruption by serial communication interface

3.3 Address Control Circuit

3.3.1 Memory Addressing

Addresses in the internal RAMs can be designated by CE2 (chip enable) signal from IC 16D, address lines (2 kb from A0 to A10) to each RAM chip, and CE1 signal; and addresses in the external RAM (in the extension unit) by address lines A0 to A15 (up to 64 kilobytes can be designated). The HX-20 uses an aditional RAM or buffer (main CPU/clock IC 146818/LCDμPd7227) which uses the same addresses. Thus, control signals are necessary to signal out the RAM to be used.

3.3.2 Address Control Signals

(1) The basic control signal is the $\overline{\text{IOCS}}$ signal that is output at Pin 8 of IC 2E. The $\overline{\text{IOCS}}$ signal is output where address lines are $\overline{\text{A7 – A15}}$ so if this signal is output, it indicates addresses 0000 to 007F.

(2) Auxiliary control signals include IC 9E and incidental I/O address control signals.

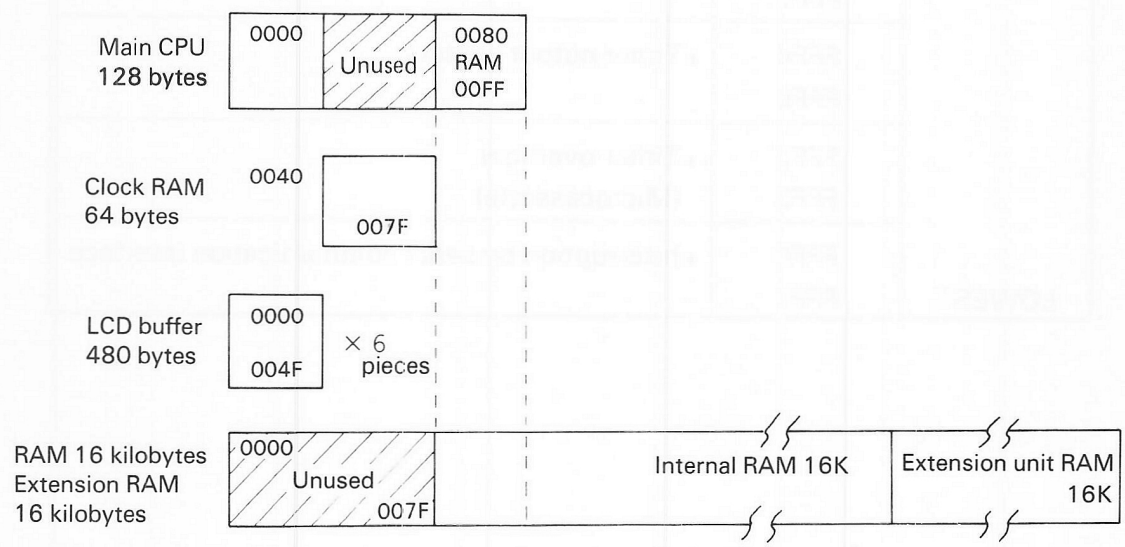

Fig. 3-32

- Main CPU

  Bit 6 of the RAM control register (address 0014) in the main CPU controls the RAM in the CPU or an external RAM.

  If bit 6 is on, the buit-in RAM in the CPU is used so no R/W operation is performed for the external memories.

- Built-in RAM/extension RAM

  If the $\overline{\text{IOCS}}$ signal ($\overline{\text{A7 – A15}}$) is output, it is applied to Pin 9 of IC 4E, and an inverted signal is output at Pin 8. RAM chip select IC 16D has its pin 15 at low level due to $\overline{\text{A11 – A15}}$, but Pin 11 of IC 4F is at high level ($\overline{\text{IOCS}}$ on) so that Pin 13 goes low and Pin 4 of IC 5E goes high. As a result, CE2 form RAM 13C is not turned and the built-in RAM cannot be designated.

  The $\overline{\text{IOCS}}$ signal is also supplied from connector CN7 to the extension unit so the RAM in the extension unit cannot be designated either.

  For the reasons described above, addresses 0000 to 007F represent the CPU RAM or LCD buffer or clock RAM.

- LCD buffer

  The LCD has a total of 6 buffers (480 bytes in total) that can be designated by addresses 0000 to 004F (80 bytes). These addresses are designated by setting the data pointer (made of 7 bits) in the LCD by the LID command (Load Immediate to Data Pointer), and each of the 6 buffers (80 bytes each) is designated by CS (chip select). Thus, the main CPU does not directly designate addresses. It uses only LCD addresses 0026 and 002A for addressing.

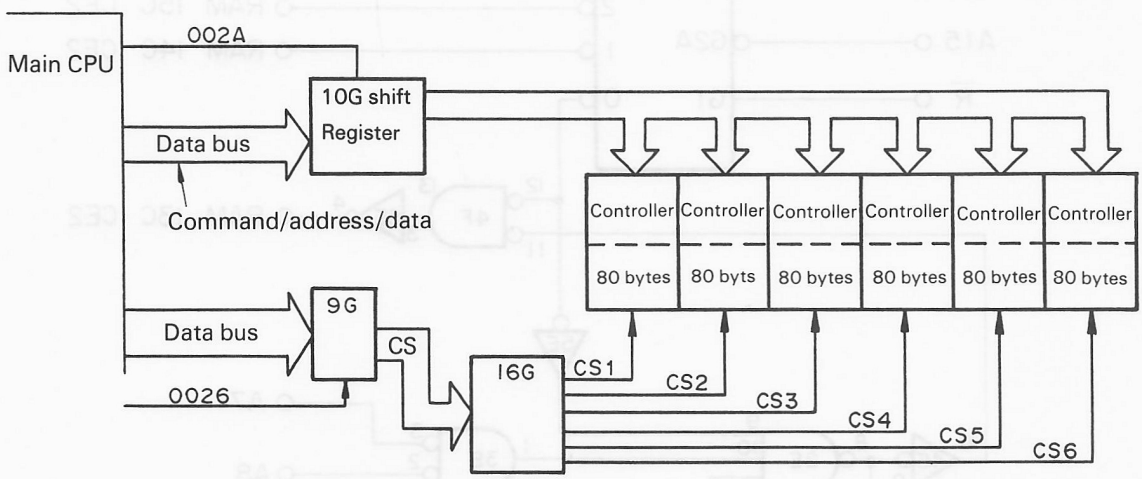

Fig. 3-33

- Clock RAM

  Access to the clock RAM is controlled by Pin 13 (E) of IC 6G. Its signal is supplied to clock IC 6G via Pin 8 of IC 1E, IC 4F and IC 5E only when $\overline{\text{IOCS}}$ ($\overline{\text{A7 – A15}}$) and A6 (address 0040 or higher) are on. While this address space is being selected, Pin 13 of IC 6G remains at low level, which permits read/write.

Address \ Bit	7	6	5	4	3	2	1	0
XX40	0	1	0	0	0	0	0	0
XX7F	0	1	1	1	1	1	1	1

Fig. 3-42

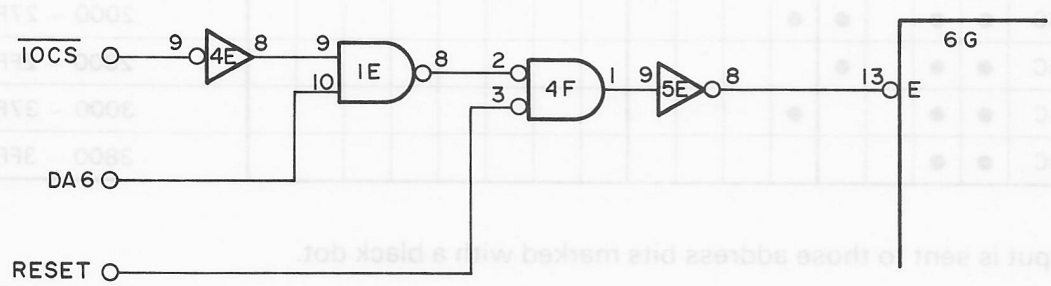

Fig. 3-34

3.3.3 RAM Address Circuit

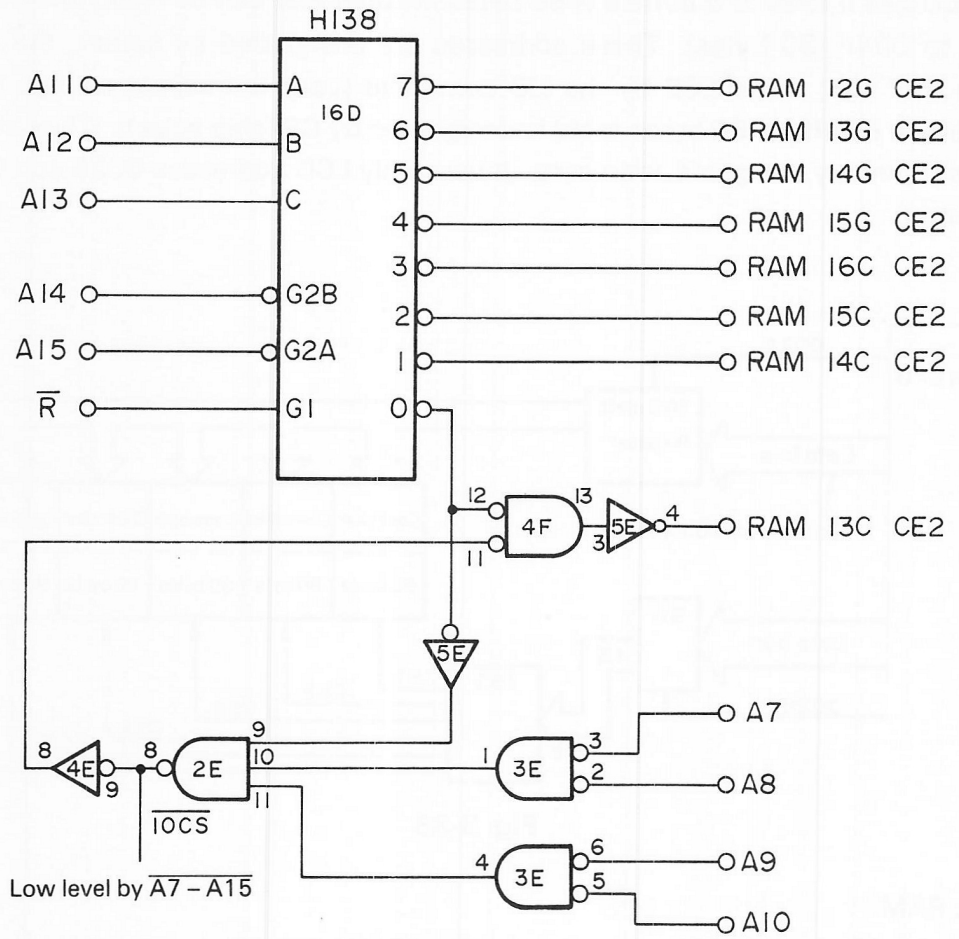

Fig. 3-35

Loc.	ADDRESS																RAM ADDR. RANGE
	15	14	13	12	11	10	9	8	7	6	5	4	3	2	1	0	
12G	●	●	●	●	●												0000 (0080) ~ 07FF
13G	●	●	●	●													0800 ~ 0FFF
14G	●	●	●		●												1000 ~ 17FF
15G	●	●	●														1800 ~ 1FFF
16C	●	●		●	●												2000 ~ 27FF
15C	●	●		●													2800 ~ 2FFF
14C	●	●			●												3000 ~ 37FF
13C	●	●															3800 ~ 3FFF

* No output is sent to those address bits marked with a black dot.

Fig. 3-36

3.3.4 I/O Select

I/O select plays the role of outputting a gate signal from IC 9E shown below to each I/O interface where the I/O addresses (I/O equipment) listed in the memory map are used.

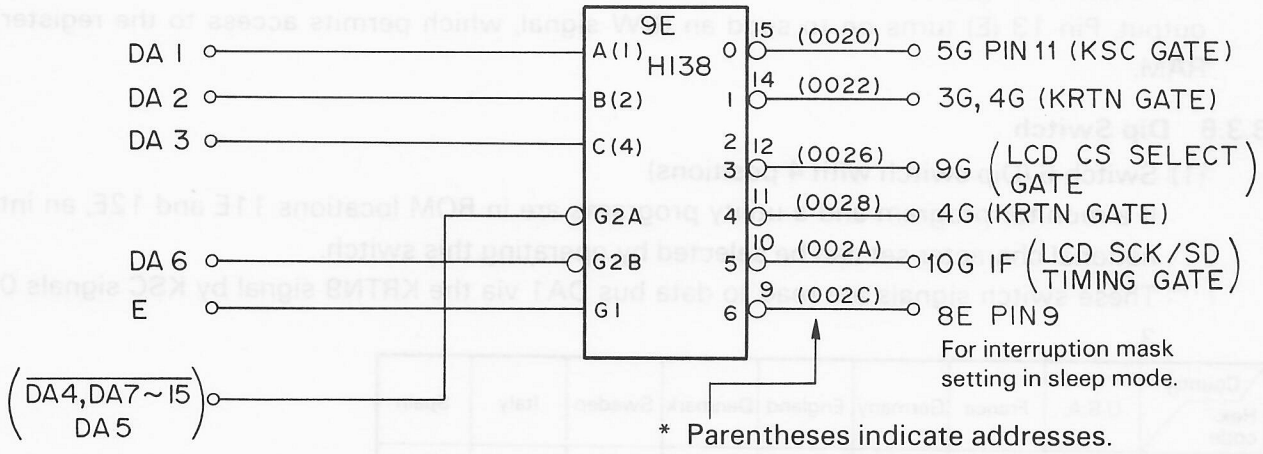

Fig. 3-37

0020 : Outputs an KSC signal output, and scans keyboard data and SW6 status.

0022 : Inputs KRTN signals 0 to 7, and reads the keyboard data scanned by the KSC signal to data buses.

0026 : LCD chip select/ROM cartridge control/interruption mask reset in sleep mode/masking interruption from keyboard by lowering Pin 12 output from IC 9G.

0028 : Reads KRTN signals 8 and 9, $\overline{\text{PW SW}}$, and BUSY (SO) signals to data buses.

002A : Outputs an $\overline{\text{SCK}}$ signal and SD (serial data) to LCD.

002C : Mask interruption by using IC 8E in sleep mode.

3.3.5 Clock Circuit

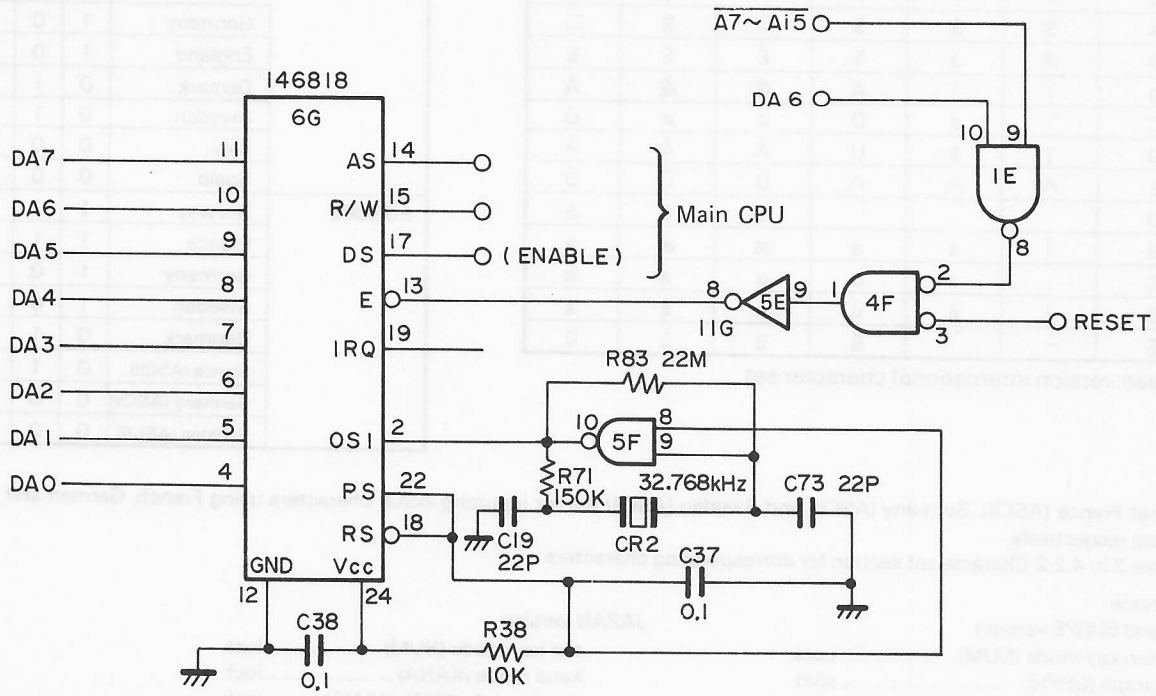

Fig. 3-38

The timer oscillator CR2 generates a basic clock of 32.768 kHz, which is amplified by IC 5F into a clock with a period of about 30 μsec. This clock is supplied to IC 6G to drive the clock IC. IC 146818 uses this basic clock to drive the clock to indicate year, month, day, hours, minutes, and seconds.

IC 146818 has a buit-in register (14 bytes) and RAM (50 bytes) with addresses 0040 to 004D (for the register) and 004E to 007F (for the RAM). Thus, if addresses 0040 to 007F are output, Pin 13 (E) turns on to send an R/W signal, which permits access to the register or RAM.

3.3.6 Dip Switch

(1) Switch 6 (Dip switch with 4 positions)

If a monitor program and a utility programs are in ROM locations 11E and 12E, an international character set can be selected by operating this switch.

These switch signals are read to data bus DA1 via the KRTN9 signal by KSC signals 0 to 3.

Country / Hex. code	U.S.A.	France	Germany	England	Denmark	Sweden	Italy	Spain
23	#	#	#	£	#	#	#	Pt
24	$	$	$	$	$	¤	$	$
40	@	à	§	@	@	É	@	@
5B	[	°	Ä	[	Æ	Ä	°	í
5C	\	ç	Ö	\	ø	Ö	\	Ñ
5D	]	§	Ü	]	Å	Å	é	¿
5E	^	^	^	^	^	Ü	^	^
60	`	`	`	`	`	é	ù	`
7B	{	é	ä	{	æ	ä	à	¨
7C	:	ù	ö	³	ø	ö	ò	ñ
7D	}	è	ü	}	å	å	è	}
7E	~	¨	ß	~	~	ü	ì	~

ASCII version international character set

Country / Hex. code	ASCII	France	Germany	Norway	Denmark	Sweden
23	#	#	#	#	#	#
24	$	$	$	¤	$	¤
40	@	à	§	É	É	É
5B	[	°	Ä	Æ	Æ	Ä
5C	\	ç	Ö	ø	ø	Ö
5D	]	§	Ü	Å	Å	Å
5E	^	^	^	Ü	Ü	Ü
60	´	´	´	é	é	é
7B	{	é	ä	æ	æ	ä
7C	:	ù	ö	ø	ø	ö
7D	}	è	ü	å	å	å
7E	~	¨	ß	ü	ü	ü

European version international character set

ROM version	Country	SW3	SW2	SW1
JAPAN	Japan	ON	ON	ON
	America	1	1	1
	France	1	1	0
	Germany	1	0	1
	England	1	0	1
	Demark	0	1	1
	Sweden	0	1	0
	Italy	0	0	1
	Spain	0	0	0
EUROPE	Norway	1	1	1
	France	1	1	0
	Germany	1	0	1
	Sweden	1	0	0
	Denmark	0	1	1
	France (ASCII)	0	1	0
	Germany (ASCII)	0	0	1
	Sweden (ASCII)	0	0	0

Note that France (ASCII), Germany (ASCII) and Sweden (ASCII) are for inputting ASCII characters using French, German and Swedish keyboard respectively.
See table 2 in 4.2.2 Characte set section for corresponding characters.

Input mode

ASCII and EURPE version

ten key mode (NUM)..... Lock
graph (GRPH) ..... shift
caps lock.....lock

JAPAN version

ten key mode (NUM)..... lock
kana mode (KANA) .....lock
graph mode (CNTL/KANA).....lock
caps lock ..... lock

Normally set *SW4 OFF, and set it ON when the flopy drive TF-20 is interfaced.

3.4 Micro Printer (Model-160)

The EPSON Model-160 prints 24 characters (or 144 dots in graphic printing) per line, and operates at a printing speed of about 0.7 line per second.

3.4.1 Outline of Mechanisms

Fig. 3-39 illustrates exterior view of the EPSON Micro Printer Model-160.

The Model-160 is a mechanical type dot printer whose printing head having four print solenoids arranged in a line in the column moves in the column for a space equivalent to 36 dot-spaces. The printing head moving in the column direction performs one way printing as the four print solenoids are energized one after another.

At the time when the head set returns to the home position, paper is automatically fed by one pitch. The repetition of this operation makes it possible to obtain the prescribed print format.

These operations are performed mainly by a power transmission mechanism, a detecting mechanism, a printing mechanism, a paper feeding mechanism and a ribbon feeding mechanism.

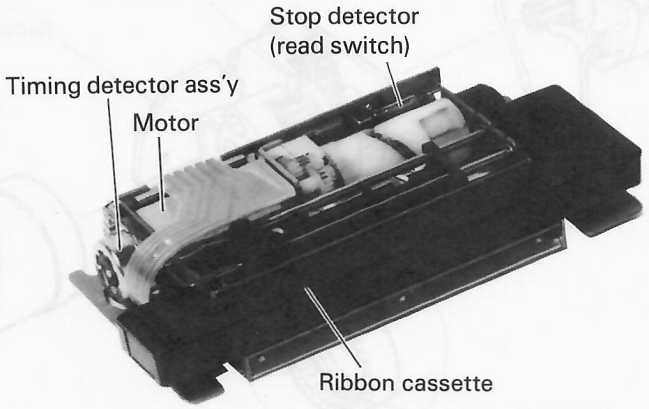

Fig. 3-39

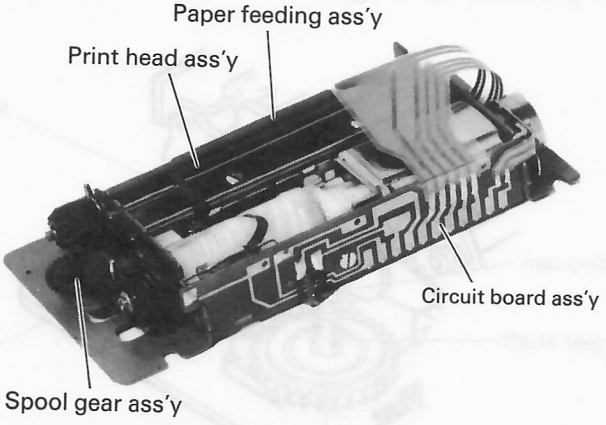

Fig. 3-40

3.4.2 Transmission Mechanism

The transmission mechanism is composed of a reduction gear train, a paper feeding gear train (a part of the paper feeding mechanism), and a ribbon feeding gear train (a part of the ribbon feeding mechanism).

(1) Reduction Gear Train

The reduction gear train consists a motor gear secured on a motor shaft, a reduction gear (large and small position) and an intermediate gear (large and small position) placed in a reduction unit, and an internal gear formed integral with a lead cam. The reduction gear (large) is in mesh with the motor gear. The reduction gear (small) is in mesh with the intermediate gear (large). The intermediate gear (small) is in mesh with the lead cam internal gear. The rotational speed of the motor is reduced to 1/18 at the lead cam by the reduction gear.

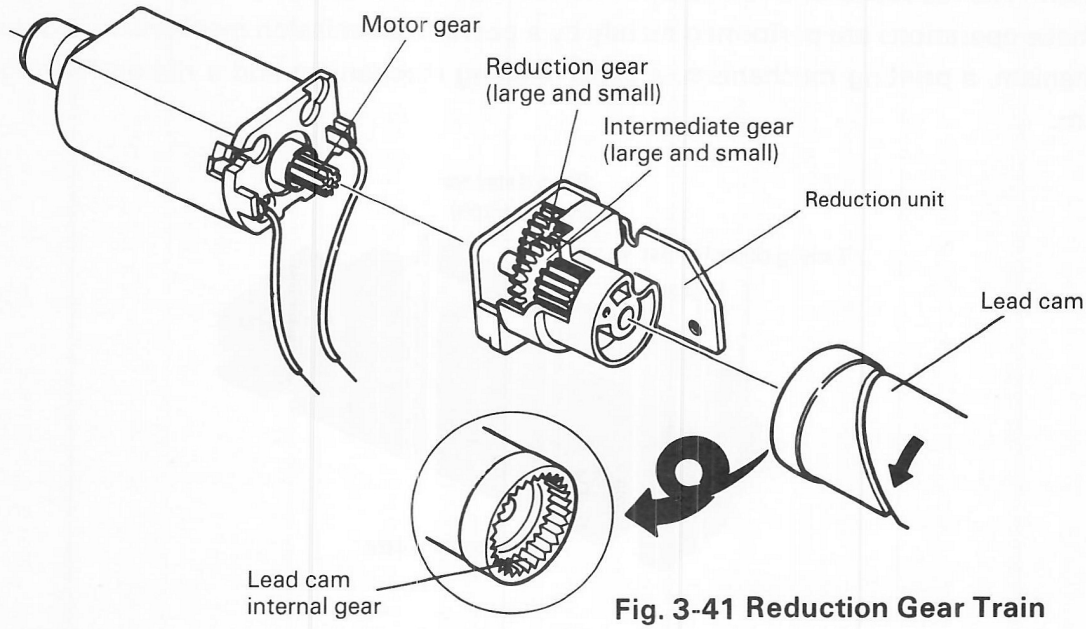

Fig. 3-41 Reduction Gear Train

(2) Ribbon Feeding Gear Train

The ribbon feeding gear train consists of a specially shaped ribbon feeding cam placed on a shaft, a ribbon feeding gear placed on a shaft on frame L side and consisting of a bevel gear portion and a small gear portion, and a spool gear placed on a shaft. These gears rotate in the directions shown by the respective arrows in Fig. 3-42. The reduction ratios are: ribbon feeding cam: ribbon feeding gear (bevel gear portion) = 9 : 1, and ribbon feeding gear (small gear portion): spool gear = 33 : 13. The ribbon is fed at a rate of 13.6 mm/sec.

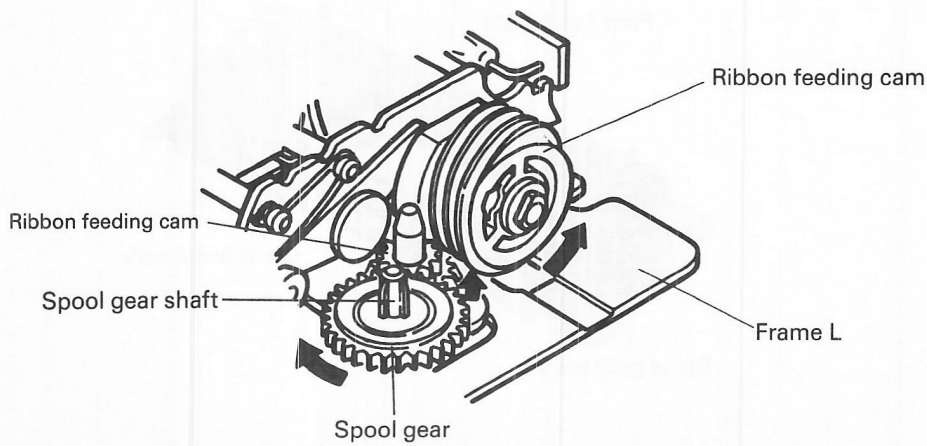

Fig. 3-42 Ribbon Feeding Gear Train

(3) Paper Feeding Gear Train

The Paper feeding gear train consists of a paper feeding transmission gear and a paper feeding gear both secured on a paper feeding roller shaft. The paper feeding gear is in engagement with a paper feeding lever, movements of the latter in directions A and B Fig. 3-43 causing the former to rotate in two directions. The paper feeding transmission gear enters into mesh with the paper feeding gear each time the latter rotates in direction C, and is made to rotate by one tooth in direction D.

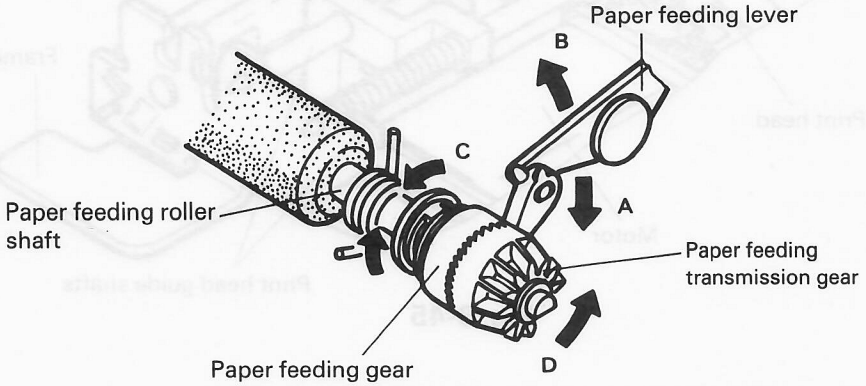

Fig. 3-43

3.4.3 Detecting Mechanism

The detecting mechanism of this printer consists of a timing detector and a resetting detector.

(1) Timing Detector

The timing detector is a tachogenerator coupled directly to the motor. It generates sinusoidal waves T_n (timing pulses: T_1 to T_{252} for each dot-line) of which the frequency is proportional to the motor speed.

(2) Resetting Detector

The resetting detector consists of a reed switch (normally open) and a permanent magnet fixed to the lead cam. It generates one pulse per dot-line. One reset pulse per print cycle is used for resetting the timing pulse counter.

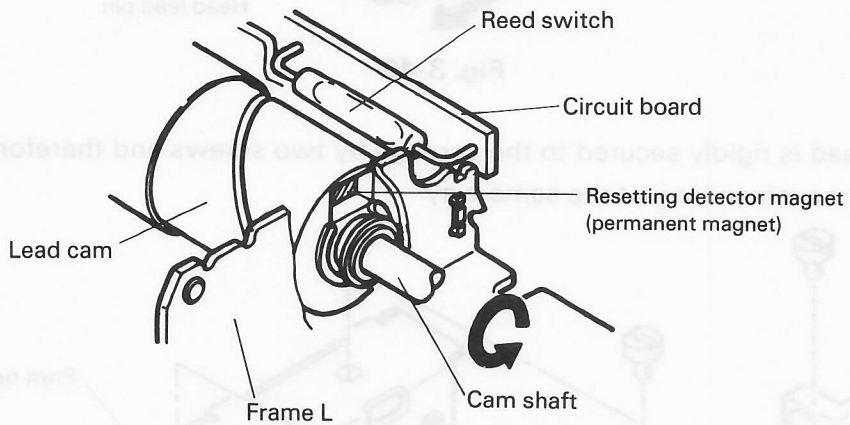

Fig. 3-44

3.4.4 Printing Mechanism

The printing mechanism has two functions: moving the print head, and printing.

(1) Moving the Print Head

As shown in Fig. 3-45, the print head is mounted on a carriage which smoothly moves reciprocatively between frames L and R along two print head guide shafts and in parallel with the platen.

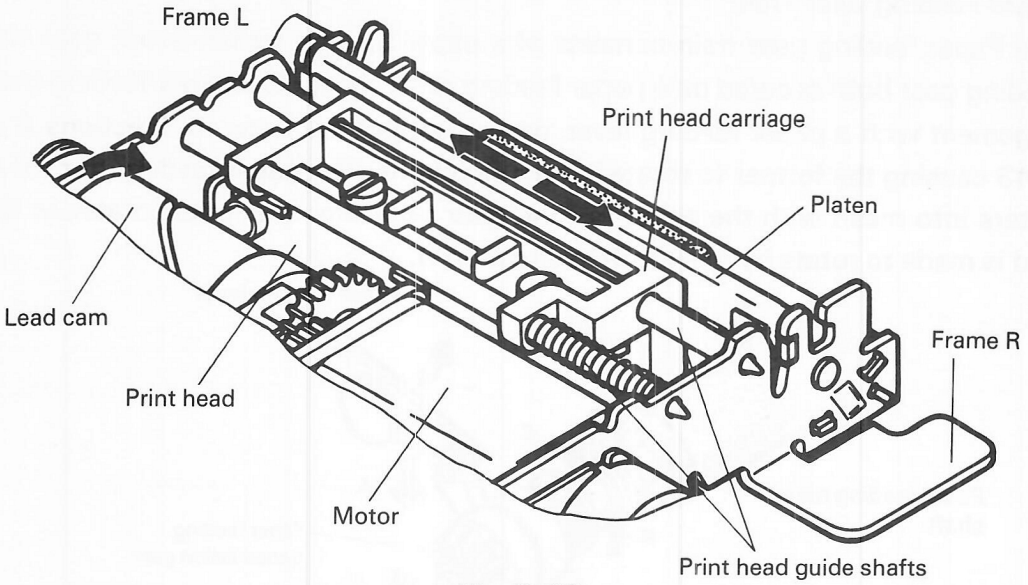

Fig. 3-45

Movements of the print head take place as follows:

① The lead cam has a groove (cam groove) formed as shown in Fig. 3-46 and a print head drive pin secured to one end of the print head is engaged in this cam groove. Rotation of the lead cam in direction A causes the print head drive pin to move along the cam groove and consequently the print head to reciprocate as shown by arrow B.

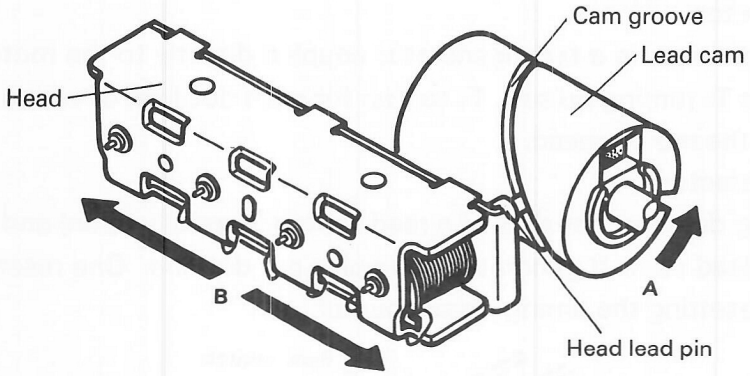

Fig. 3-46

② The print head is rigidly secured to the carriage by two screws and therefore they make reciprocative movement in just the same way.

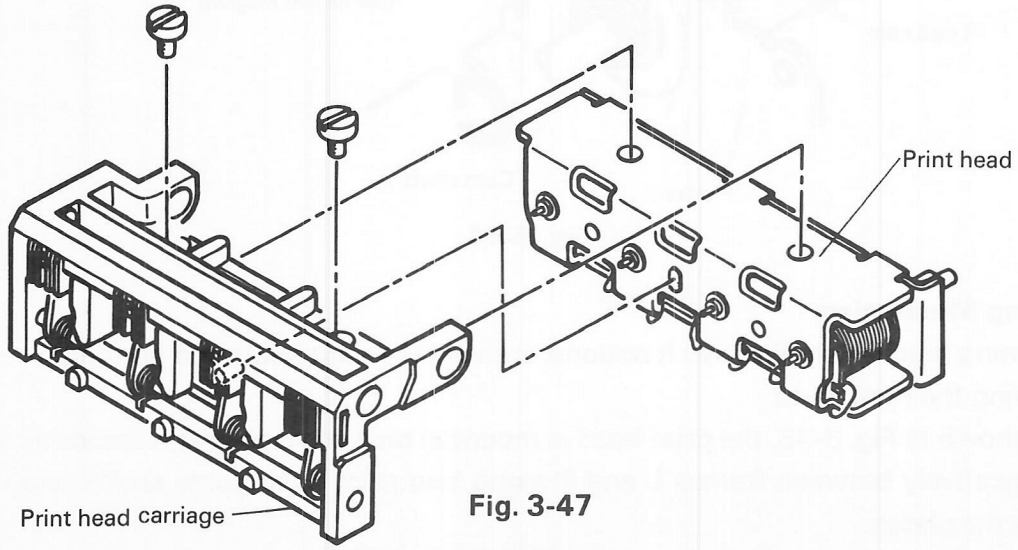

Fig. 3-47

(2) Printing Operation of Print Head

The print head contains four coil units, each of which consists of a core, a plunger and a push rod. In the print head carriage are provided four printing levers corresponding to the four coil units in the print head.

1) In printing a dot, the mechanism operates as follows:

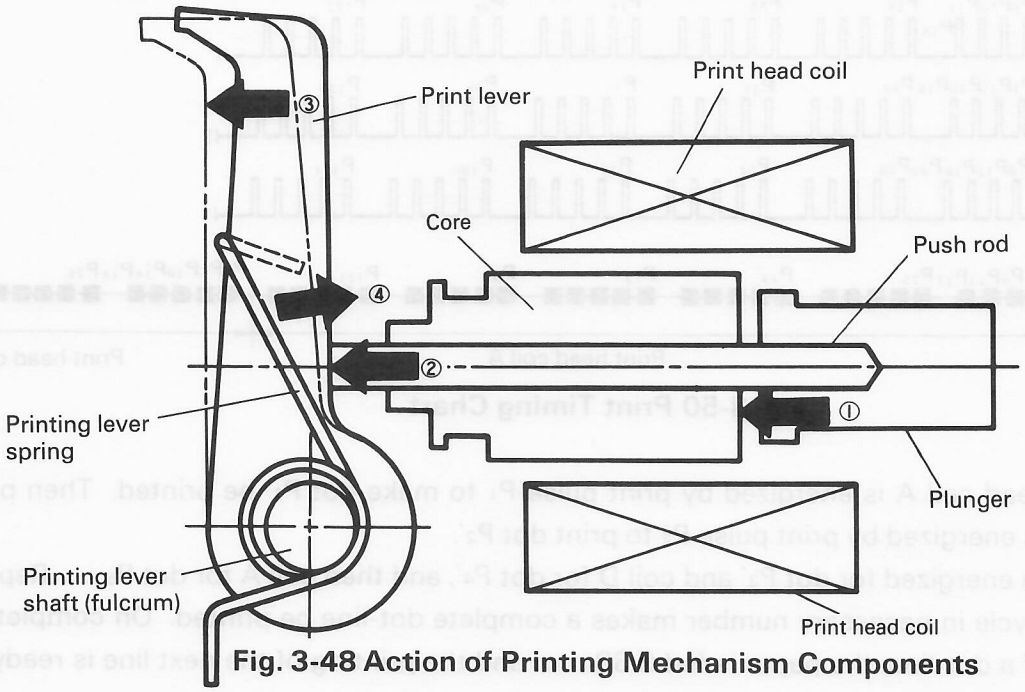

Fig. 3-48 Action of Printing Mechanism Components

① When the coil of a coil unit in the print head is energized, the associated plunger is attracted by the core (arrow ①). As the push rod is securedly fitted in the plunger, it is pushed by the plunger in the direction of arrow ② .

② The push rod then pushes the corresponding printing lever placed on a shaft (fulcrum) in the print head carriage in face of the platen, and consequently the lever is made to turn round the fulcrum in the direction of arrow ③ .

③ The printing lever thus pushed strikes the ribbon and paper against the platen to print a dot.

④ When the print head coil is deenergized, the printing lever is returned to home position by the action of spring (arrow ④).

2) In printing a dot-line, the print head operates as follows (with 5×7 dot-matrix):

① When the motor rotates, the tachogenerator directly coupled to it generates timing pulses of cycle time of approx. 0.6 msec (at 4.5V DC). Rotation of the motor also causes the lead cam to displace the print head approx. 0.33 mm in each 2.4 msec (at 4.5V DC).

How a dot-line is formed will be described referring to Figs. 3-49 and 3-50.

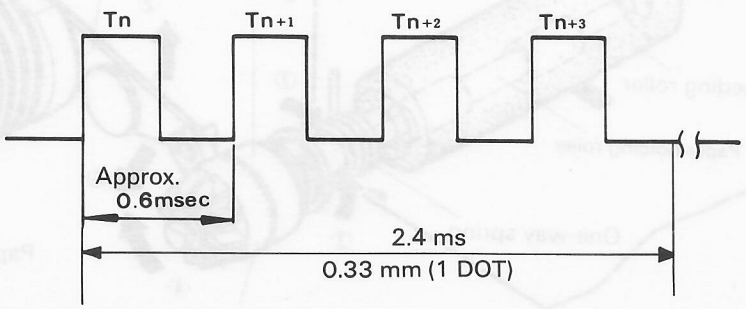

Fig. 3-49

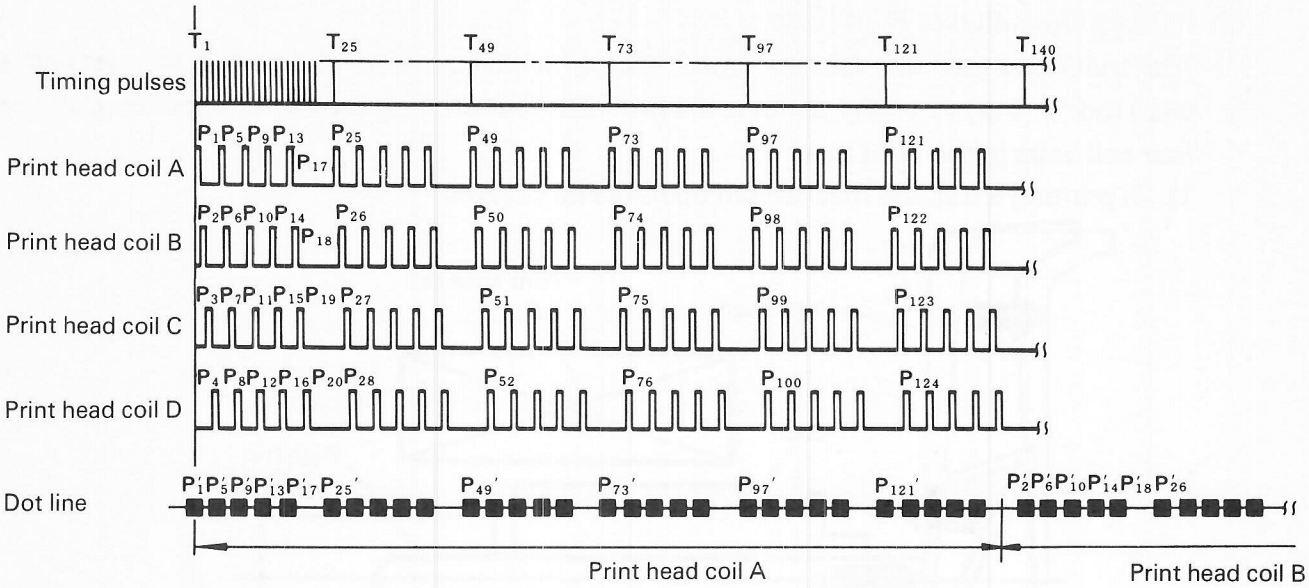

Fig. 3-50 Print Timing Chart

First, print head coil A is energized by print pulse P_1 to make dot P_1' be printed. Then print head coil B is energized by print pulse P_2 to print dot P_2'.
Coil C is then energized for dot P_3' and coil D for dot P_4', and then coil A for dot P_5 ..... Repetition of this cycle in necessary number makes a complete dot-line be printed. On completion of printing of a dot-line, the paper is fed 0.33 mm and the printing of the next line is ready to start.

3.4.5 Paper Feeding Mechanism

The paper feeding mechanism consisting of the components shown in Fig. 3-51 has normal paper feeding function and paper freeing function which permits drawing the paper out of the printer by pulling in the direction of feeding or the reverse direction. The arrows and encircled numbers in the figure below represent the directions of components' actions and the order in which the actions take place respectively.)

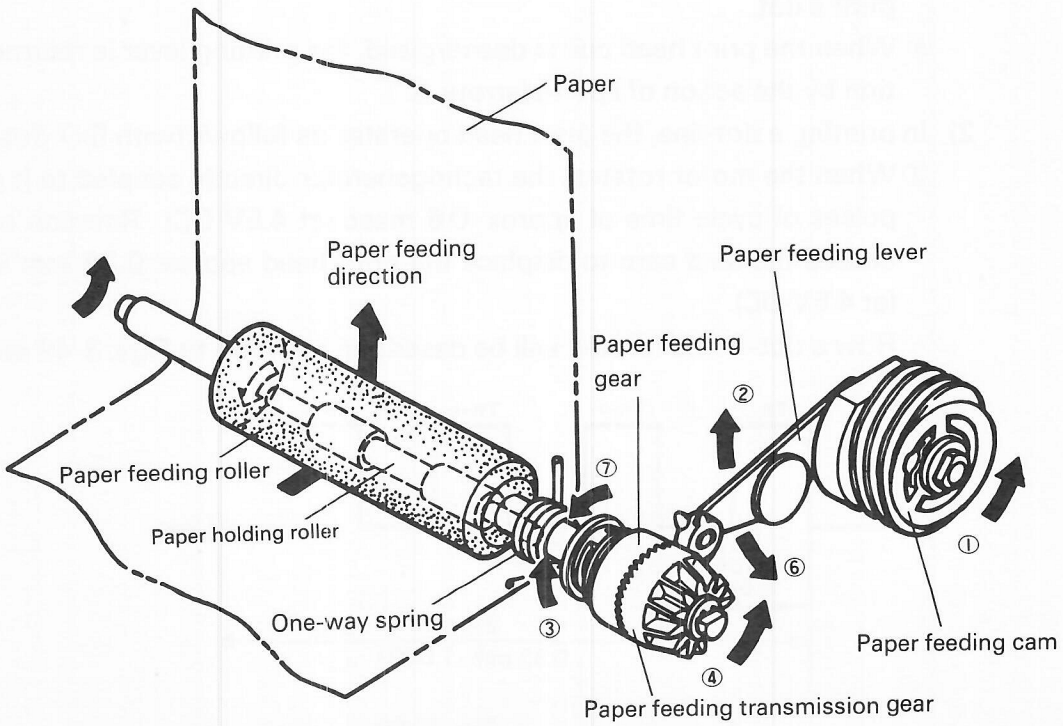

Fig. 3-51 Paper Feeding Mechanism

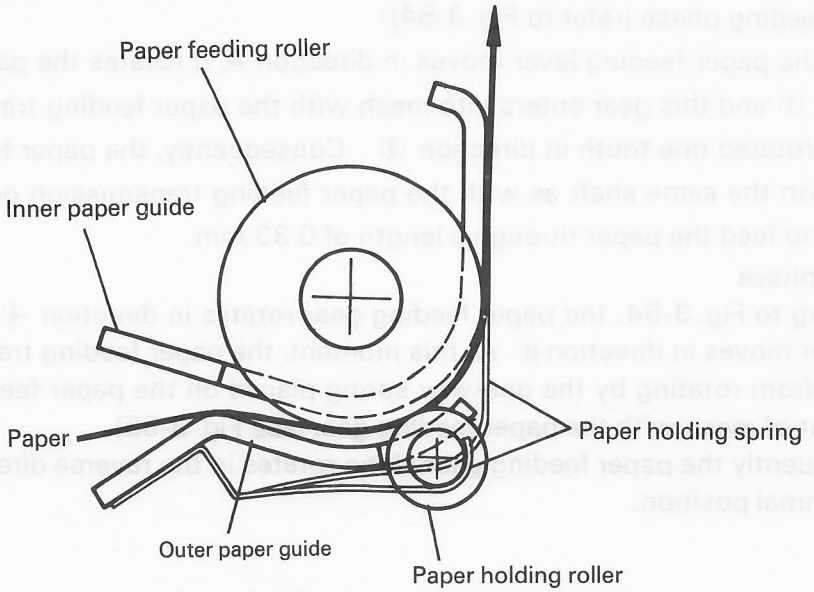

Fig. 3-52 Path of Printing Paper

(1) Operation of Paper Feeding Lever

A cam groove is formed internally of the ribbon feeding cam and the paper feeding lever is engaged in this internal cam groove at one end (A, Fig. 3-53). The paper feeding lever is thus moved round fulcrum C as the ribbon feeding cam rotates, and therefore the other end of the paper feeding lever shows a movement as shown by arrow B.

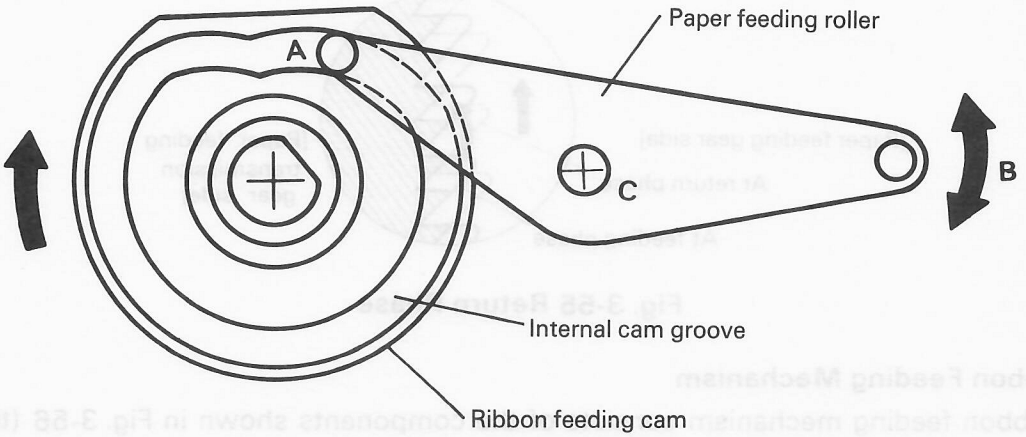

Fig. 3-53 Action of Paper Feeding Lever

(2) Operation of Paper Feeding Gear and Paper Feeding Transmission Gear

The paper feeding gear is driven in two directions alternately by the paper feeding lever, and the paper feeding transmission gear rotates intermittently by meshing with paper feeding gear only when the latter rotates in the predetermined one to the two directions.

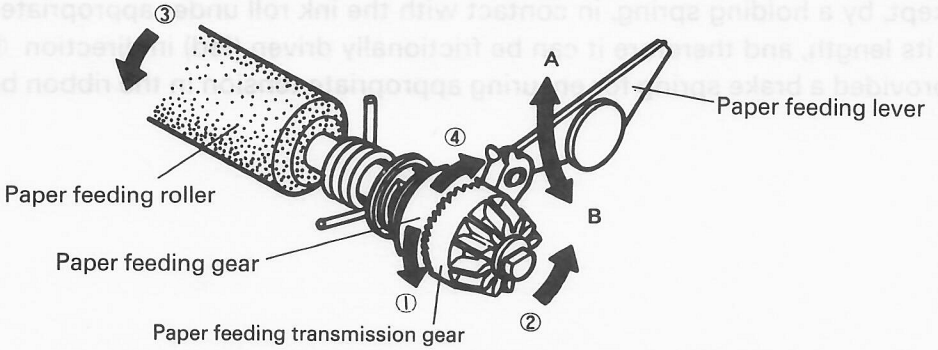

Fig. 3-54

① Paper feeding phase (refer to Fig. 3-54):

When the paper feeding lever moves in direction A, it rotates the paper feeding gear in direction ① and this gear enters into mesh with the paper feeding transmission gear, which is thus rotated one tooth in direction ② . Consequently, the paper feeding roller securedly placed on the same shaft as with the paper feeding transmission gear is rotated in direction ③ to feed the paper through a length of 0.33 mm.

② Return phase

Referring to Fig. 3-54, the paper feeding gear rotates in direction ④ when the paper feeding lever moves in direction Ⓑ. At this moment, the paper feeding transmission gear is prevented from rotating by the one-way spring placed on the paper feeding roller shaft and it goes out of mesh with the paper feeding gear (see Fig. 3-55).

Consequently the paper feeding gear alone rotates in the reverse direction and thus returns to the initial position.

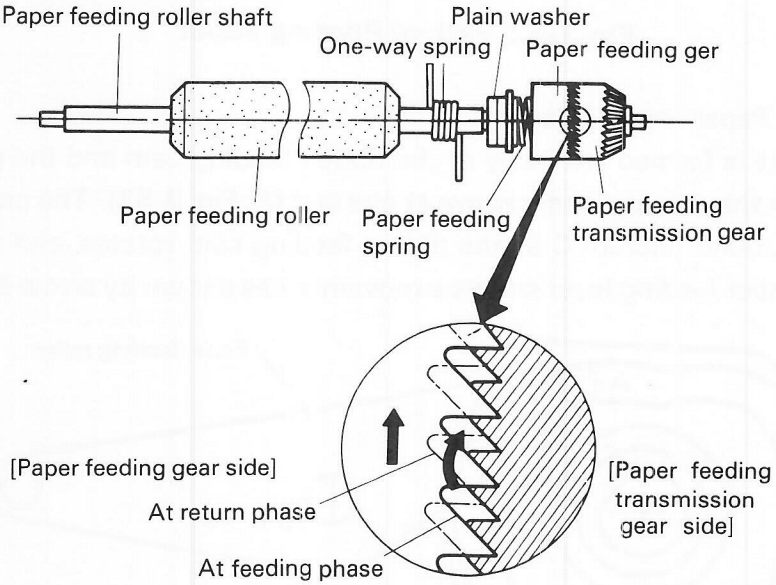

Fig. 3-55 Return Phase

3.4.6 Ribbon Feeding Mechanism

The ribbon feeding mechanism consists of the components shown in Fig. 3-56 (the arrows indicate the directions of the respective components' movements).

When the specially shaped ribbon feeding cam rotates in direction ① , the ribbon feeding gear in engagement with this cam and the spool gear rotate in direction ② and ③ , respectively. The rotation of the spool gear causes rotation of the spool gear shaft, which rotates only in the same direction as with the spool gear. The spool gear is in engagement with the ribbon feeding roller of the ribbon cassette, and therefore the ink roll securedly placed on the ribbon feeding roller rotates in direction ④. The inked ribbon contained in the ribbon cassette is kept, by a holding spring, in contact with the ink roll under appropriate pressure over a part of its length, and therefore it can be frictionally driven (fed) in direction ⑤ . In the cassette is provided a brake spring for ensuring appropriate tension in the ribbon between points A and B.

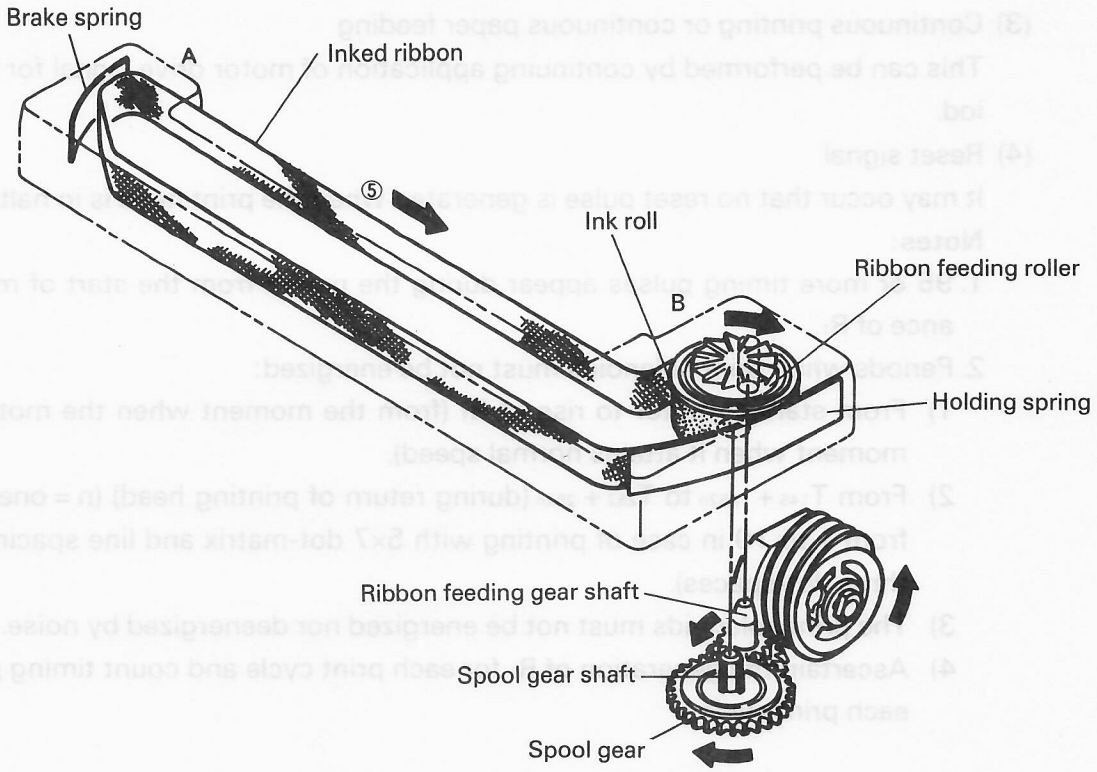

Fig. 3-56 Ribbon Feeding Mechanism

3.4.7 Printing Operation One Print Cycle

Fig. 3-57 and Fig. 3-58 show the timing chart of the pulse signals to perform a printing cycle.

(1) Printing and paper feeding

First, print solenoid A is energized by pulse P_1 lasting from T_1 to T_2 to print the top left dot for the character to be printed in No. 24 column. Then, print solenoid B is energized by pulse P_2 lasting from T_2 to T_3 to print the top left dot for the character to be printed in No. 18 column. Such operation is repeated, and print solenoid D is energized by pulse P_{140} lasting from T_{140} to T_{141} to print the top right dot for the character to be printed in No. 1 column.

After printing in the rightmost columns (Nos. 19, 13, 7 and 1 columns) to be covered by the respective solenoids, the print head is moved for another dot space and then returned to the home position while timing pulses T_{144} to T_{252} pass. At the same time, the paper is automatically fed one dot-line. The above operation is repeated continuously for seven dot-lines. Then printing in the seventh dot-line starts. After print solenoid D has been energized by pulse P_{1652} lasting from T_{1652} to T_{1653} to print the right lowermost dot desired for the character to be printed in No. 1 column for completing the 5×7 matrix character in No. 1 column.

Next, the paper is fed three dot-lines (eighth, ninth, and tenth dot-lines) to provide a character line spacing equivalent to three dot-spaces, and one print cycle ends at T_{2520}.

(2) Designation of reset pulses R_1 and R

The first reset pulse appearing after 95 timing pulses have been counted since application of motor drive signal is designated as R_1. The reset pulses to come first after another 95 timing pulses are designated as $R_2 - R_n$.

Initial setting for ascertaining that the printing head is in home position is automatically finished with detection of R_1. Timing pulse T_1 to indicate the line start position for each print cycle is determined through detection of R_1.

(3) Continuous printing or continuous paper feeding

This can be performed by continuing application of motor drive signal for the desired period.

(4) Reset signal

It may occur that no reset pulse is generated when the print head is in halted state.

Notes:

1. 95 or more timing pulses appear during the period from the start of motor to appearance of R_1.
2. Periods when print solenoids must not be energized:
   1) From start of motor to rise of R_1 (from the moment when the motor starts to the moment when it attains normal speed).
   2) From $T_{145} + {}_{252n}$ to $T_{252} + {}_{252n}$ (during return of printing head) (n = one of the integers from 1 to 10 in case of printing with 5×7 dot-matrix and line spacing equivalent to three dot-spaces).
   3) The print solenoids must not be energized nor deenergized by noise.
   4) Ascertain the generation of R_1 for each print cycle and count timing pulses anew for each print cycle.

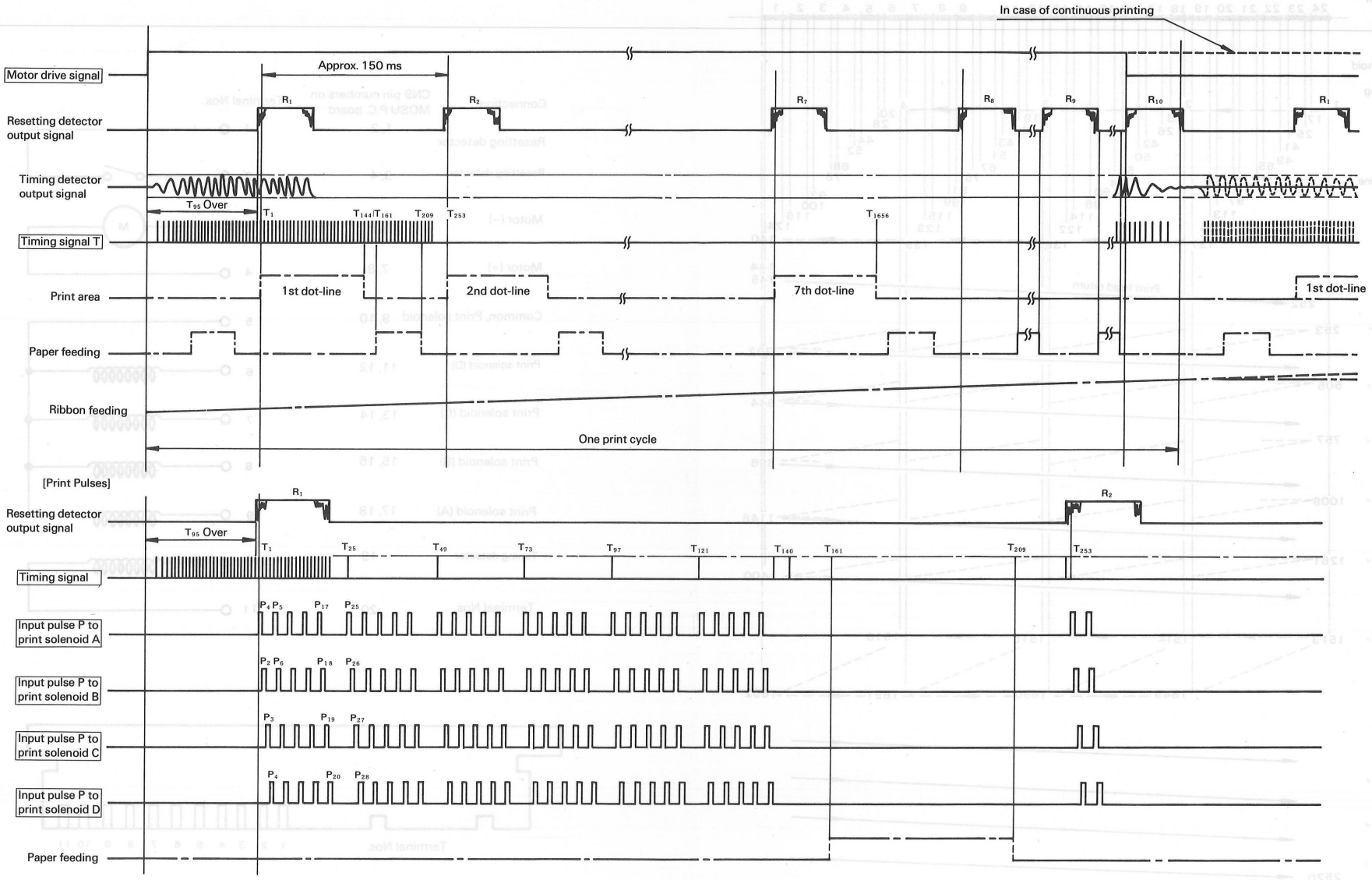

Timing chart for printing with 5x7 dot-matrix and line spacing equivalent to three dot spaces: The pulses enclosed in ☐ are to be provided by the customer.

Fig. 3-57

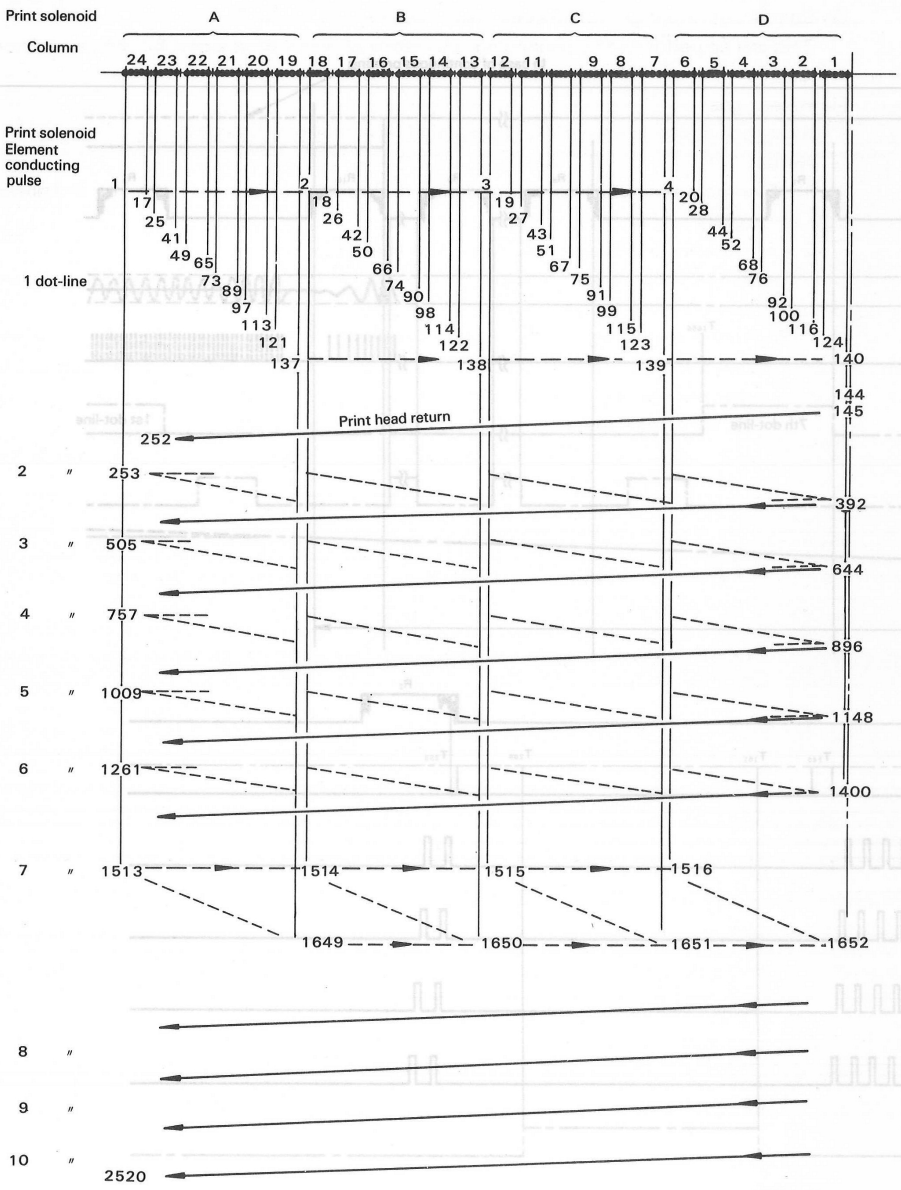

NOTE: $P_n = T_n - T_{n+1}$ (P_n: Print solenoid element conducting pulse
T_n: Timing pulse)

Timing pulse assignment (for printing with 5x7 dot-matrix and line spacing equivalent to three dot spaces)

Fig. 3-58

3.4.8 Terminal Contacts Arrangement

Connection	CN9 pin numbers on MOSU P.C. board
Resetting detector	1, 2
Resetting detector	3, 4
Motor (–)	5, 6
Motor (+)	7, 8
Common, Print solenoid	9, 10
Print solenoid (D)	11, 12
Print solenoid (C)	13, 14
Print solenoid (B)	15, 16
Print solenoid (A)	17, 18
Timing detector	19
Terminal Nos.	20

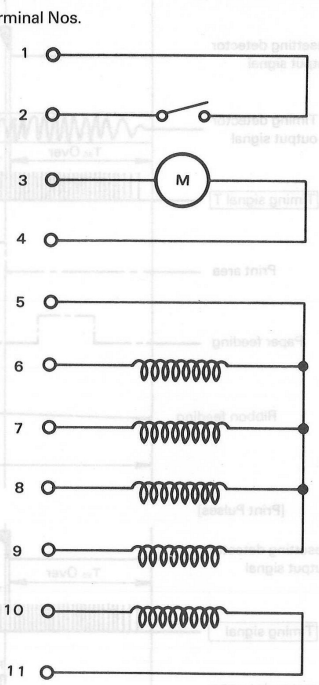



Fig. 3-59

3.4.9 Control Circuit

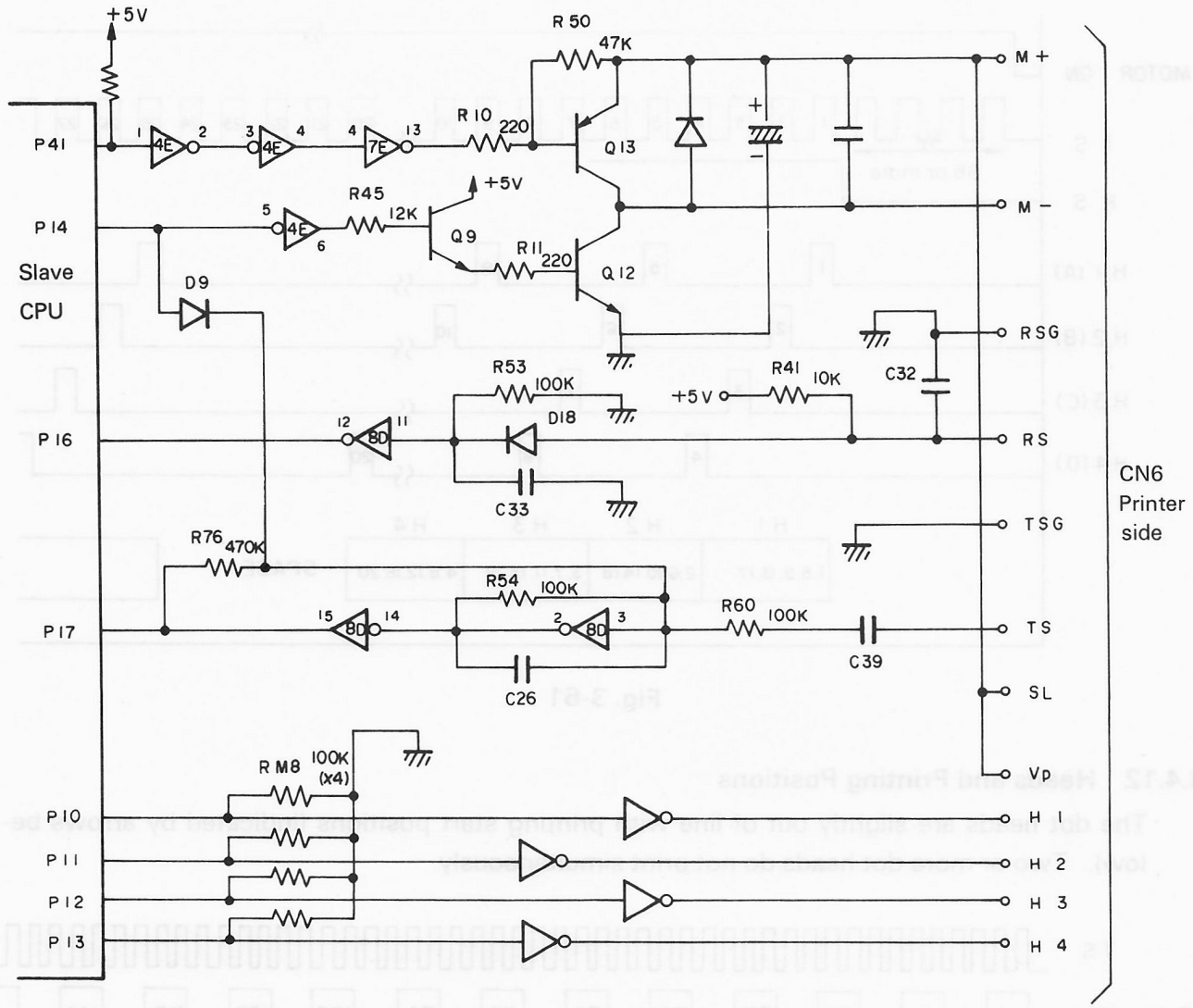

Fig. 3-60

3.4.10 Printing Start

Before operating the microprinting, make sure that P41 is at low level, and then set P14 to low level. As a result, transistors Q9 and Q12 are turned on, M- goes to ground level, and the +5V is routed from M+ to M– (GND) via the motor coils to feed a current and turn the motor.

When the printer motor runs, the tachogenerator which is directly coupled to the motor generates a TS (timing signal) about every 0.6 msec. The TS signal is received by the slave CPU 6301 at P17, which counts it and waits for a reset signal (RS) from the printer.

If an RS signal comes from the printer before the TS signal count reaches 95, the RS signal is ignored, and the printer keeps running the motor until the next RS signal comes.

When an RS signal is received after the TS signal count is 95 or more, the printer starts printing.

(This process is intended for withholding printing until the carriage can move at constant speed because, if characters are printed while the head carriage is unsteady in operating speed, printed dots come out uneven in density. The head carriage becomes steady in operating speed by the time the TS signal count is 95.)

3.4.11 Print Timing

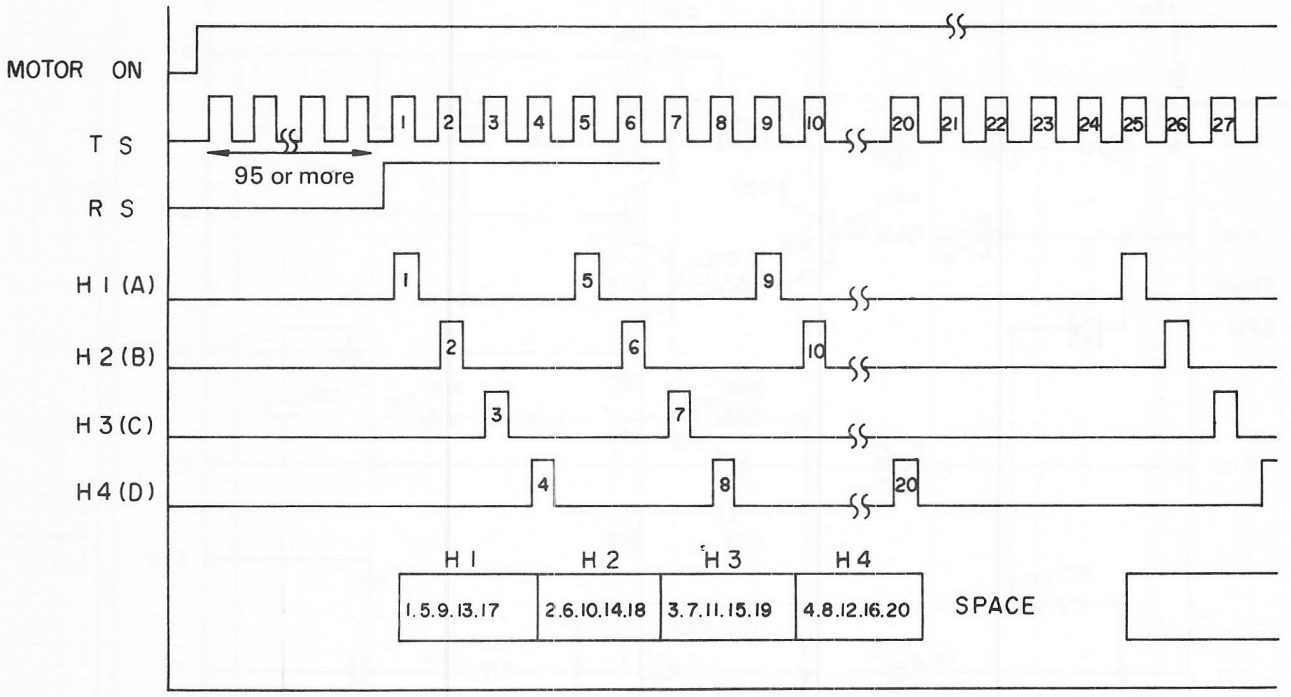

Fig. 3-61

3.4.12 Heads and Printing Positions

The dot heads are slightly out of line with printing start positions (indicated by arrows below). Two or more dot heads do not print simultaneously.

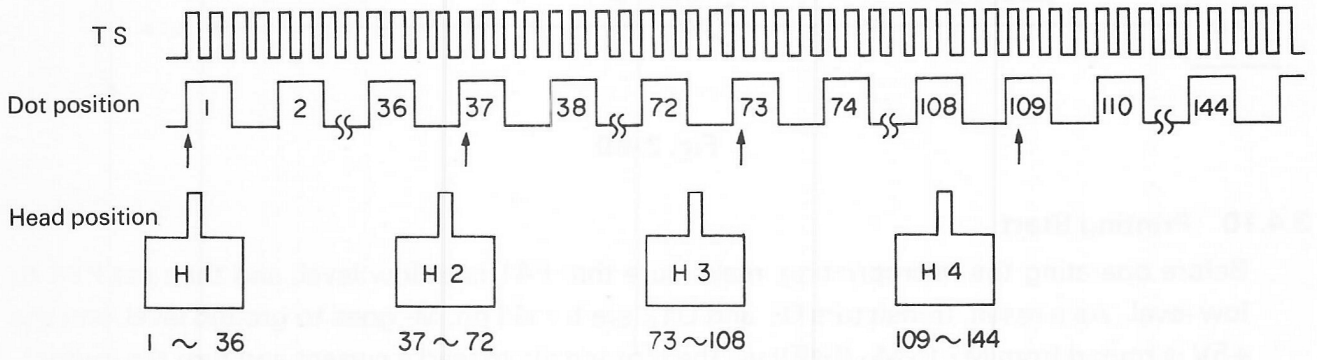

Fig. 3-62

The printer has 4 printing heads, whose physical positions are as shown in Fig. 3-73. Specifically, H2 1 TS left of the printing start position; H3, 2 TSs left of it; and H4, 3 TSs left of it. Thus, only one of the printing heads H1 to H4 can operate against one TS so a plurality of printing heads cannot simultaneously operate.

As shown in the print timing example, a reset signal (RS) represents a printing start. Thus, the TS which is output immediately after RS is on signifies the print timing of each head. TS No. 1 in the timing chart is for H1; TS No. 2 for H2; TS No. 3 for H3; and TS No. 4 for H4. One dot line (a total of 144 dot positions) is printed by repeating this operation 36 times.

A character has 7 dots in the vertical direction so, if the above operation is repeated 7 times (144 x 7 = 1008 dot positions) and the paper is line-spaced 1 dot, 24 characters are printed in a line.

3.4.13 Example of Printing

Examples of printing are shown below.

1st to 6th columns (H1): Letter A

7th to 12th columns (H2): Letter E

13th to 18th columns (H3): Numeral 8

19th to 24th columns (H4): Letter H

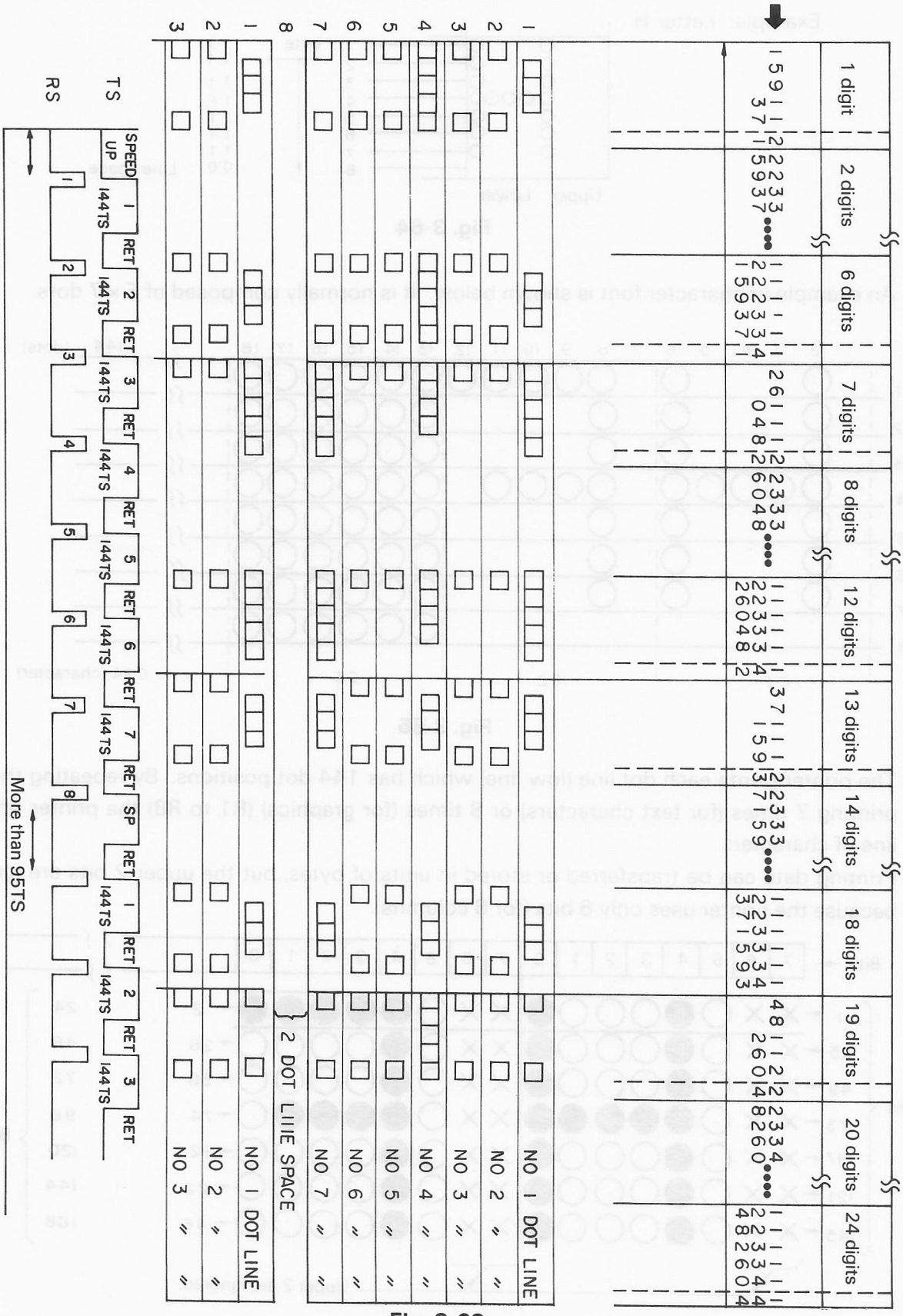

Fig. 3-63

3.4.14 Character Generators

Printed characters are composed of dot matrixes, and dot patterns are generated from character codes (ASCII codes).

For this purpose, character generators are built into external ROMS 11E and 12E.

Each text character consists of 5×7 dots, and 8 bytes (7 bytes for a character and 1 byte for a line space) are used to compose a single character font.

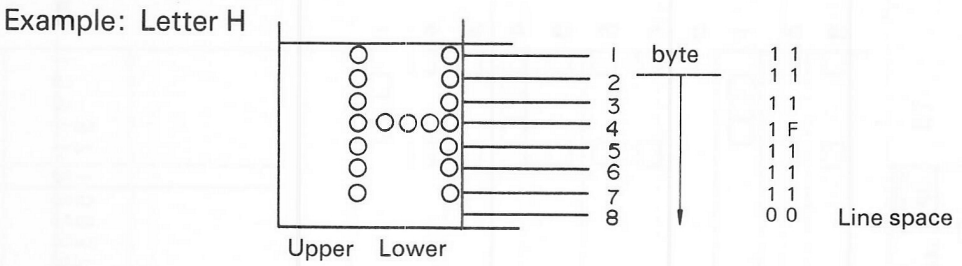

Fig. 3-64

An example of character font is shown below. It is normally composed of 5 x 7 dots.

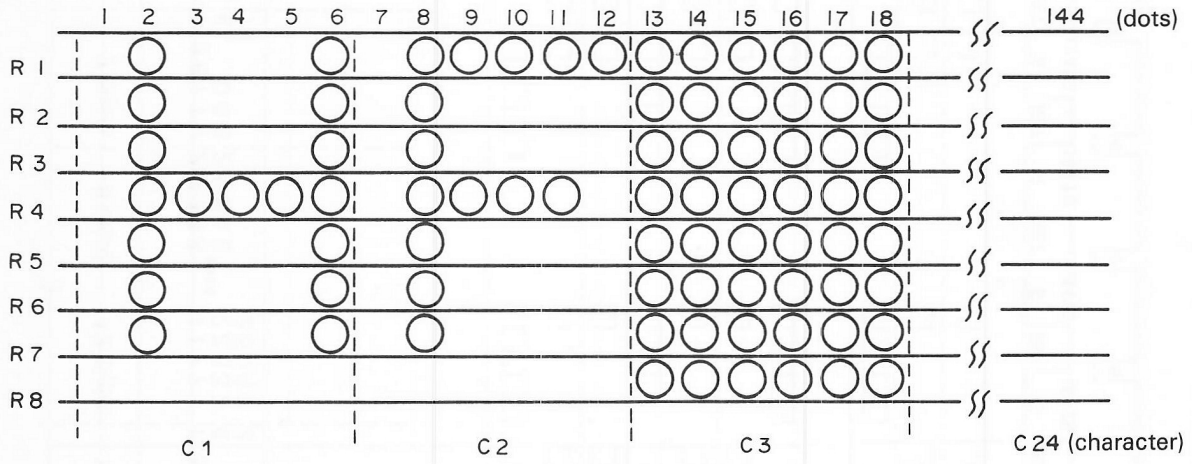

Fig. 3-65

The printer prints each dot line (low line) which has 144 dot positions. By repeating this dot printing 7 times (for text characters) or 8 times (for graphics) (R1 to R8) the printer prints a line of characters.

Printing data can be transferred or stored in units of bytes, but the upper 2 bits are ignored because the printer uses only 6 bits (for 6 columns).

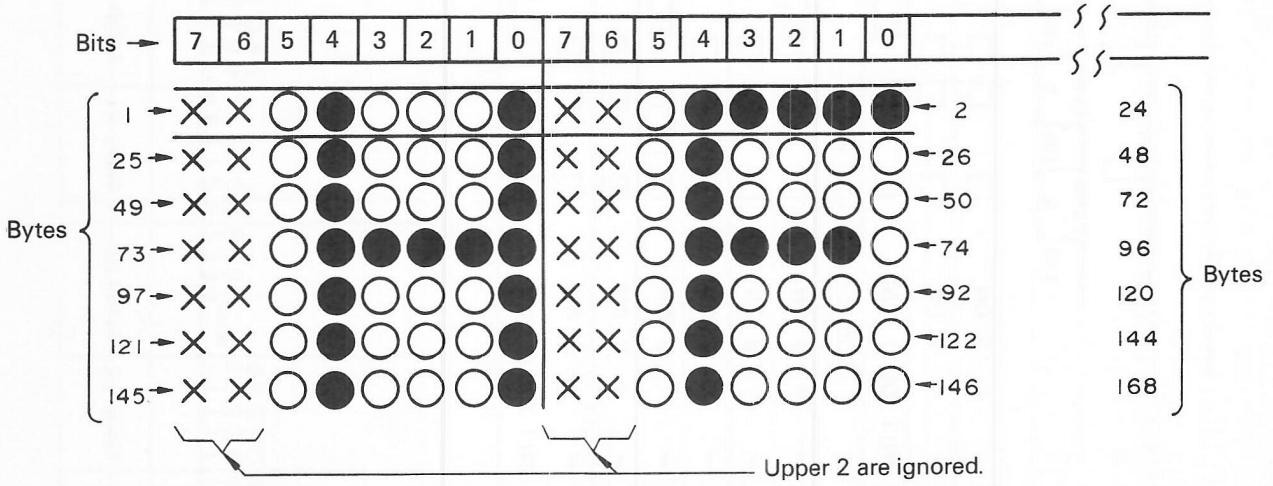

Fig. 3-66

3.4.15 Printing Process

Printing data tarnsfer to the printer is performed in the following order.

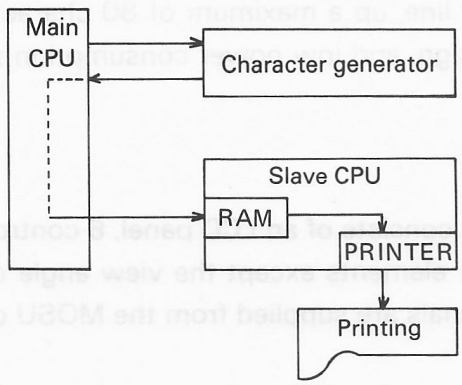

Fig. 3-67

(1) A line of printing data is read and stored. (24 characters) (Main CPU)

(2) A print command is sent to the slave CPU. (The slave mode is selected.)

- The printer motor is turned on. (Slave CPU)

(3) A font of 1 dot line is generated by the character generator, and sent to the slave CPU. (144 dots)

- The data is stored in the RAM, and waits for printing start timing. (An RS signal after TS count of 95 or more)

(Slave CPU)

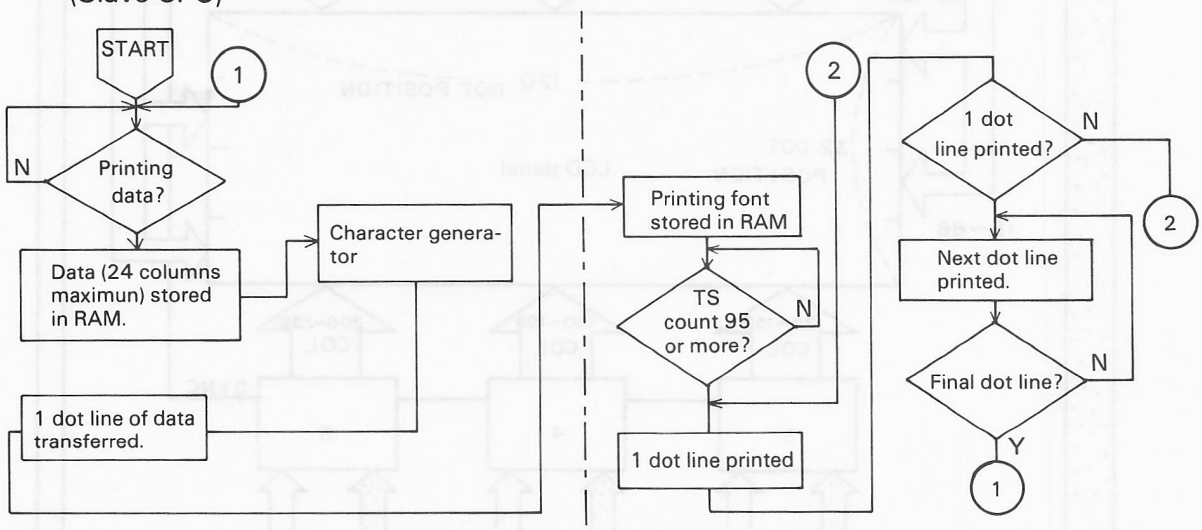

Fig. 3-68

3.4.16 Printing End

The RS signal that follows the printing of the final dot line of printing data (7 dot lines) effects a character reset, and a request is sent to the control program (stored in a 4k mask ROM) of the slave CPU 6301 for the next data transfer.

If there is no more printing data, the head carriage moves one way and back to line space the paper by 1 dot line, and the printing operation is brought to an end in the following sequence.

(1) P14 of the slave CPU 6301 goes high to turn off transistors Q9 and Q12, thus turning motor power off.

(2) P41 goes high to turn on Q13, by which the counterelectromotive force generated by the moment of inertia of the motor is utilized to brake the motor and thus stop it in the shortest distance.

3.5 Liquid Crystal Display

The liquid crystal panel (LCD) has a 20 x 32 dot matrix and each character consists of 5 x 7 dots. It can display 20 characters per line, up a maximum of 80 characters on the screen. The LCD features lightweight, thin design, and low power consumption so it is an ideal display unit for the HX-20.

3.5.1 Hardware Composition

(1) The liquid crystal display (LCD) unit consists of an LCD panel, 6 control ICs, and a voltage dividing circuit. All the component elements except the view angle control element are mounted on a single substrate. Signals are supplied from the MOSU circuit board via the keyboard.

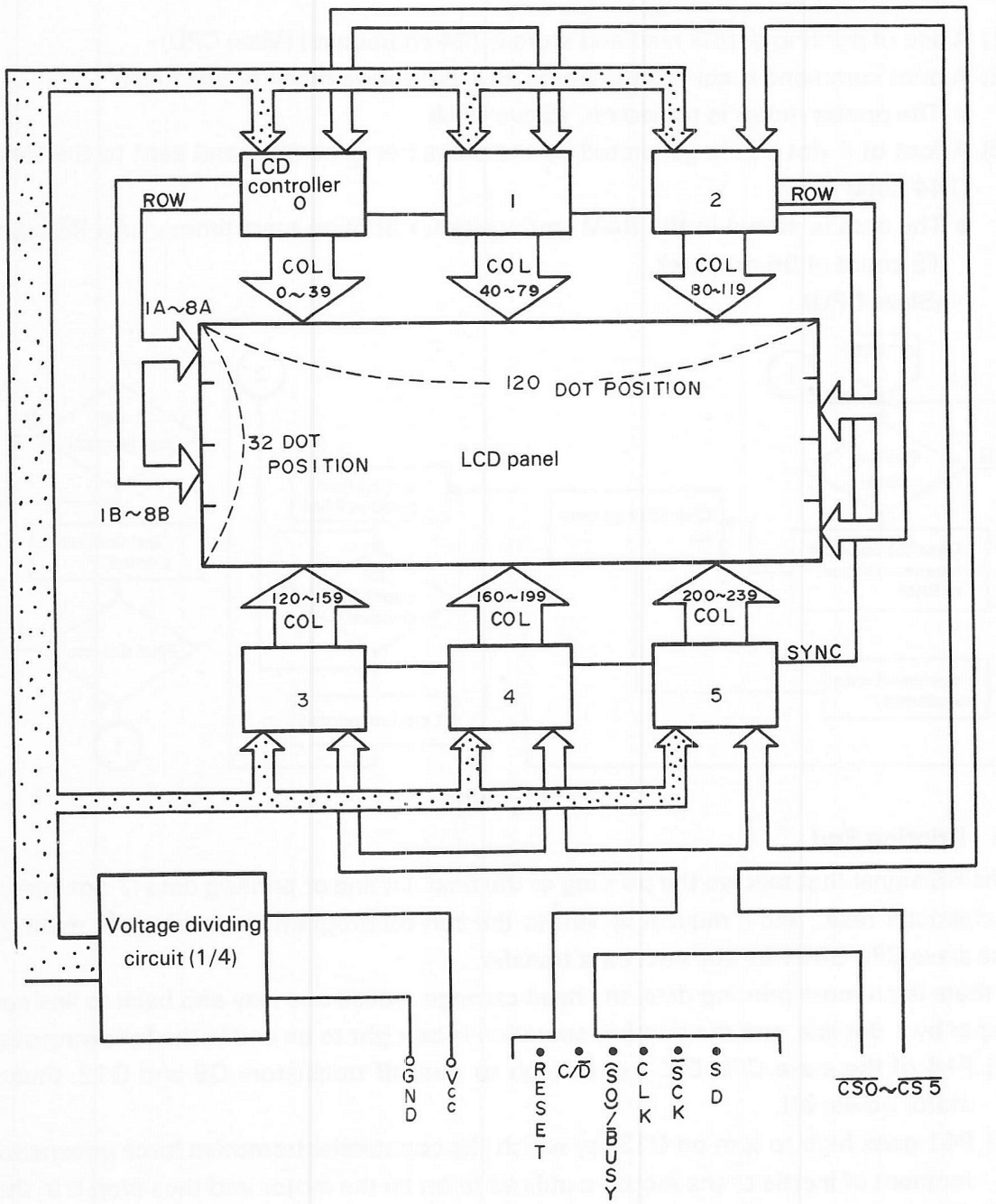

Fig. 3-69 Block Diagram

(2) The LCD unit has one panel, 6 control ICs (μPD 7227s), 7 resistors, and 5 capacitors, and their locations and the arrangement of the pins are as shown below.

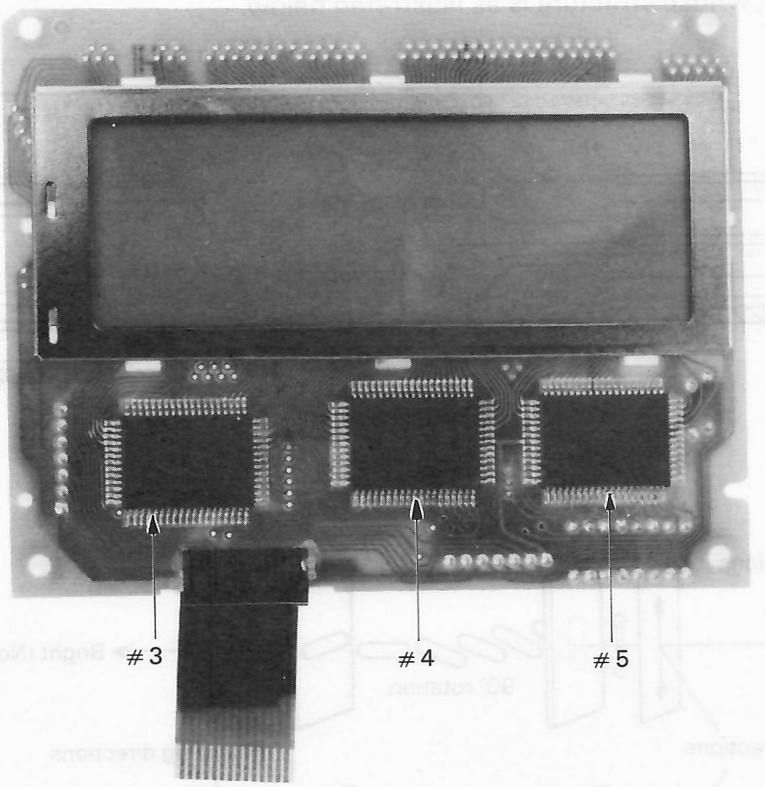

Fig. 3-70

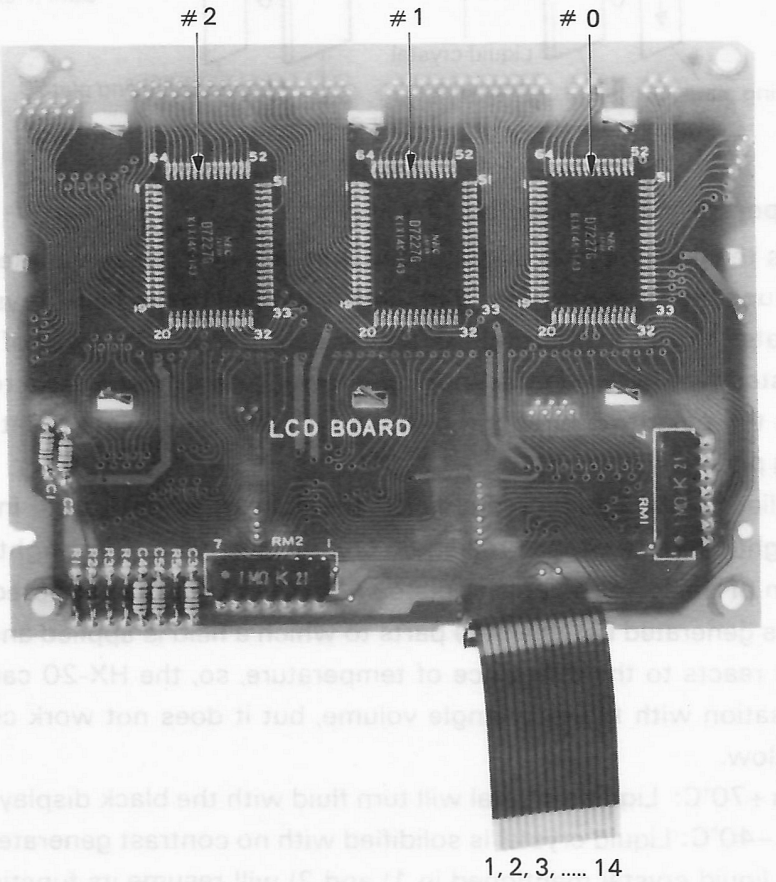

Fig. 3-71

3.5.2 LCD Panel

The HX-20 employs a liquid crystal display of the twisted nematic type (TNM), a kind of voltage effect type, whose structure is as illustrated below.

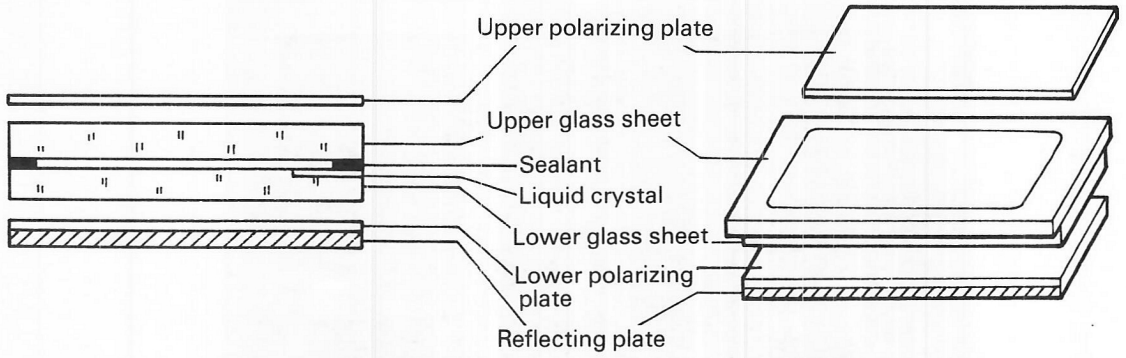

Fig. 3-72

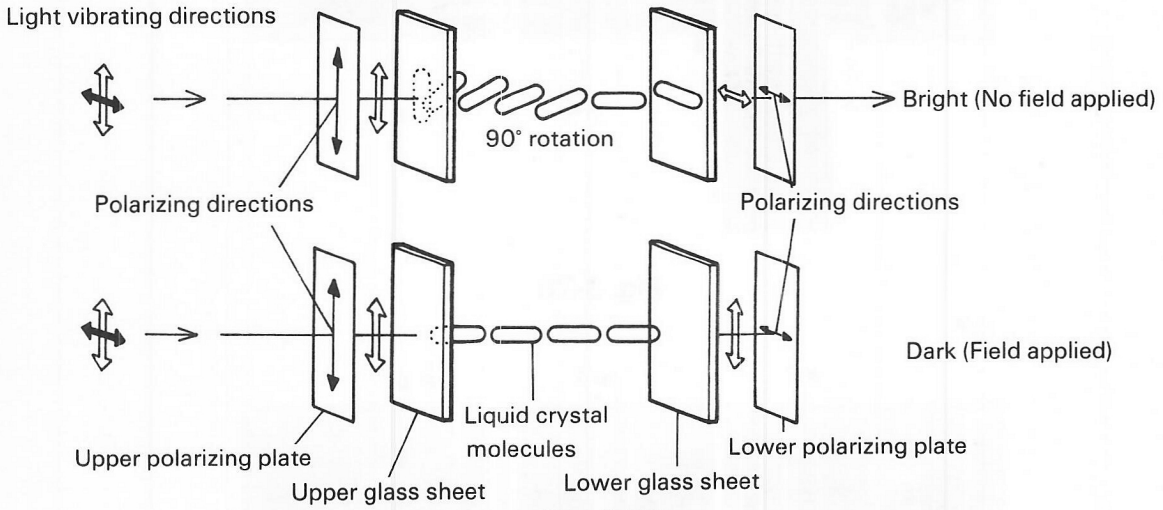

Fig. 3-73

3.5.3 Theory of Operation of LCD Panel

As light reaches the liquid crystal display, only that part of it which vibrates in a single direction passes the upper polarizing plate. If no field is applied to the liquid crystal layer, this light component rotates 90° in its vibrating direction as it passes the layer of liquid crystals arranged in a twisted way between the upper and lower glass sheets. As a result, the vibrating direction meets the polarizing direction of the lower polarizing plate to let the light pass the lower polarizing plate.

If a field is applied to the liquid crystal layer, the light does not rotate in the liquid crystal layer, and the light that has passed the liquid crystal layer vibrates at right angles to the polarizing direction of the lower polarizing plate so that the light is interrupted. It is in this way that a contrast is generated between the parts to which a field is applied and the other parts.

- Liquid crystal reacts to the difference of temperature, so, the HX-20 carries out temperature compensation with the view angle volume, but it does not work correctly under the conditions below.

  1) More than +70°C: Liquide crystal will turn fluid with the black display.

  2) Less than −40°C: Liquid crystal is solidified with no contrast generated on the display.

  However, the liquid crystal mentioned in 1) and 2) will resume its function when the temperature returns normal.

3.5.4 Display Control

Each control IC μPD 7227 has two data memories (banks 0 and 1), and each memory has a capacity of 40 x 8 bits. Each control IC controls 40 columns. The No. 0 μPD 7227 controls the first and second rows; the No. 2, the third and fourth rows; and the data stored in the memories are read out every row and every line to display on the panel.

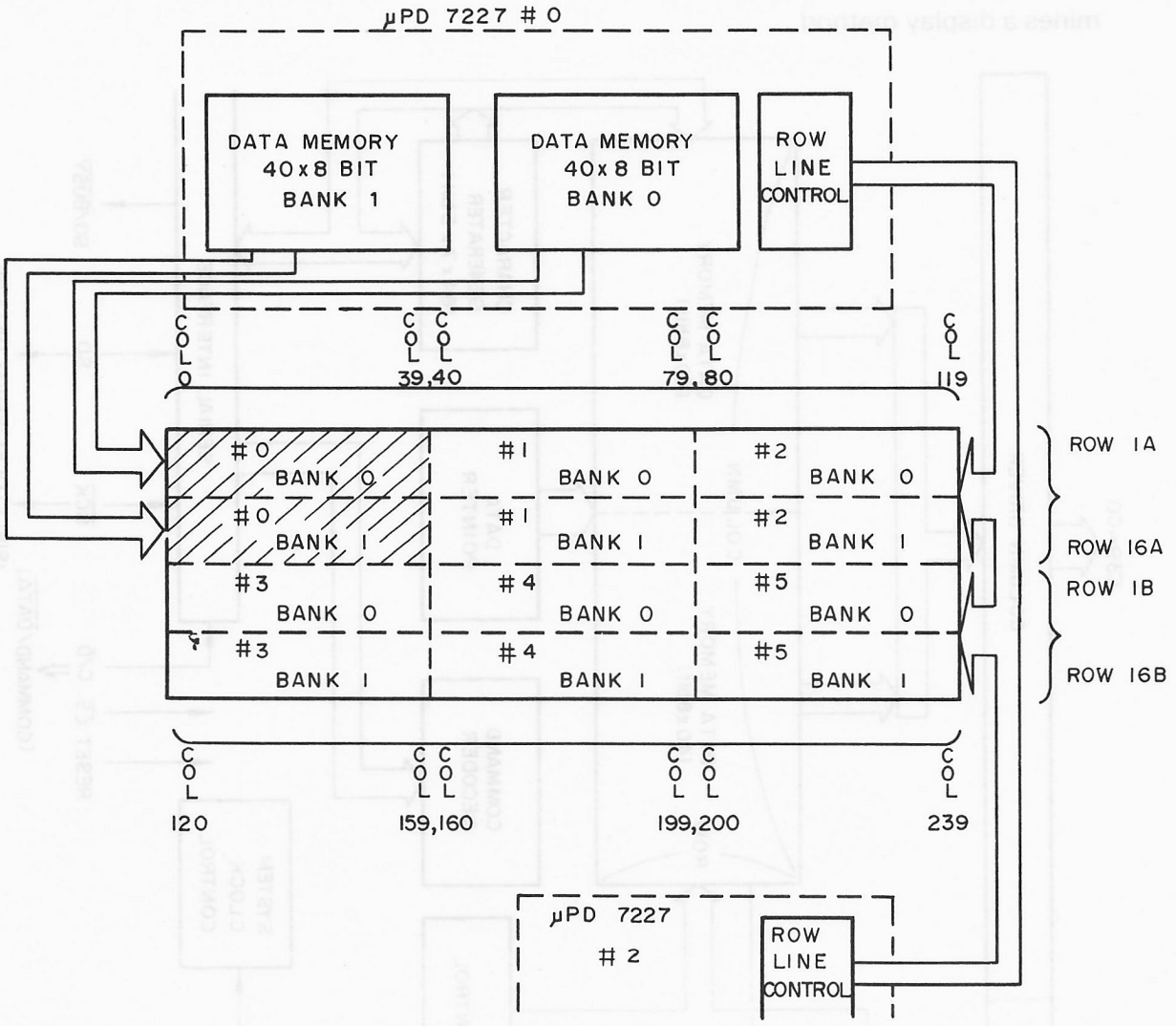

Fig. 3-74

3.5.5 Display Initializing

A reset signal is sent from the reset circuit on the MOSU circuit board after power is turnd on to initialize the LCD control ICs (μPD 7227s). Then, the program sends the following setting commands.

(1) SFF (Set Frame Frequency): The clock input to the CLOCK terminal is divided to the ratio specified by the command to determine internal control timing.

(2) SMM (Set Multiplexing Mode): This command designates a two driver function, time division number, memory banks, SYNC terminal input/output operations, and thus determines a display method.

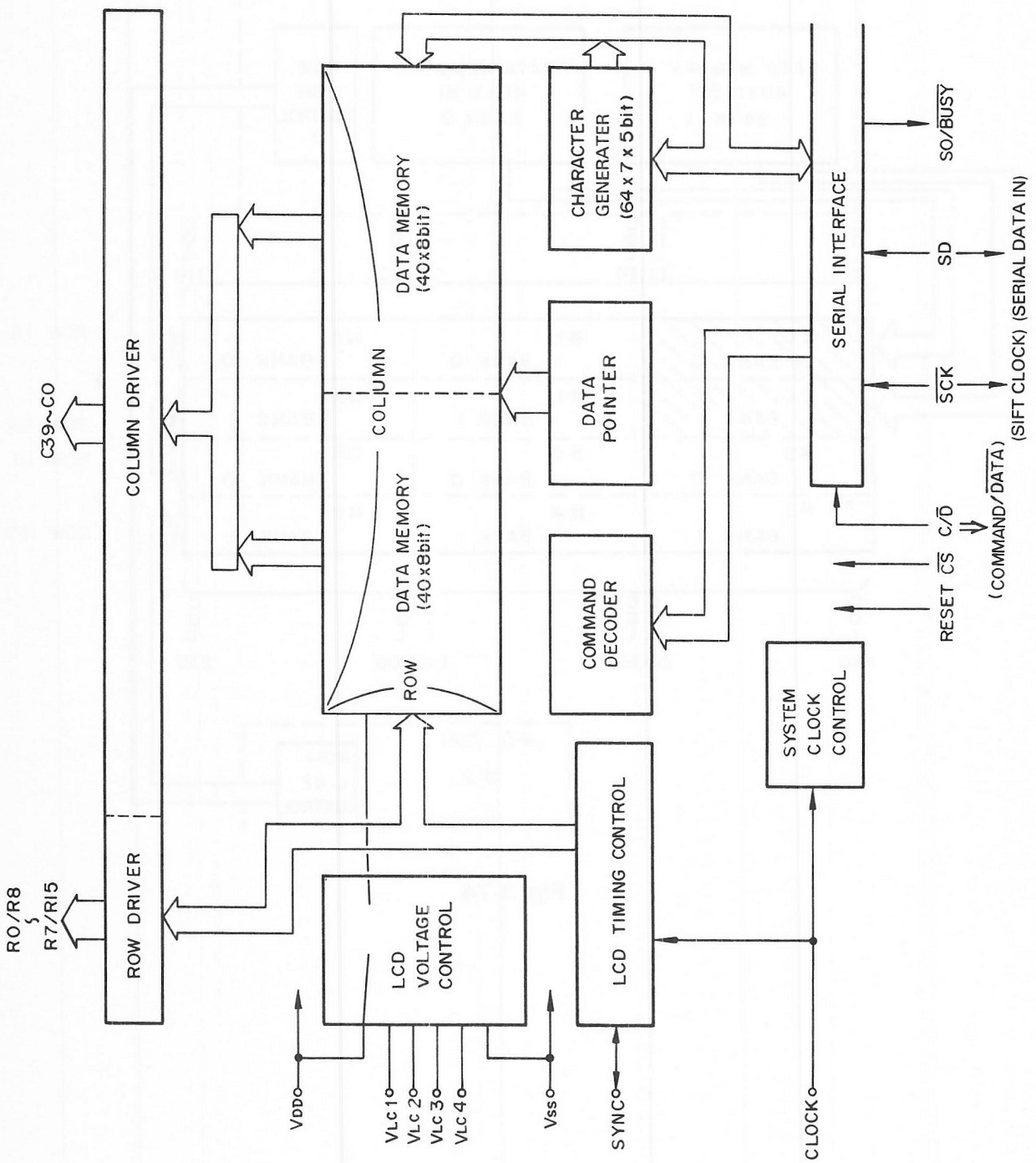

Fig. 3-75

(3) DISP ON (Display On): This command sets the LCD in a state of waiting for display data.

3.5.6 Display Data Transfer

The character generators in the ICs μPD 7227s are not used for generating display data. It is necessary, therefore, to write the dot patterns (display data) generated by the character generators in the ROMs on the MOSU circuit board into the data memories in the ICs μPD 7227s. Before each transmission of display data, the command SWM (Set Write Mode) must be prefixed to the data. Shown below is an example of display data transfer where a single character is transmitted.

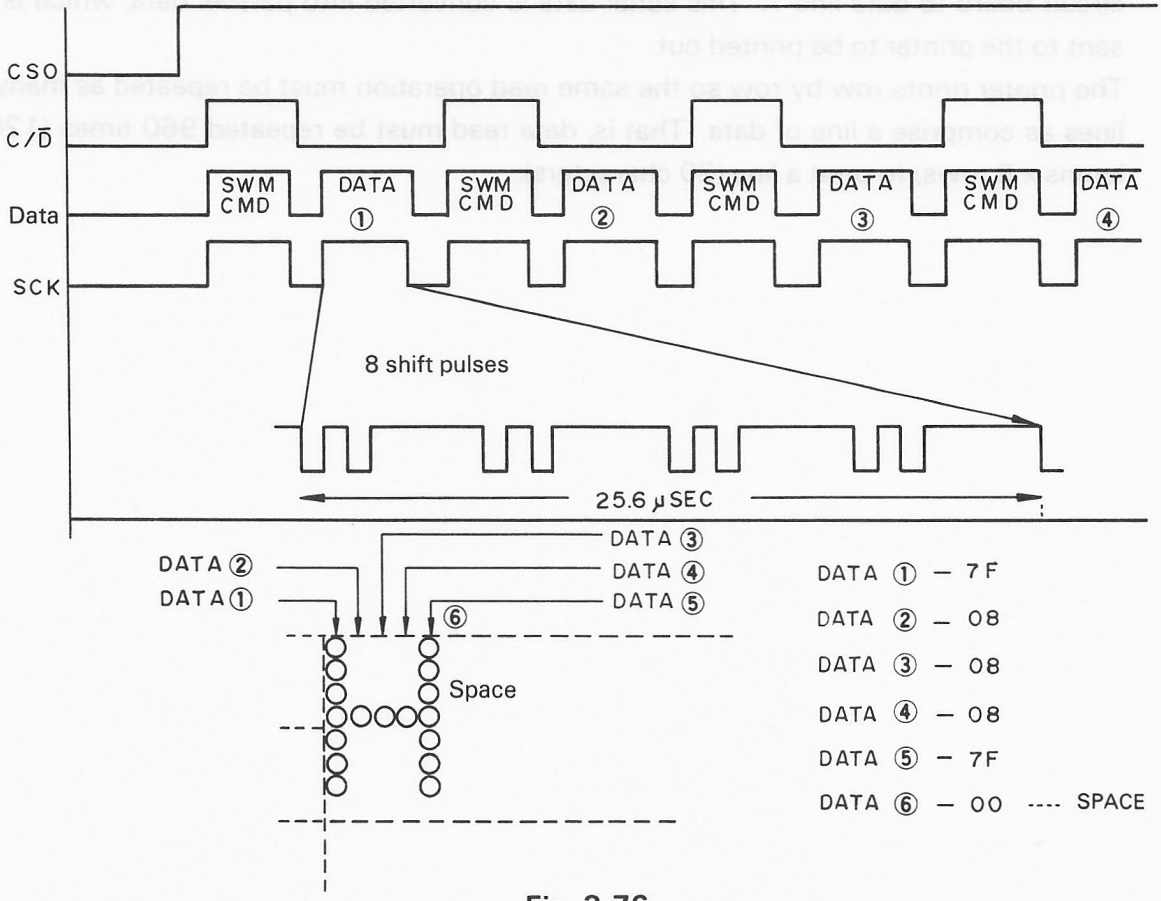

Fig. 3-76

One character is composed of a 5 × 7 dot matrix, and a space corresponding to one dot is necessary between adjacent characters. This means that 6 bytes each of data and command (a total of 12 bytes) are necessary to display a single character.
That is, a total of 960 bytes of data must be transferred to display characters on the whole screen. Simple transfer speed is about 24 msec as calculated by the following equation.

$$\frac{25.6\ \mu\text{sec} \times 2 \times 120 \times 4 = 2.4576 \times 10^4\ \mu\text{sec}}{\text{Time for transferring a single command}} = 24.576\ \text{msec}$$

Time required for transferring a line of data for display on the screen.

Actually, however, a longer timer than 24.576 msec is necessary for display data transfer because an additional time is required for switching the chips (of the 6 ICs μPD 7227s) and address designation by an LID (Load Immediate to Data Pointer) command.

3.5.7 Data Read

(1) This operation is performed only when making screen copies (pressing the CTRL key and COPY function key to output the displayed data to the printer to print out). In reading the displayed data out, select the read mode with an SRM command, set a read address into the data pointer with an LID command, and lower the C/$\overline{D}$ signal to low level (data mode). If an SCK signal is sent then, the data is serially read to the SO $\overline{BUSY}$ signal line.
The read data is routed via the keyboard and IC 4G (keyboard gate circuit) on the MOSU circuit board to data line 7. This serial data is converted into parallel data, which is then sent to the printer to be printed out.
The printer prints row by row so the same read operation must be repeated as many row lines as comprise a line of data. That is, data read must be repeated 960 times (120 columns x 8 rows) to print a line (20 characters).

(2) Data memories and display patterns

Data memory bit patterns correspond to display patterns as shown below.

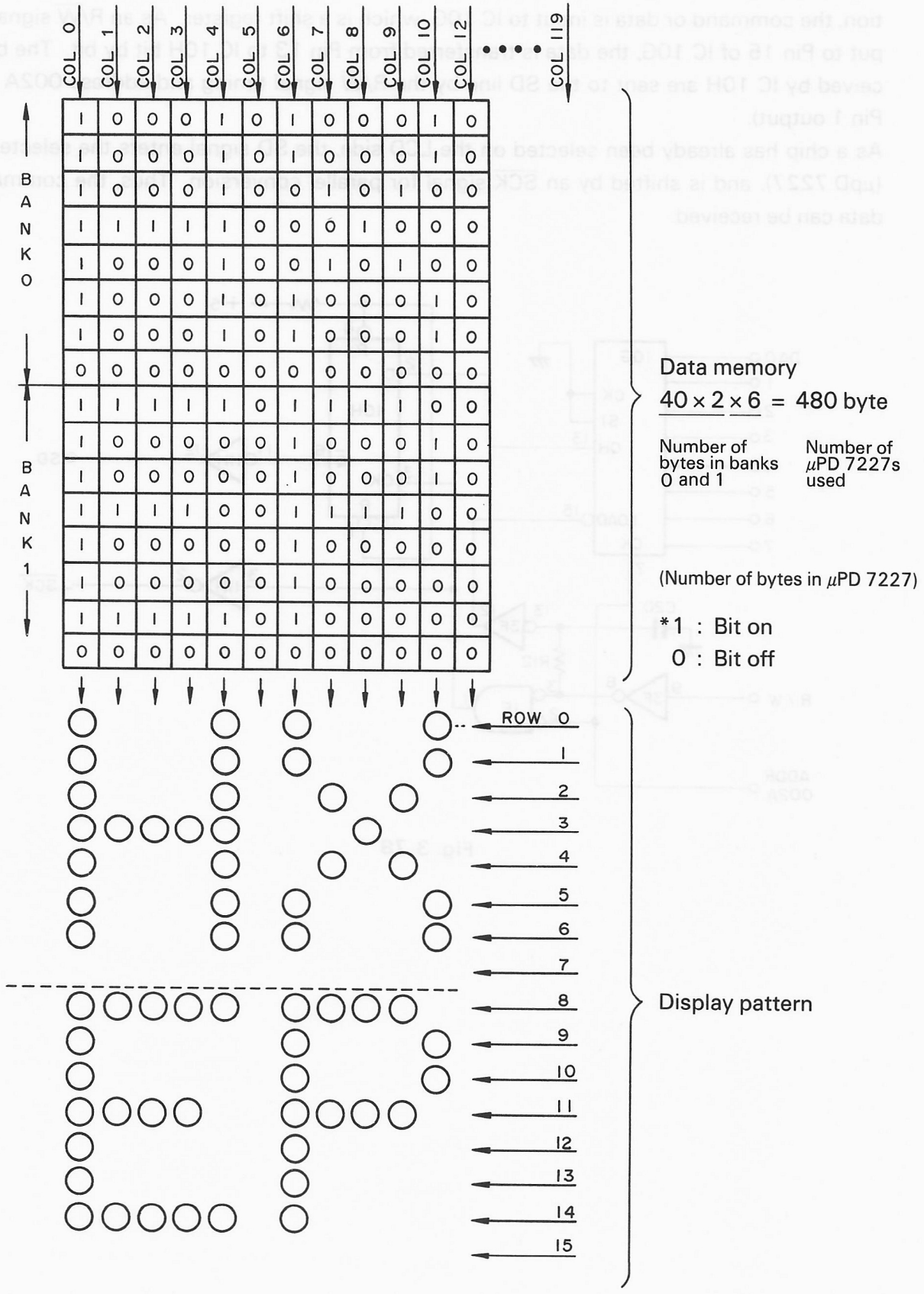

Fig. 3-77

3.5.8 Control Circuit

In transferring display data to the LCD, first address 0026 is output, and an appropriate data output is sent to DA 4 to DA 7 at this timing. Thus, the LCD's $\overline{CS}$ signal and C/$\overline{D}$ signal are input to IC 9G, where these signals are held. So an LCD $\overline{CS}$ (one of $\overline{CS0}$ to $\overline{CS5}$) signal can be input to the output end of IC 16G.

If address 002A is output and a transfer command or data to data bus lines under this condition, the command or data is input to IC 10G, which is a shift register. As an R/$\overline{W}$ signal is input to Pin 15 of IC 10G, the data is transferred from Pin 13 to IC 10H bit by bit. The bits received by IC 10H are sent to the SD line by the R/$\overline{W}$ signal timing and address 002A (IC 1F Pin 1 output).

As a chip has already been selected on the LCD side, the SD signal enters the selected chip (μpD 7227), and is shifted by an $\overline{SCK}$ signal for parallel conversion. Thus, the command or data can be received.

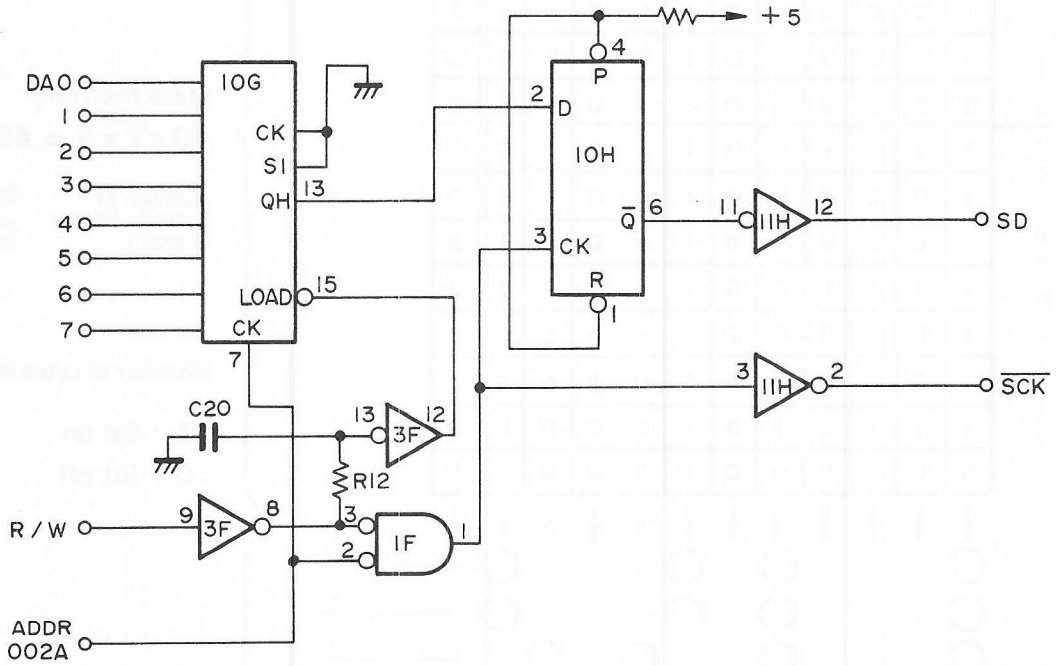

Fig. 3-78

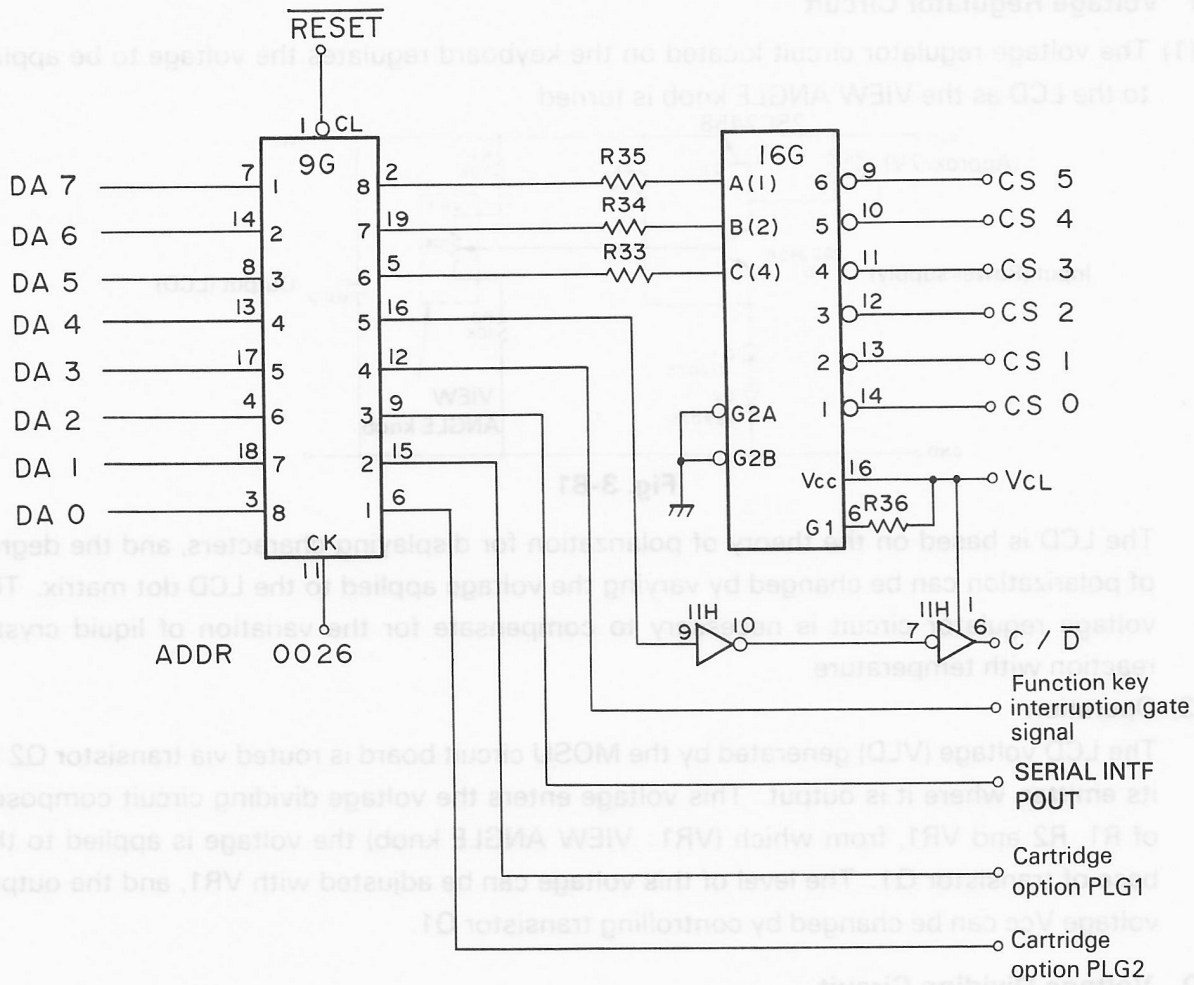

Fig. 3-79

	ADDRESS	DATA								HEX DATA
		7	6	5	4	3	2	1	0	
LCD CS 5	0026	X	X	X	X	X	○	○	X	06
LCD CS 4		X	X	X	X	X	○	X	○	05
LCD CS 3		X	X	X	X	X	○	X	X	04
LCD CS 2		X	X	X	X	X	X	○	○	03
LCD CS 1		X	X	X	X	X	X	○	X	02
LCD CS 0		X	X	X	X	X	X	X	○	01
LCD C/D		X	X	X	X	○	X	X	X	08
KEY INT MASK		X	X	X	○	X	X	X	X	10
P OUT		X	X	○	X	X	X	X	X	20
MO 1		X	○	X	X	X	X	X	X	40
MO 2		○	X	X	X	X	X	X	X	80

Fig. 3-80

3.5.9 Voltage Regulator Circuit

(1) The voltage regulator circuit located on the keyboard regulates the voltage to be applied to the LCD as the VIEW ANGLE knob is turned.

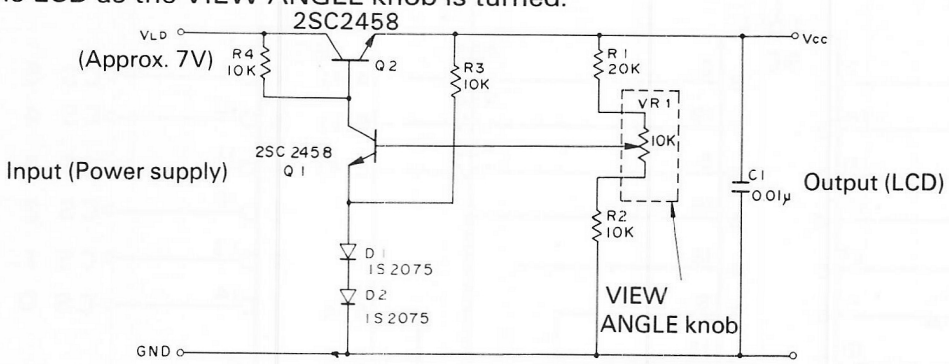

Fig. 3-81

The LCD is based on the theory of polarization for displaying characters, and the degree of polarization can be changed by varying the voltage applied to the LCD dot matrix. The voltage regulator circuit is necessary to compensate for the variation of liquid crystal reaction with temperature.

(2) Operation

The LCD voltage (VLD) generated by the MOSU circuit board is routed via transistor Q2 to its emitter, where it is output. This voltage enters the voltage dividing circuit composed of R1, R2 and VR1, from which (VR1: VIEW ANGLE knob) the voltage is applied to the base of transistor Q1. The level of this voltage can be adjusted with VR1, and the output voltage Vcc can be changed by controlling transistor Q1.

3.5.10 Voltage Dividing Circuit

Dot display on the LCD is controlled by voltage. That is, four voltages (V1, V2, V3, V4) are generated from the voltage Vcc that is supplied to the LCD unit. The LCD unit divides it by using resistors as shown below.

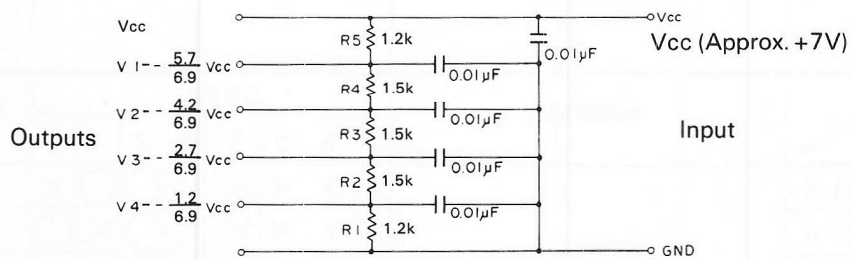

Fig. 3-82

The output voltages generated by the above circuit are as shown below.

LCD voltage

Vcc	100%	* 7V
V1	82.6%	5.78V
V2	60.8%	4.26V
V3	39.1%	2.74V
V4	17.4%	1.22V
VSG	GND	GND

* Vcc is variable.

3.5.11 Display Timing Example

The LCD outputs each column signal at the row line timing to change the reaction of the liquid crystals with its signal voltage, and displays characters in dots. An example of signal waveform and display dots is shown below.

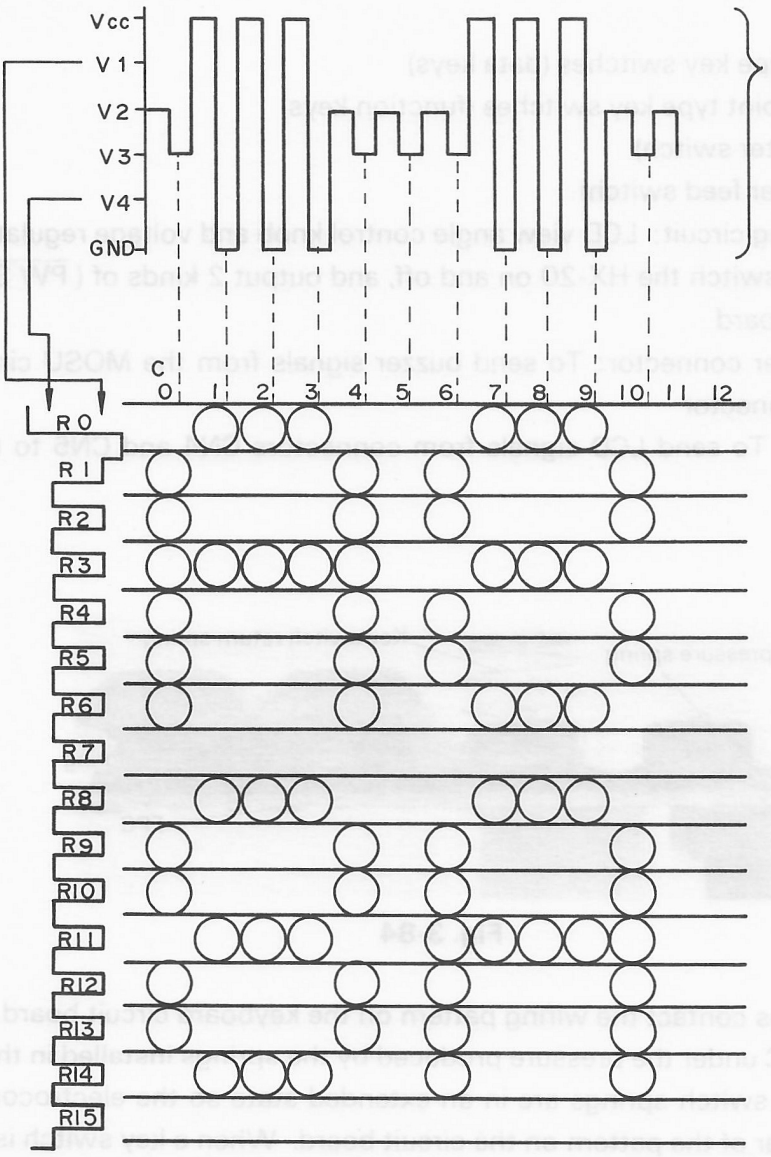

Fig. 3-83

3.6 Keyboard

The keyboard is connected to connectors 1 and 2 on the MOSU circuit board, outputs key data, and supplies signals to the piezo-electric buzzer and the LCD.

3.6.1 Hardware Composition

The keyboard unit consists of the following 5 components.

1. Key switches
   60 contact-point type key switches (data keys)
   8 rubber contact-point type key switches (function keys)
   1 slide switch (Printer switch)
   1 push switch (Paper feed switch)
2. View angle adjusting circuit: LCD view angle control knob and voltage regulator circuit
3. Power switch: To switch the HX-20 on and off, and output 2 kinds of ($\overline{\text{PW SW}}$) signal to the MOSU circuit board
4. Piezo-electric buzzer connector: To send buzzer signals from the MOSU circuit board to the buzzer via a connector
5. LDC signal circuit: To send LCD signals from connectors CN4 and CN5 to the KCN1 via the keyboard

3.6.2 Key Switches

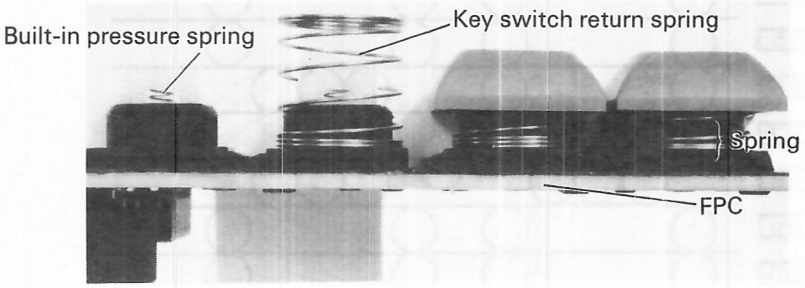

Fig. 3-84

The keyboard switches contact the wiring pattern on the keyboard circuit board with the wiring pattern on the FPC under the pressure produced by the springs installed in the switches. Normally, the built-in switch springs are in an extended state so the electroconductive pattern on the FPC is clear of the pattern on the circuit board. When a key switch is pressed, the spring is compressed to force the conductive parts of the FPC and circuit board into contact.

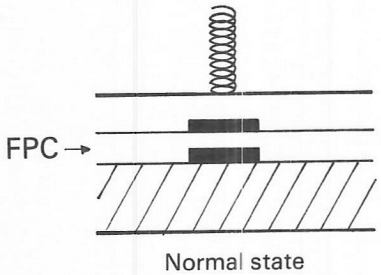

Normal state

Fig. 3-85

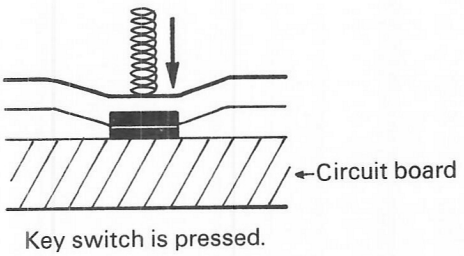

Key switch is pressed.

Fig. 3-86

3.6.3 Key Switch Signal Input

(1) The key switches comprise a 10 × 8 matrix, and when a key switch is pressed, a KSC signal line and a KRTN signal line contact with each other. Normally, the KRTN signal lines are pulled up by a +5V, but when a KRTN signal line contacts a KSC signal, it goes low so the output of IC 1G goes high. This high-level output is sent through the circuit shown below to turn an IRQ signal on in the main CPU. The depression of a key switch shorts the KRTN signal with a KSC line (normally low) and lowers the signal, and an interrupt request signal $\overline{\text{KB REQUEST}}$ is output to the main CPU via the OR circuit of IC 1G. Then, addresses 0022 and 0028 are output, and the keyboard data is read via IC 3G and IC 4G to the data bus lines.

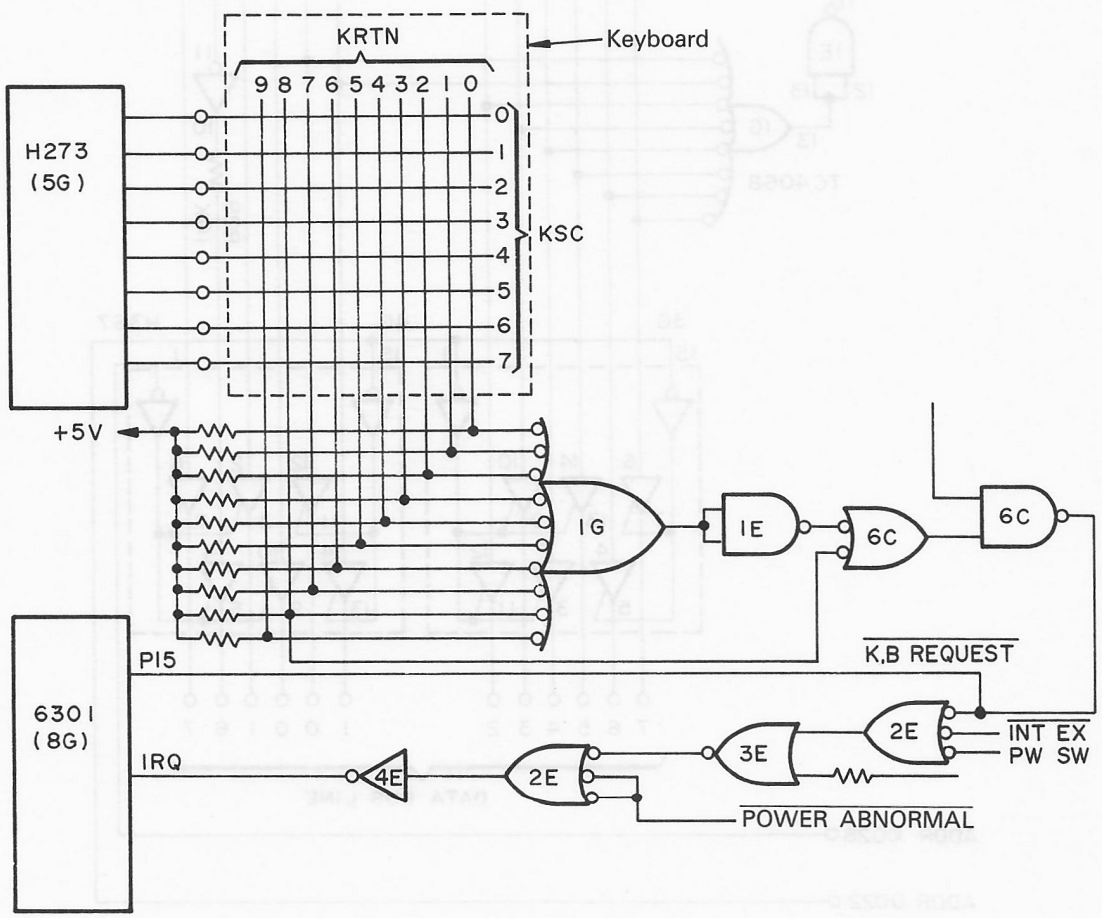

Fig. 3-87

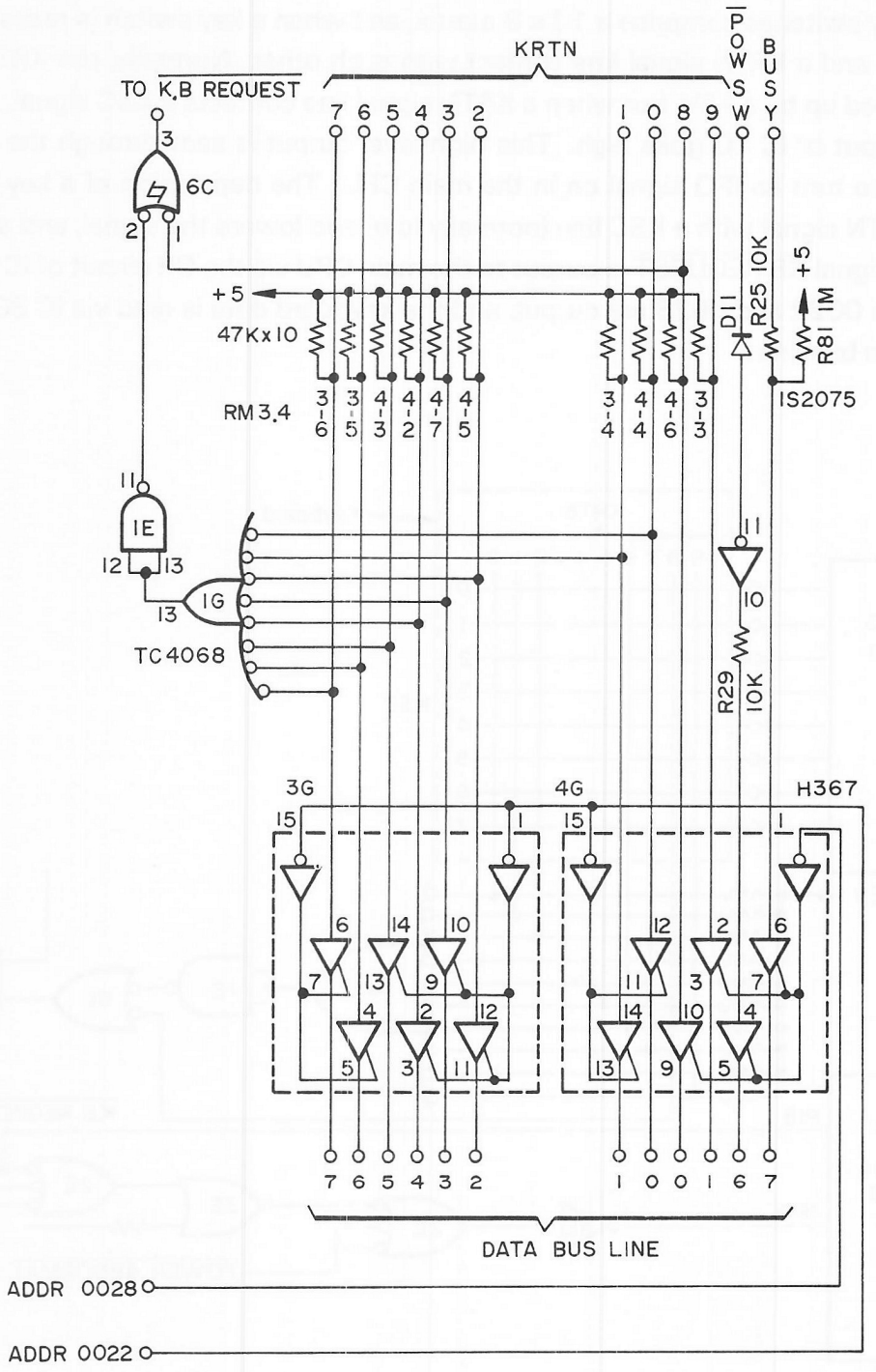
KRTN
TO K.B REQUEST
7 6 5 4 3 2
1 0 8 9
POWSW
BUSY
6C
+5
47Kx10
RM3.4
3-6
3-5
4-3
4-2
4-7
4-5
3-4
4-4
4-6
3-3
D11
R25 10K
+5
R81 1M
IS2075
1E
1G
TC4068
R29
10K
3G
4G
H367
DATA BUS LINE
ADDR 0028
ADDR 0022

Fig. 3-88

(2) When the main CPU receives the IRQ signal, it checks the ports and identifies it as $\overline{\text{KB REQUEST}}$. Then, it outputs a keyboard address, and KSC signal data to the data bus lines. IC 5G outputs one KSC signal after another. If a key is depressed, a KSC signal is output to the corresponding KRTN signal line so this signal is read to the data lines via IC 3G or IC 4G to identify the key switch depressed.

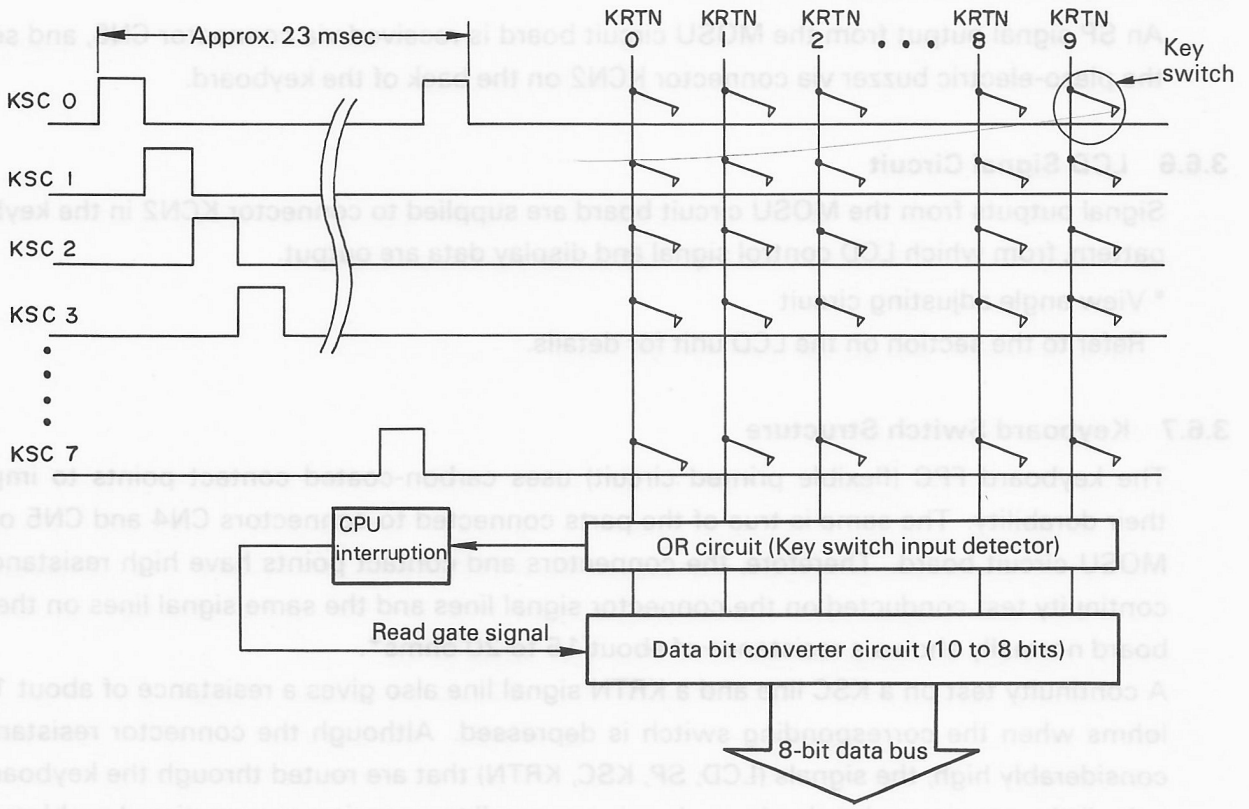

Fig. 3-89

(3) The function keys use rubber contact points instead of the FPC pattern. As the rubber contact point of a function key contacts the pattern on the circuit board, interruption processing takes place as when a data key is pressed, and the function key depressed is identified.

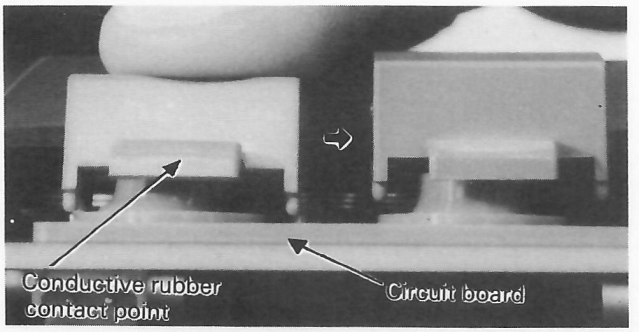

Fig. 3-90

3.6.4 Power Switch

The power switch is at floating level when it is off, and at low level when it is on. The power switch sends $\overline{\text{PW SW}}$ signals to connectors CN4 and CN5 on the MOSU circuit board; and a power on signal (V_L ON) and a battery voltage detector circuit signal ($\overline{\text{PW SW}}$).

3.6.5 Piezo-electric Buzzer Connector

An SP signal output from the MOSU circuit board is received via connector CN5, and sent to the piezo-electric buzzer via connector KCN2 on the back of the keyboard.

3.6.6 LCD Signal Circuit

Signal outputs from the MOSU circuit board are supplied to connector KCN2 in the keyboard pattern, from which LCD control signal and display data are output.

* View angle adjusting circuit

  Refer to the section on the LCD unit for details.

3.6.7 Keyboard Switch Structure

The keyboard FPC (flexible printed circuit) uses carbon-coated contact points to improve their durability. The same is true of the parts connected to connectors CN4 and CN5 on the MOSU circuit board. Therefore, the connectors and contact points have high resistance. A continuity test conducted on the connector signal lines and the same signal lines on the keyboard normally shows a resistance of about 15 to 20 ohms*.

A continuity test on a KSC line and a KRTN signal line also gives a resistance of about 15 kilohms when the corresponding switch is depressed. Although the connector resistance is considerably high, the signals (LCD, SP, KSC, KRTN) that are routed through the keyboard require little current so signal voltage drop is too small to present any operational problems.

* The resistance of the KRTN and KSC lines were measured by connecting a tester as follows:

Tester { Black lead to KSC
Red lead to KRTN

3.6.8 Key Switch Code

Each switch on the keyboard is read by KSC and KRTN signals, and has a code as shown below.

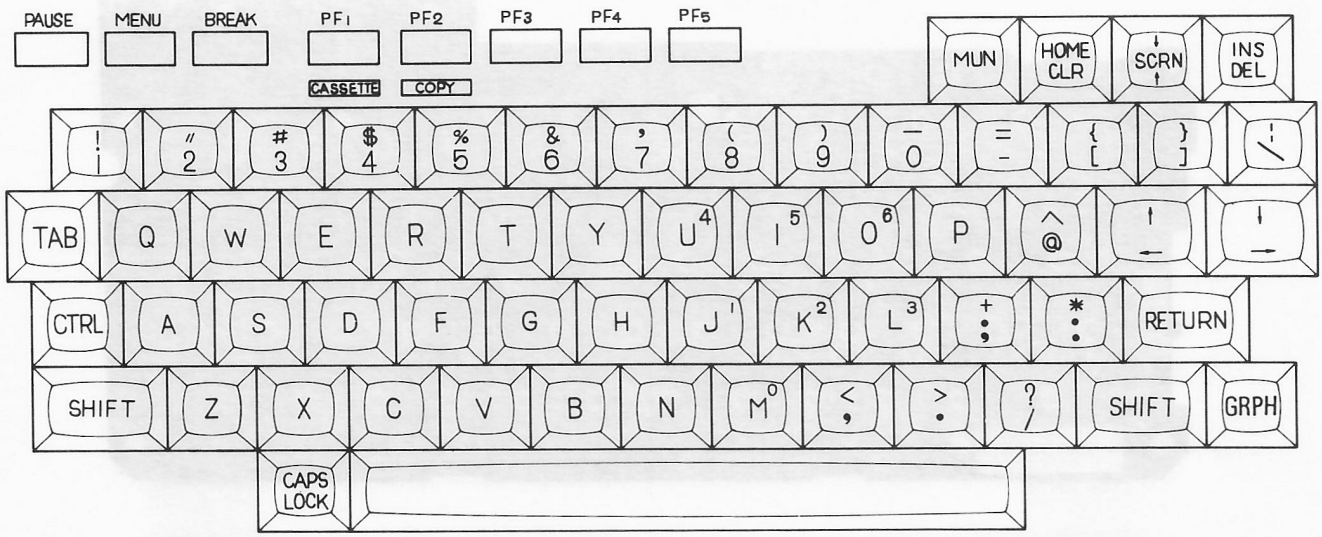

ASCII KEY BOARD

Fig. 3-91

* The data key switches are not independent of one another, but the right and left key switches are integrally built with the frame.

KSC \ KRTN	0	1	2	3	4	5	6	7	8	9
0	0	1	2	3	4	5	6	7	PF 1	SW6 1
1	8	9	:	;	,	—	.	/	PF 2	SW6 2
2	@	A	B	C	D	E	F	G	PF 3	SW6 3
3	H	I	J	K	L	M	N	O	PF 4	SW6 4
4	P	Q	R	S	T	U	V	W	PF 5	
5	X	Y	Z	[	]	\	←	→	PAPER FEED	SHIFT
6	RET	SP	TAB			NUM	GRPH	* CAPS LOCK		CTRL
7	CLR HOME	SCRN	SRAKE	PAUSE	INS DEL	MENU				PRTR ON/OFF

* CAPS LOCK = SHEET CLOCK

Fig. 3-92

3.6.9 Keyboard Connector Signals

The keyboard has FPC cables to connect to CN4 and CN5 on the MOSU circuit board and connectors to connect to the LCD and piezo-electric buzzer. See the table below for the connectors and signals.

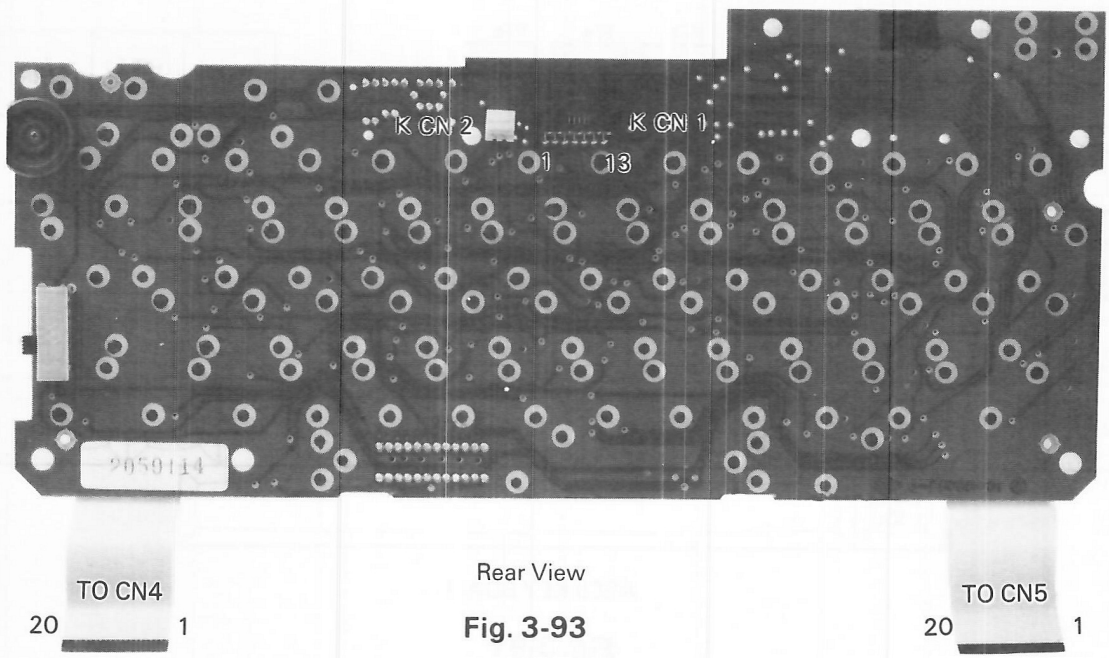

Fig. 3-93

CN4

Pin No.	20	19	18	17	16	15	14	13	12	11	10	9	8	7	6	5	4	3	2	1
Signal	$\overline{BUSY}$/SO	$\overline{PWSW}$	KRTN0	KRTN1	KRTN2	KRTN3	KRTN4	KRTN5	KRTN6	KRTN7	KRTN8	KRTN9	KSC7	KSC6	KSC5	KSC4	KSC3	KSC2	KSC1	KSC0
KCN1	12	—	—	—	—	—	—	—	—	—	—	—	—	—	—	—	—	—	—	—

CN5

Pin No.	20	19	18	17	16 15 14	13	12	11	10	9	8	7	6	5	4	3	2 1
Signal	SPG	SP	$\overline{PWSW}$	VLD	GND	$\overline{CS0}$	$\overline{CS1}$	$\overline{CS2}$	$\overline{CS3}$	$\overline{CS4}$	$\overline{CS5}$	SCK	SD	CLK	C/$\overline{D}$	RESET	VCL
KCN1	—	—	—	13	0	1	4	3	5	2	6	11	10	8	9	7	——

3.6.10 Keyboard Layout

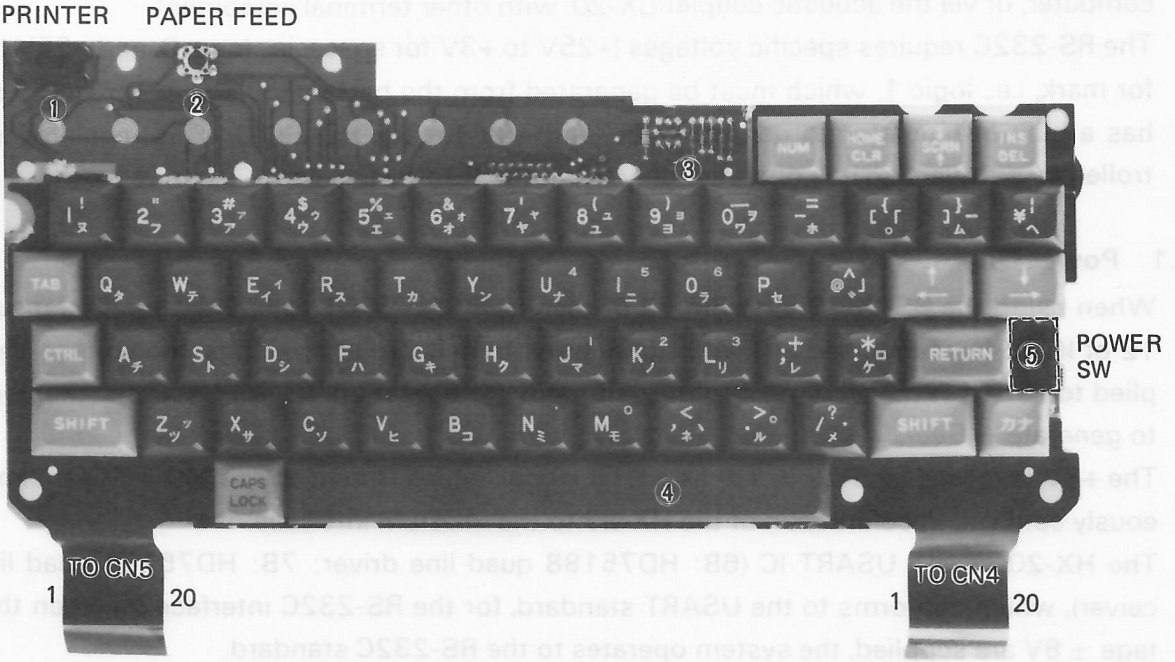

①

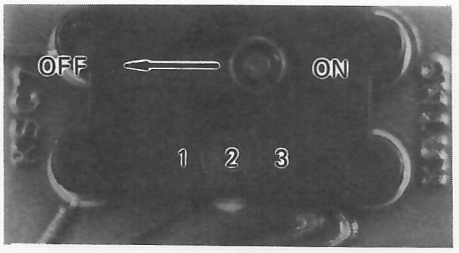

Pints 1 and 2 are electrically connected when the key is pushed in the arrow direction.
3: Unused

②

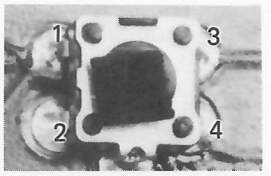

1 ↔ 3 : Shorted
2 : Unused
4 : If the N/O switch is pushed to Pin 1 or 3, Pins 1 or 3 and Pin 4 are electrically connected.

③

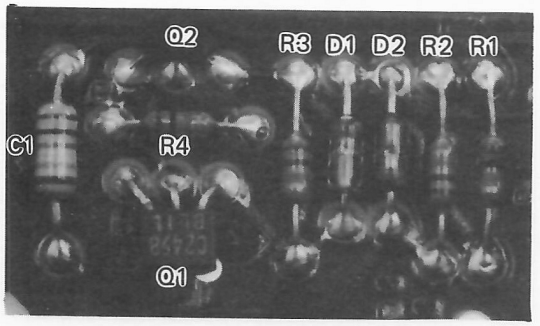

④

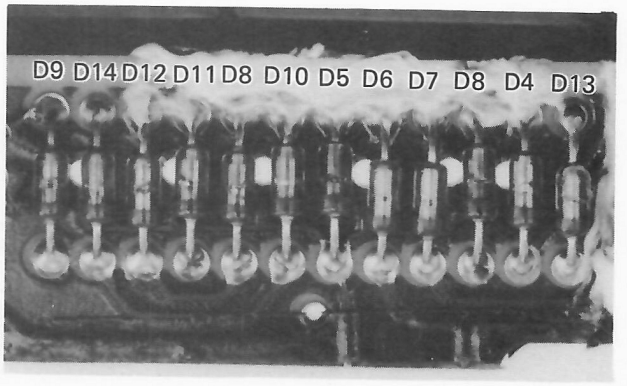

Resistance from CN4 to each KSC is 15 to 20 ohms.

⑤

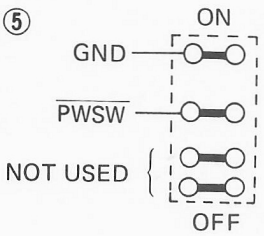

Resistance from CN4 to each power switch lead is approximately 15 ohms.

Fig. 3-94

3.7 RS-232C Interface

The HX-20 uses the RS-232C to send and receive data with a terminal printer and personal computer, or via the acoustic coupler CX-20, with other terminal equipment.

The RS-232C requires specific voltages (+25V to +3V for space, ie., logic 0, and −25V to −3V for mark, i.e., logic 1, which must be generated from the battery voltage of +5V. The HX-20 has a built-in regulator to generate +8V and −8V for the RS-232C. This regulator is controlled by software so it is operated only when the RS-232C is used.

3.7.1 Power On

When using the RS-232C, first Pin 36 of the slave CPU 6301 to high level. As a result, Pin 12 of IC 7E goes low, and an $\overline{SWL}$ signal turns transistor Q2 on. Thus, the voltage V_B is applied to Pin 14 (Vcc) of TL 497 to make it ready for operation. TL 497 starts switching Q11 to generate ± 8V.

The +8V is routed via R22 (5.1K) as a DTR signal, which is sent to the MODEM for simultaneously confirming connection of the HX-20 to the MODEM interface.

The HX-20 uses a USART IC (6B: HD75188 quad line driver; 7B: HD75189 quad line receiver), which conforms to the USART standard, for the RS-232C interface so when the voltage ± 8V are supplied, the system operates to the RS-232C standard.

* USART stands for Universal synchronous Asynchronous Receiver Transmitter.

3.7.2 Interface Circuit

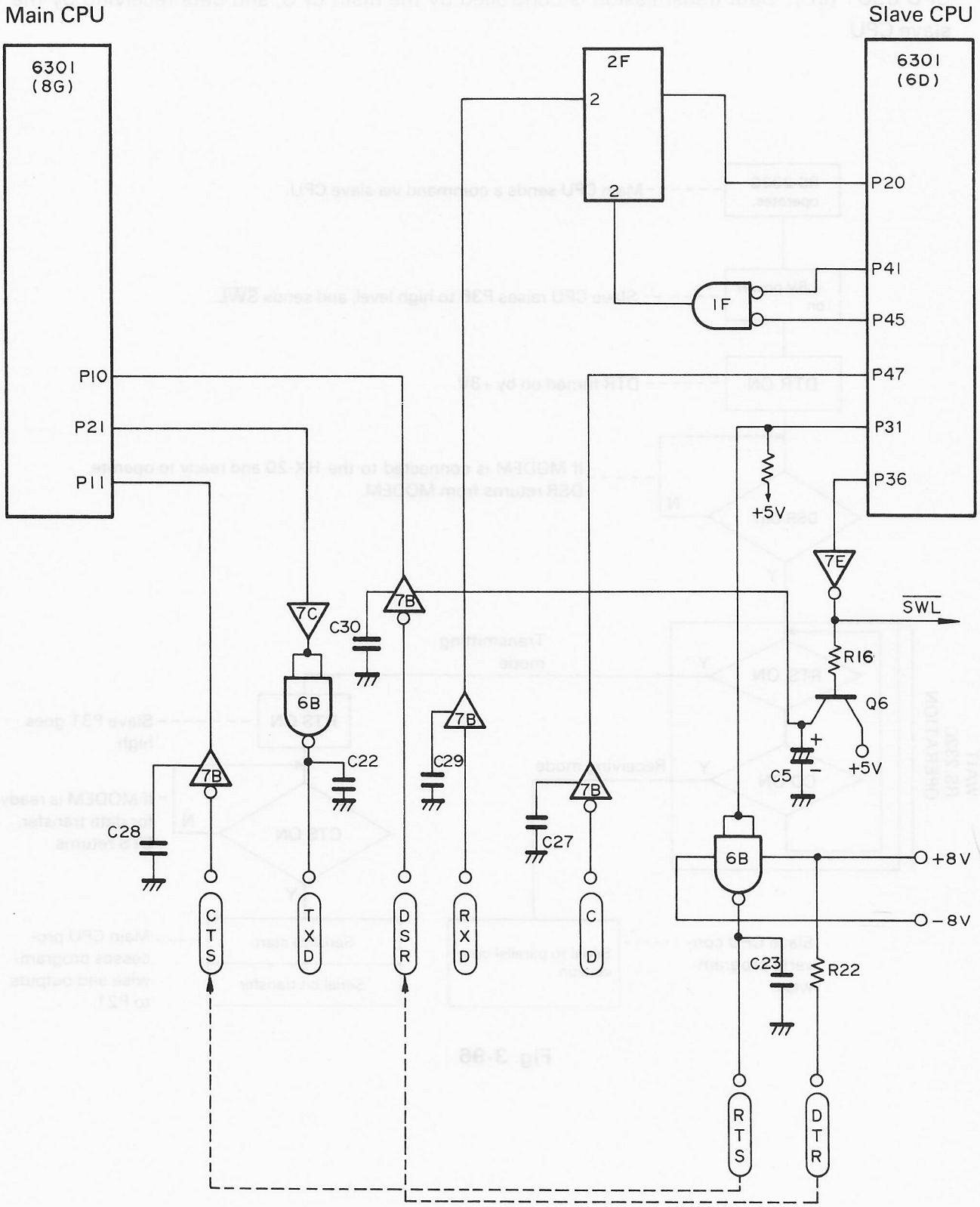

Fig. 3-95

3.7.3 Operation Sequence

The HX-20 controls the operation of the RS-232C with the main CPU 6301 (8G) and slave CPU 6301 (6D). Data transmission is controlled by the main CPU, and data receiving by the slave CPU.

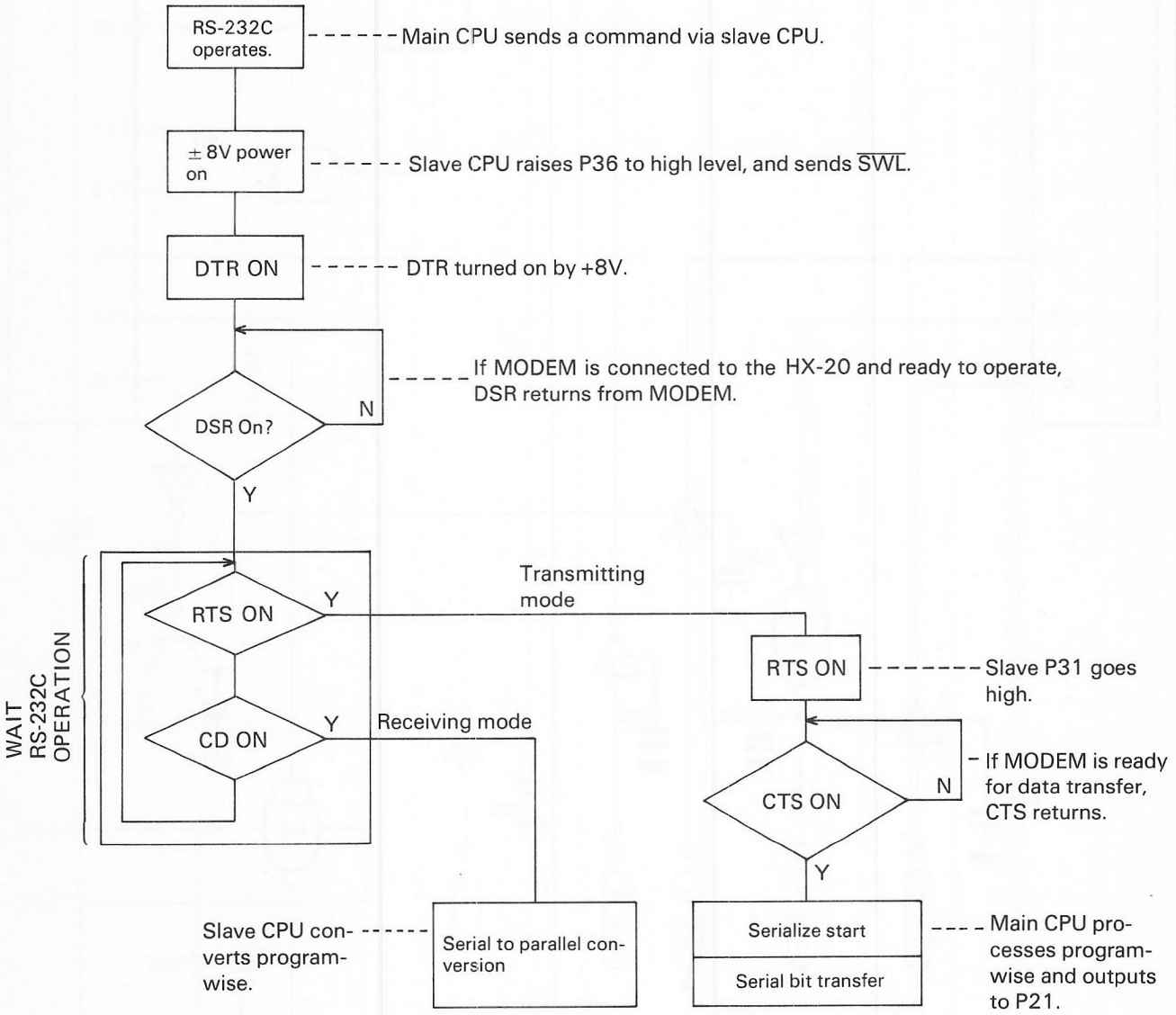

Fig. 3-96

3.7.4 RS-232C Operation Timing

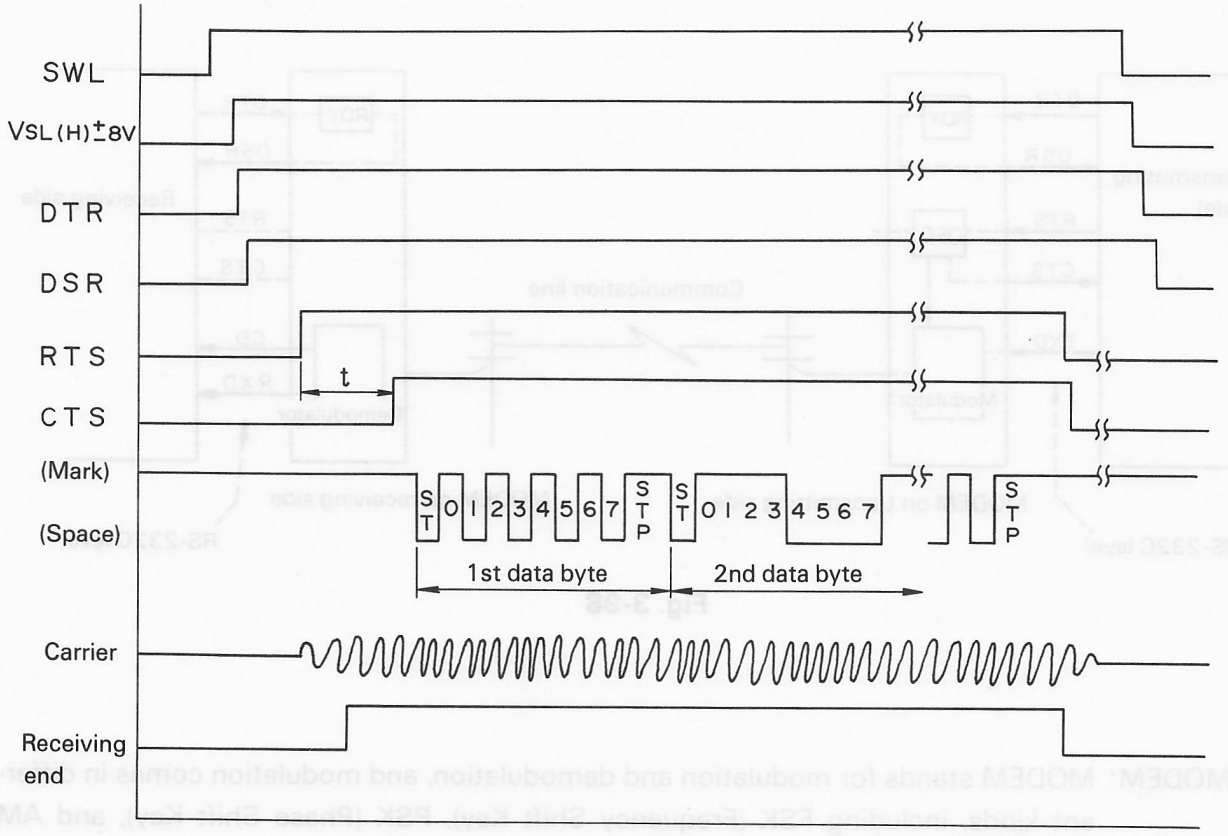

*t: Delayed time until MODEM is ready for data transfer.

Fig. 3-97

(1) Signal polarities

- Mark = Logic 1 (−3V to −25V): Stop bit
- Space = Logic 0 (+3V to +25V): Start bit

(2) Word length

- Start bit: 1 bit
- Data bit 7 or 8 bits
- Stop bit: 1 bit or longer

(3) Bit rate: 110 bps to 4800 bps

3.7.5 Operation Where MODEM (Coupler) Is Used

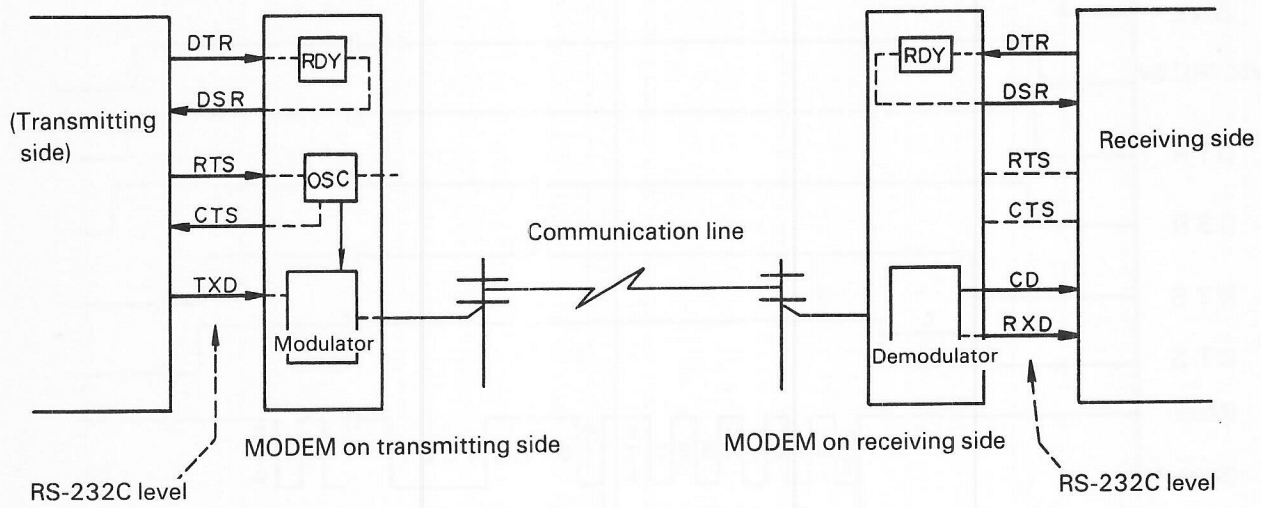

Fig. 3-98

MODEM: MODEM stands for modulation and demodulation, and modulation comes in different kinds, including FSK (Frequency Shift Key), PSK (Phase Shift Key), and AM (Amplitude Modulation).

Operation

A DTR is sent to check if the MODEM is ready to operate.
If it is, the MODEM outputs a DSR signal. If there is data to send after receiving the DSR, an RTS signal is sent to request the MODEM to send. When the MODEM receives the RTS signal, the carrier oscillator operates to output its output carrier to the transmitting data line.
A CTS signal is sent to the transmitting terminal after the oscillator output stabilizes. (The time required for the oscillator to stabilize in output level varies with the characteristics.)
When the MODEM on the receiving side detects the carrier from the receiving data line, it outputs a CD (Carrier Detect) signal, and makes the receiving terminal ready for receiving.
When the transmitting terminal receives the CTS signal, it converts the data to be transmitted from parallel to serial, and starts sending the data to the MODEM bit by bit. The MODEM modulates the data bits, and sends them to the transmitting data line.
The receiving terminal, which is made ready for receiving by the CD signal, demodulates the transmitted modulated data by the MODEM, and sends the digital data to the receiving terminal.

The timing chart shown below illustrates the above operation.

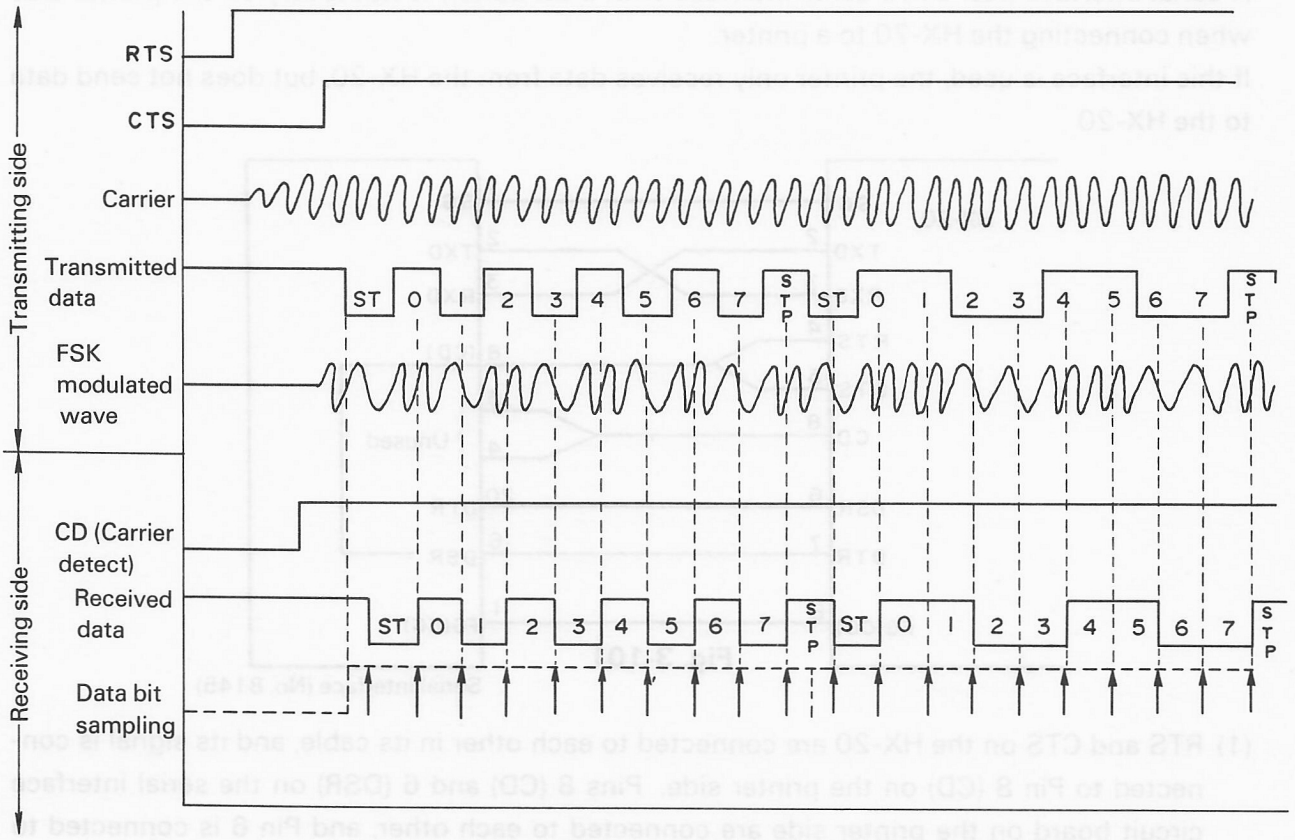

Fig. 3-99

3.7.6 Data Transfer Between HX-20s

In this case, HX-20s are directly connected to each other without MODEMs so, different from normal RS-232C operation, the signals generated by MODEMs are generated by cable connections.

(1) DSR and DTR lines are crossed to turn on the DSR of the opposite terminal with its own DTR signal.

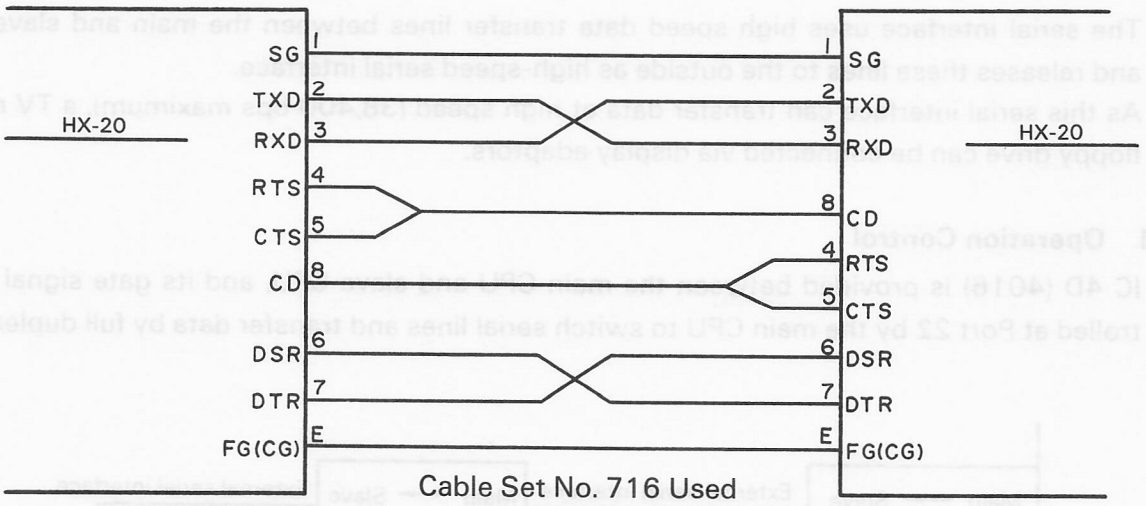

Cable Set No. 716 Used

Fig. 3-100

(2) Pins RTS and CTS are connected to each other so that, if an RTS is output, a CTS will be automatically detected.

This signal is sent to the opposite HX-20 through its CD line to make it ready for receiving.

3.7.7 Connecting Printer (EPSON Printer for HX-20)

A serial interface (No. 8145 serial interface with a 2K buffer) is necessary on the printer side when connecting the HX-20 to a printer.

If this interface is used, the printer only receives data from the HX-20, but does not send data to the HX-20.

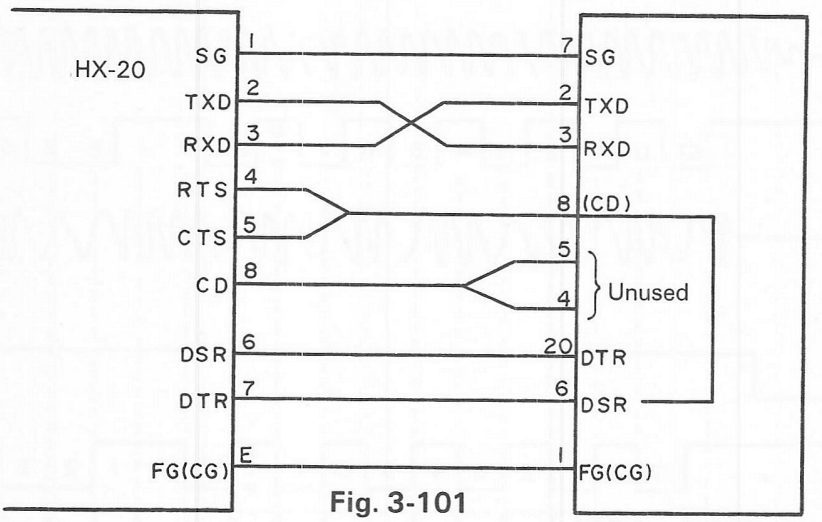

Fig. 3-101

(1) RTS and CTS on the HX-20 are connected to each other in its cable, and its signal is connected to Pin 8 (CD) on the printer side. Pins 8 (CD) and 6 (DSR) on the serial interface circuit board on the printer side are connected to each other, and Pin 6 is connected to Pin DTR on the HX-20.

Therefore, if the HX-20 outputs a DTR or RTS, the HX-20's RTS, CTS and DTR are turns on, and the printer's Cd and DSR are turned on.

(2) The DTR signal on the printer side indicates whether data can be transferred. (If it is at high level, data can be transferred.) This signal is connected to DSR on the HX-20. Therefore, the HX-20 transfers data to the printer while checking this DSR signal.

3.8 Serial Interface

The serial interface uses high-speed data transfer lines between the main and slave CPUs, and releases these lines to the outside as high-speed serial interface.

As this serial interface can transfer data at high speed (38,400 bps maximum), a TV monitor floppy drive can be connected via display adaptors.

3.8.1 Operation Control

IC 4D (4016) is provided between the main CPU and slave CPU, and its gate signal is controlled at Port 22 by the main CPU to switch serial lines and transfer data by full duplex.

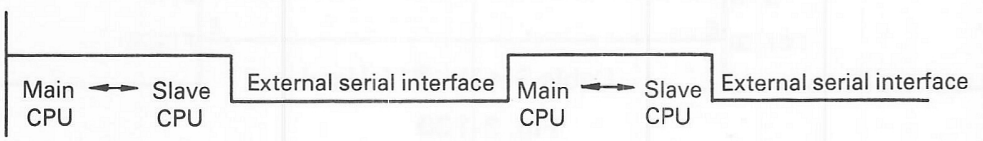

Fig. 3-102

3.8.2 Interface Operation

Where a serial interface is used, data is transferred without MODEMs, and MODEM control signals are necessary so that it is simpler than the RS-232C interface. When sending data, a P OUT signal is sent and then serial data is sent to the $\overline{\text{PTX}}$ signal line. When receiving data, a PIN signal is sent from the display adaptor prior to data transfer. After receiving the PIN signal, the $\overline{\text{PRX}}$ line data is received by the main CPU at Port 23. Simultaneous data transmission and reception can be made by full duplex operation through 4 signal lines.

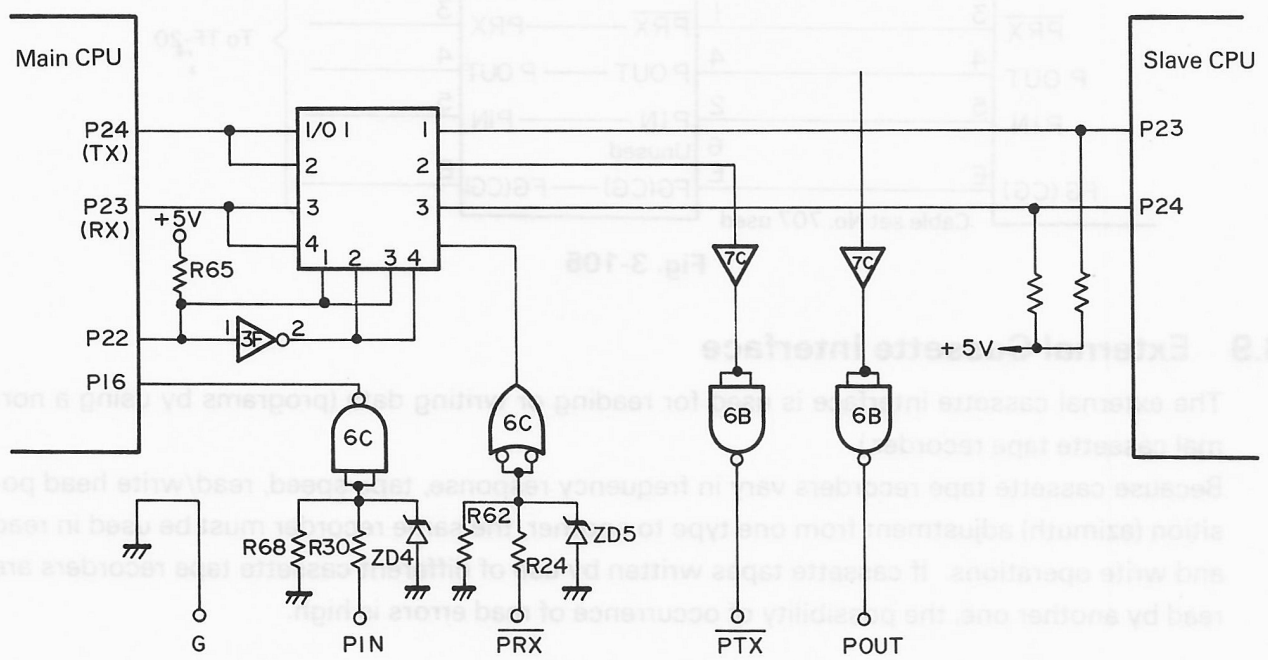

Fig. 3-103

Signal Level

In sending data to or receiving data from the outside, a signal level conforming to the RS-232C standard is used. In this case, voltage of $\pm$ 8V must be generated by the power supply before starting operation as in the case of the RS-232C.

3.8.3 Data Transfer Between HX-20s

Data can be transferred from one HX-20 to another or vice by using the cable set No. 717. Pins $\overline{\text{PTX}}$ and Pins $\overline{\text{PRX}}$s are connected to each other across; and so are Pins PINs and Pins P OUTs within the cables.

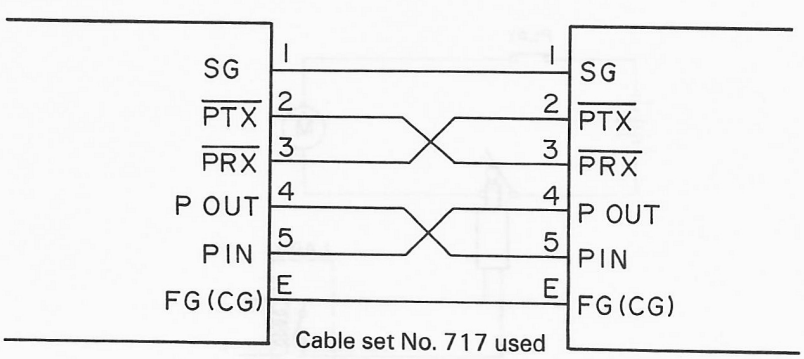

Fig. 3-104

3.8.4 Connecting Display Controller or Terminal Floppy

The cable set NO. 707 is used for daisy-chain connection.

This cable set uses 5-pin and 6-pin DIN connectors for preventing wrong engagement with the display controller. Pin 6 is unused.

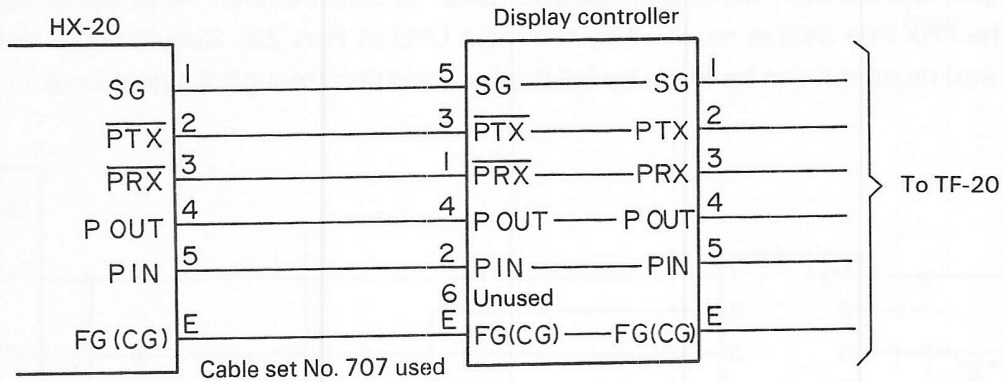

Fig. 3-105

3.9 External Cassette Interface

The external cassette interface is used for reading or writing data (programs by using a normal cassette tape recorder.)

Because cassette tape recorders vary in frequency response, tape speed, read/write head position (azimuth) adjustment from one type to another, the same recorder must be used in read and write operations. If cassette tapes written by use of different cassette tape recorders are read by another one, the possibility of occurrence of read errors is high.

3.9.1 Operation Control

All control operations are performed by the slave CPU, which is connected to a cassette tape recorder with cable set No. 702.

3.9.2 Motor Control Circuit

If the RMT cable is plugged into a cassette tape recorder and set into the play mode, the tape recorder motor can be controlled from the HX-20. When a LOAD or SAVE command is received, the slave CPU sets P30 to low level. As a result, the anode of diode D8 goes low, and relay LAD1 closes its contact points so that the motor circuit shown in the diagram below closes to start winding the cassette tape.

In an unused state, the IN signal line is pulled up by diode D10 to reject data. As P30 of the slave CPU goes low when the motor is turned on, the IN signal line becomes ready for operation.

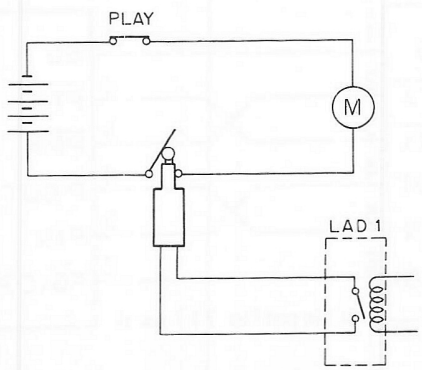

Fig. 3-106

3.9.3 External Cassette Connection

Use the special cable set No. 702 to connect the HX-20 to an external cassette tape recorder as shown below.

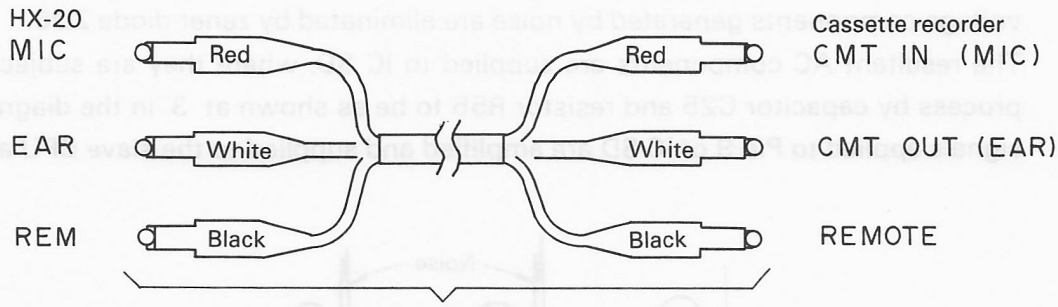

Fig. 3-107

Remote signals are for controlling the cassette tape recorder motor. When using the remote signal line for switching on and off the recorder motor from the HX-20, the play switch on the cassette tape recorder must be in the on position.

Note:

Do not plug the remote cable into the connector when manually controlling the cassette tape recorder without using remote signals.

3.9.4 Read/Write Signals

The read/write waveform has a period of 1 kHz when on and a period of 2 kHz when off.

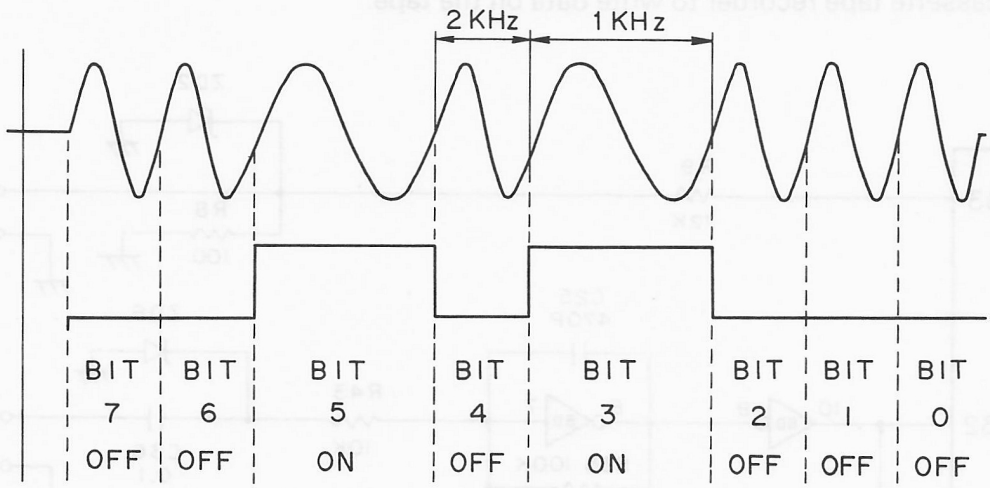

Fig. 3-108

3.9.5 Data Read

Output signals from the cassette tape recorder are routed through capacitor C1 to remove their DC components and take out only the AC components. Simultaneously, the high-voltage components generated by noise are eliminated by zener diode ZD6.

The resultant AC components are supplied to IC 8D, where they are subject to a threshold process by capacitor C25 and resistor R55 to be as shown at 3 in the diagram at right. The signals applied to Pin 9 of IC 8D are amplified and supplied to the slave CPU as pulse signals.

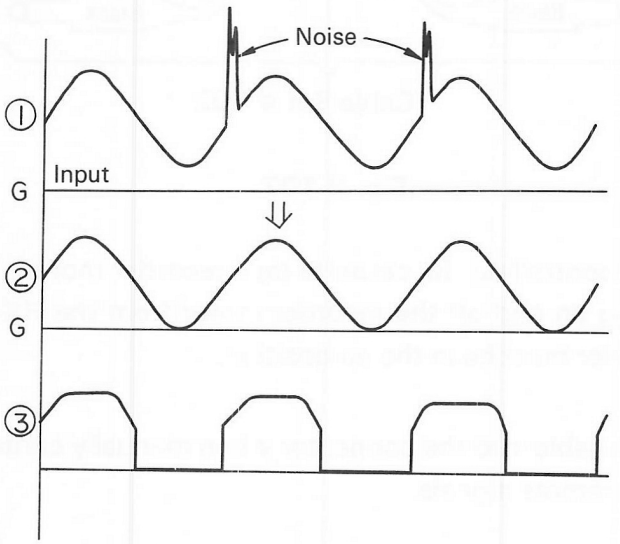

Fig. 3-109

3.9.6 Data Write

When a pulse signal is sent from Pin 33 of the slave CPU, it is routed through the R/W circuit of the cassette tape recorder to write data on the tape.

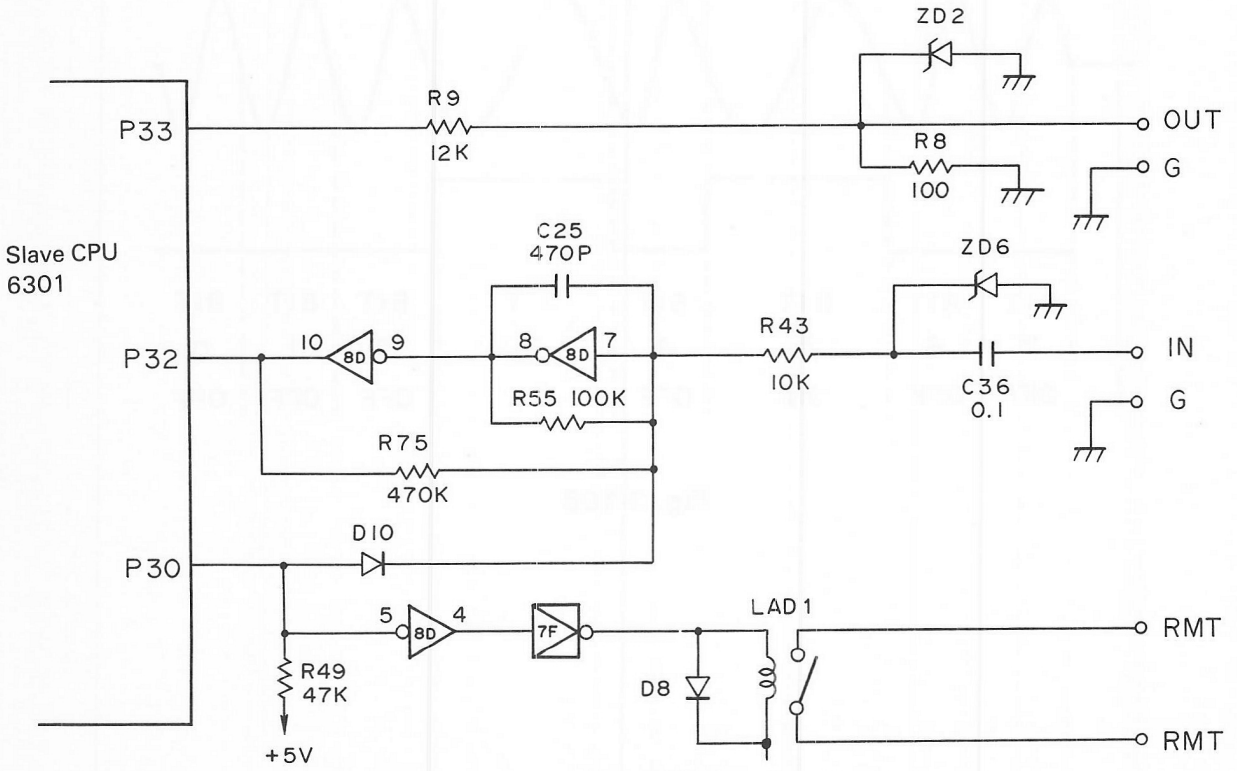

Fig. 3-110

CHAPTER 4
OPTIONS

4.1 Microcassette 4- 1
4.1.1 Hardware Composition 4- 1
4.1.2 Interface with HX-20 ..... 4- 3
4.1.3 Power Supply 4- 5
4.1.4 Capstan Motor Drive Circuit 4- 6
4.1.5 Head Pinch Motor Drive Circuit 4- 7
4.1.6 Microcassette Commands 4- 8
4.1.7 Command Sequence 4- 9
4.1.8 Motor Speed Control 4-10
4.1.9 Read/Write Circuit 4-12
4.1.10 Selector Circuit 4-14
4.2 ROM Cartridge 4-15
4.2.1 Theory of Operation 4-15
4.2.2 ROM Format 4-17
4.2.3 Hardware Composition 4-18
4.2.4 Interface 4-19
4.2.5 Power Supply 4-20
4.2.6 Address Counter 4-22
4.2.7 Shift Register 4-22
4.2.8 ROM Jumpers 4-23
4.2.9 Distinction ROM Cartridge from Microcassette 4-24
4.3 Expansion Unit 4-25
4.3.1 Hardware Composition 4-25
4.3.2 ROM/RAM Select Circuits 4-27
4.3.3 Bank Switching 4-30
4.3.4 Interface 4-33
4.3.5 Jumper (J1/J2) and DIP Switch (SW1/2) Setting 4-34
4.4 Display Controller 4-36
4.4.1 Display Modes 4-37
4.4.2 Text Mode 4-39
4.4.3 Graphic Mode 4-40
4.4.4 Operation Mode (Memory Map) 4-41
4.4.5 Power Supply 4-43
4.4.6 Oscillation Circuit 4-45
4.4.7 Reset Circuit 4-45
4.4.8 Interface 4-46
4.4.9 RAM Control 4-47
4.4.10 Data Bus Control 4-49
4.4.11 Character Generators 4-51
4.4.12 Address Latch 4-52
4.4.13 Modulator Circuit 4-53

4.1 Microcassette

The microcassette is controlled by the main and slave CPUs. Its operation is controlled by storing the commands sent from the slave CPU as serial data into an instruction register. A counter circuit employing a photo-reflector is provided so it is possible to feed the tape fast to the required area by using this counter.

4.1.1 Hardware Composition

The microcassette consists of a power supply, motor drive circuit block, read/write control block, and motor speed control block, etc. and is designed to turn power on only when it is used.

The tape is fed at a speed of 2.4 cm/sec by a 2400 rpm capstan motor. Data is read or written at about 1300 BPS, and about 50 KB of data can be input to a 30-minute cassette.

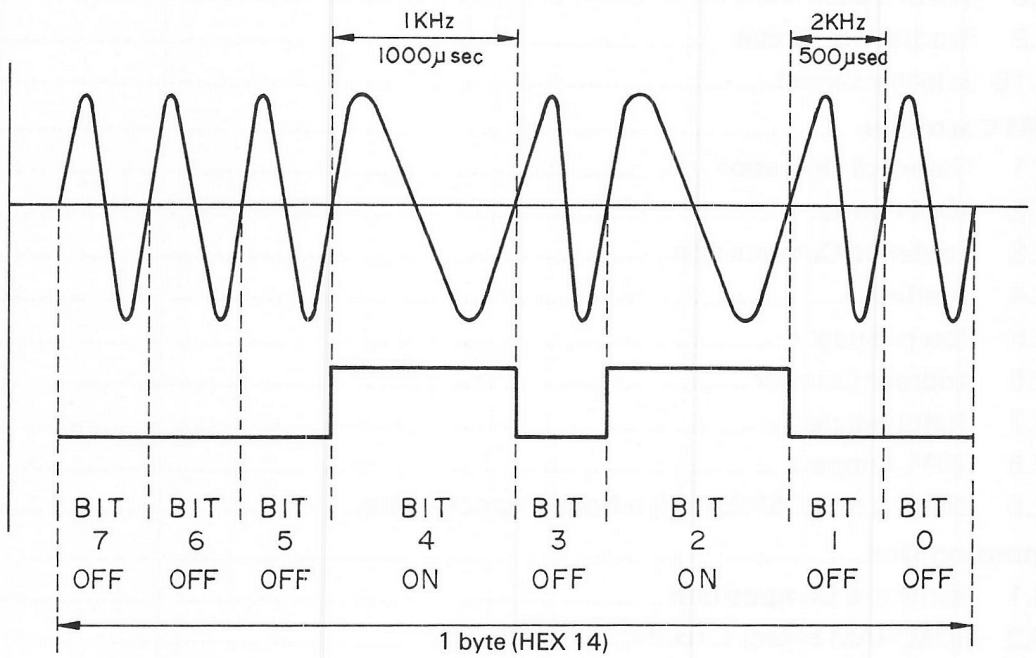

Fig. 4-1

Data is written onto a tape by FSK (frequency modulation) for a period of 2 kHz at bit 0 (off) or of 1 kHz at bit 1 (on).

● Hardware Block Diagram

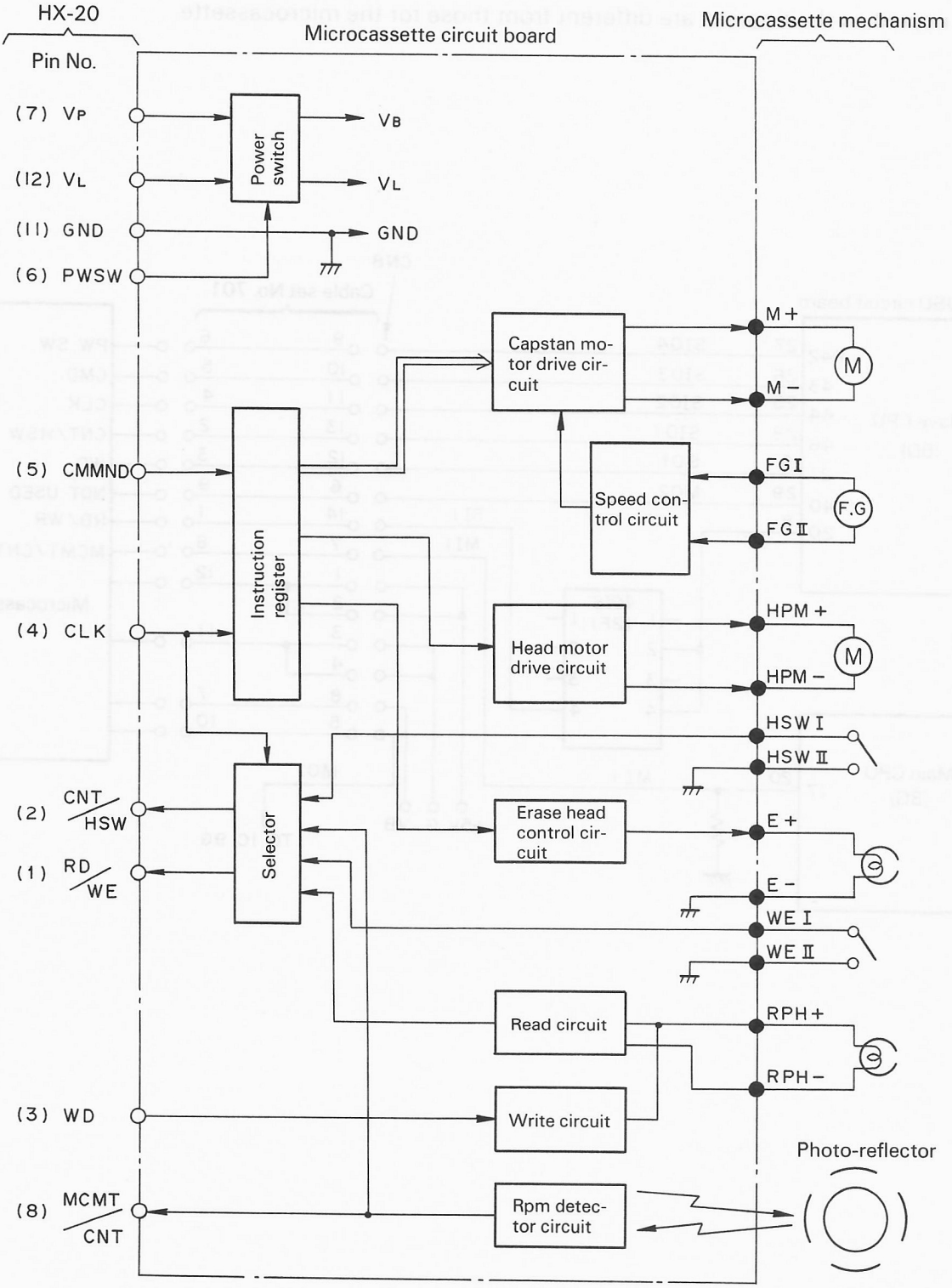

Fig. 4-2

4.1.2 Interface with HX-20

(1) The microcassette is connected to the MOSU circuit board with the cable set No. 701. The interface signals for the MOSU circuit board apply where the ROM cartridge is connected so their names are different from those for the microcassette.

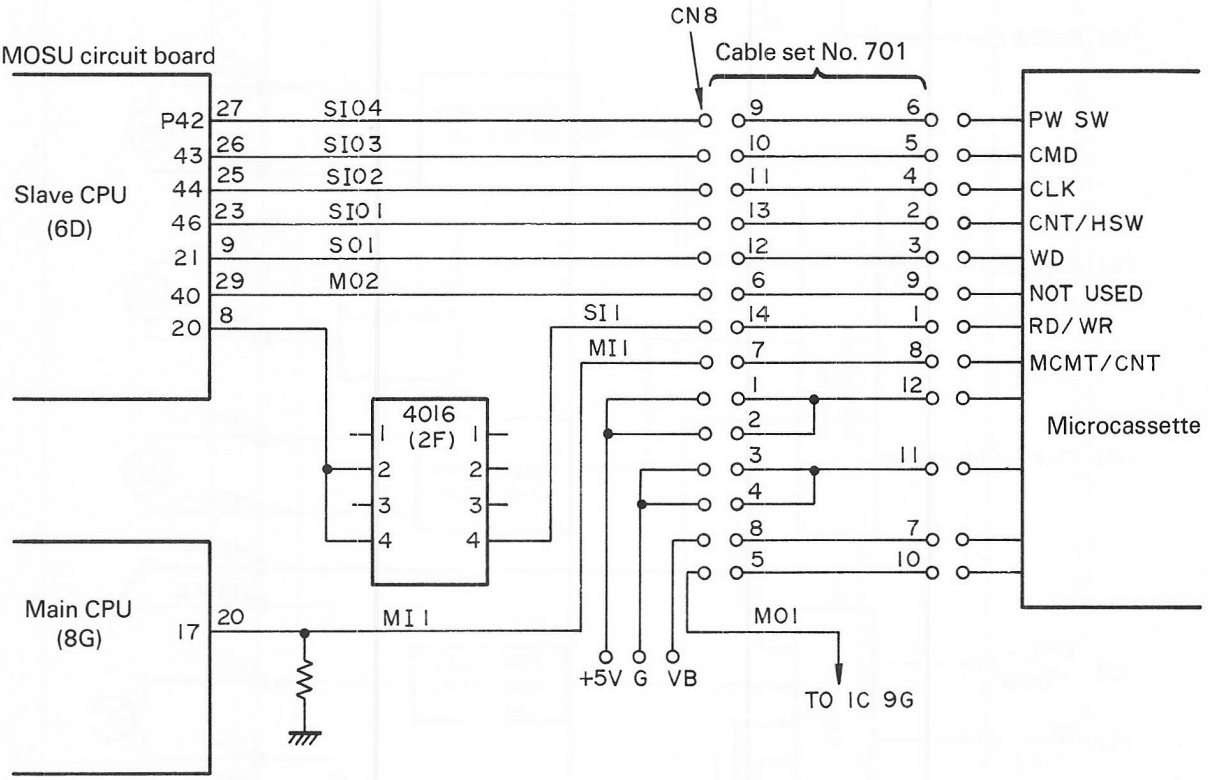

Fig. 4-3

(2) Interface signals

Pin No.	Signal direction I/O	Signal name			Description
		Special Name	Common Name	Port	
1 (14)	In	RD/WE	Si1	Slave Port 2 Bit 0	Selected depending on CLK (Pin No. 4) value. CLK = 0 : RD Microcassette read data CLK = 1 : WE Accidental erasure prevention signal WE = 0 (prevention of writing to)
2 (13)	In	CNT/HSW	Sio1	Slave Port 4 Bit 6	Selected depending on LCK (Pin No. 4) value. CLK = 0 : CNT rpm detect signal CLK = 1 : HSW Head switch HSW=0 (Head off)
3 (12)	Out	WD	So 1	Slave Port2 Bit 1	Microcassette write data
4 (11)	Out	CLK	Sio 2	Slave Port4 Bit 1	Command set clock and RD/WE, CNT/HSW select signal
5 (10)	Out	CMMND	Sio 3	Slave Port 4 Bit 3	Command serial data output
6 (9)	Out	PWSW	Sio 4	Slave Port 4 Bit 2	Power on-off switch
7 (8)	–	VB			+5V (Microcassette mechanism drive voltage)
8 (7)	In	MCMT/ CNT	Mi 1	Main Port 1 Bit	Power off: Microcassette in or out = 1 (in) = 0 (out) Power on: Rpm detect signal is input.
9 (6)	Out		Mo 2	Main Address 26 Bit 7	Unused
10 (5)	Out		Mo1	Main Address 26 Bit 6	Unused
11 (4.3)		GND			Ground
12 (2.1)		V_L			+5V (for write/read circuit, selector instruction register)

Figures in parentheses indicate pin numbers of CN8 on the MOSU circuit board.

Fig. 4-4

4.1.3 Power Supply

The power supply consists of a circuit which constantly supplies the voltage by V_L and a motor circuit which supplies the voltage VB only when the microcassette is in use. V_L is always supplied to instruction register (IC2) and selector (IC3) to permit reception of commands and status check of the HSW and WE switches at any time. When a power on signal (PW SW) goes high, transistor Q8 in the motor drive circuit is turned on so the base of transistor Q2 goes low, and the voltage VB is supplied to the collector of Q2. Transistor Q1 is turned on simultaneously so the voltage VB is supplied to the collector of Q1 to supply it to the LED lamp for the microcassette.

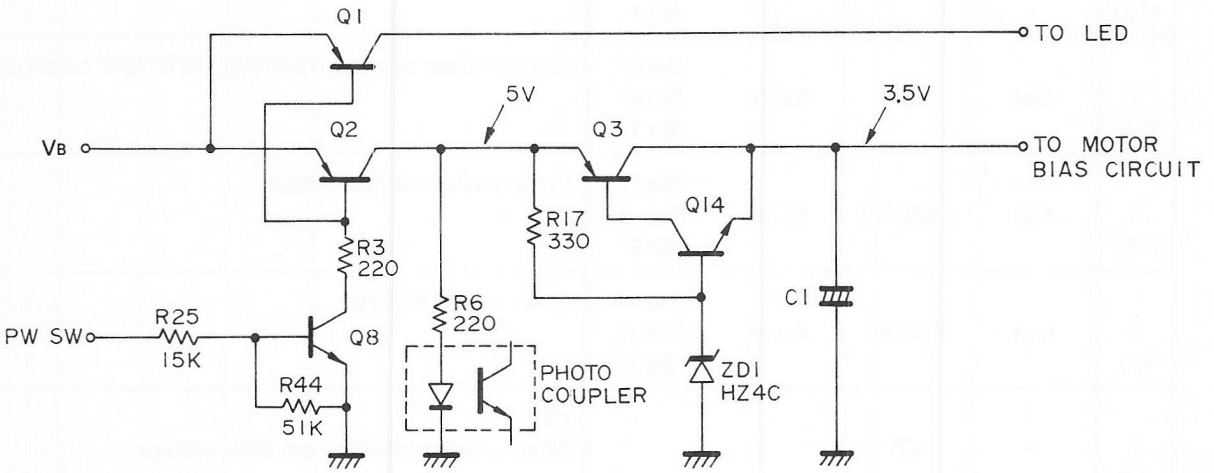

Fig. 4-5

A motor drive voltage of +3V is generated by stepping down the voltage VB (about 5V) to about 3.5V by means of transistors Q3 and Q14 and zener diode ZD1 (4V). The 3.5V is output to the collector of transistor Q3. In the circuit that generate the motor voltage from VB, first the output voltage of Q2 is applied to ZD1 via R7. If the applied voltage is higher than 4V, ZD1 occurs zener breakdown so a current flows via R7. As a result, the base of Q14 goes low to turn off the transistor; and the collector output of transistor Q3 is also turned off. As the zener yield of ZD1 causes a large current to flow via R7, the voltage drop across R7 lower the cathode voltage of ZD1 to 4V or less. Thus, the zener yield stops and transistors Q14 and Q3 are turned on again to supply a voltage to the collector of Q3. This process is repeated to generate a voltage of +4V minus the internal voltage drop in the transistors, that is, about 3.5V.

4.1.4 Capstan Motor Drive Circuit

Motor condition is controlled by commands in the instruction register. There are 5 modes as follows:

1) Stop
2) Play/Rec (Read or write)
3) REW (Rewind)
4) FF (Fast Feed)
5) Brake

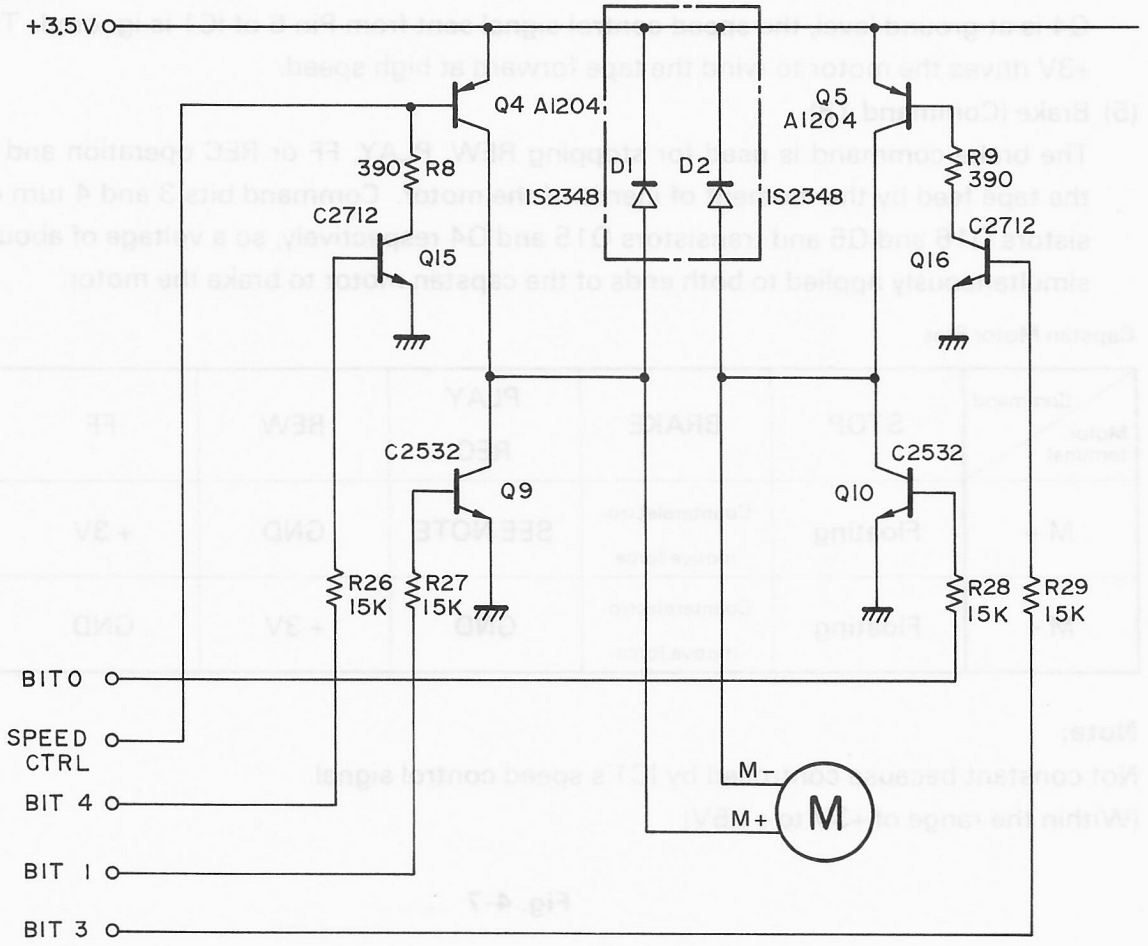

Fig. 4-6

(1) Stop (Command 00)

In this mode, no voltage is applied to the motor because voltage supply to the motor circuit is stopped (the PW SW signal goes low).

(2) Play (Read)/Rec (Write) (Play command 01, Rec command 81)

In the read or write mode, transistor Q10 is first turned on by command bit 0, and the motor M- (negative) goes to the ground level. At operation start, Pin 6 output from IC1 (TD6303F) is at low level so transistor Q4 is on and a voltage of about 3V is applied to the motor M+. Therefore, the motor starts running, and the timing generator that is attached to the motor generates a feedback pulse. This feedback pulse is checked for period by IC1, and is controlled to be 400 Hz by the Pin 6 output (motor bias control).

(3) REW (Rewind) (Command OA)

In the rewind mode, command bit 1 turns on transistor Q19 which is connected to the outside of Pin 9 of IC1. This puts IC1 into the standby mode (i.e., non-operating status), turns on transistor Q9 in the motor drive circuit, and sets the motor M+ to the ground level. Command bit 3 also turns on transistors Q16 and Q5 to apply a voltage of about 3V to the M– end of the motor. Thus, the voltage of about 3V drives the motor in the reverse direction at high speed to rewind the tape without speed control.

(4) FF (Fast Feed) (Command 11)

This mode is used for winding the tape to the desired position indicated by the tape counter (which counts with the microcassette photo-reflector). When an FF command is received, command bit 0 turns on transistor Q10 to set the motor M– to the ground level, and bit 4 turns on transistors Q15 and Q4 to apply a voltage of about +3V to the M+ end of the motor. In this case, IC1 for speed control operates, but since the base of transistor Q4 is at ground level, the speed control signal sent from Pin 6 of IC1 is ignored. Thus, the +3V drives the motor to wind the tape forward at high speed.

(5) Brake (Command 18)

The brake command is used for stopping REW, PLAY, FF or REC operation and braking the tape feed by the moment of inertia of the motor. Command bits 3 and 4 turn on transistors Q16 and Q5 and transistors Q15 and Q4 respectively, so a voltage of about +3V is simultaneously applied to both ends of the capstan motor to brake the motor.

Capstan Motor Bias

Command / Motor terminal	STOP	BRAKE	PLAY REC	REW	FF
M +	Floating	Counterelectro-motive force	SEE NOTE	GND	+ 3V
M –	Floating	Counterelectro-motive force	GND	+ 3V	GND

Note:
Not constant because controlled by IC1's speed control signal.
(Within the range of +3V to +1.5V)

Fig. 4-7

4.1.5 Head Pinch Motor Drive Circuit

The head pinch motor loads or unloads the read/write head on or from the tape. In read or write operation only, the head is loaded. In read or write operation only, the head is loaded. In all other cases, the head is unloaded.

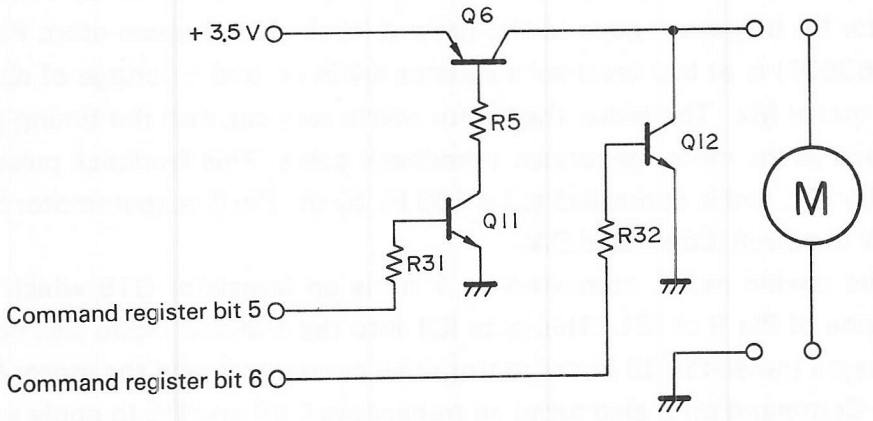

Fig. 4-8

4.1.6 Microcassette Commands

Command	Code (HEX)	Code Bit 7	6	5	4	3	2	1	0	Function
STOP	00									Operation stop
REW	0A					○		○		Rewind
PLAY	01								○	Data stop
FF	11				○				○	FF
REC	81	○							○	Data read
BRAKE	18				○	○				Capstan motor brake
HLD	20			○						Head motor (Head load/unload)
H BRAKE	40		○							Head motor brake

Fig. 4-9

Commands are sent as serial data from the slave CPU to the instruction register when no power is supplied to the motor circuit. The command bits input to the instruction register correspond to the transistors in the motor drive circuit so the command bits directly control the motor drive circuit.

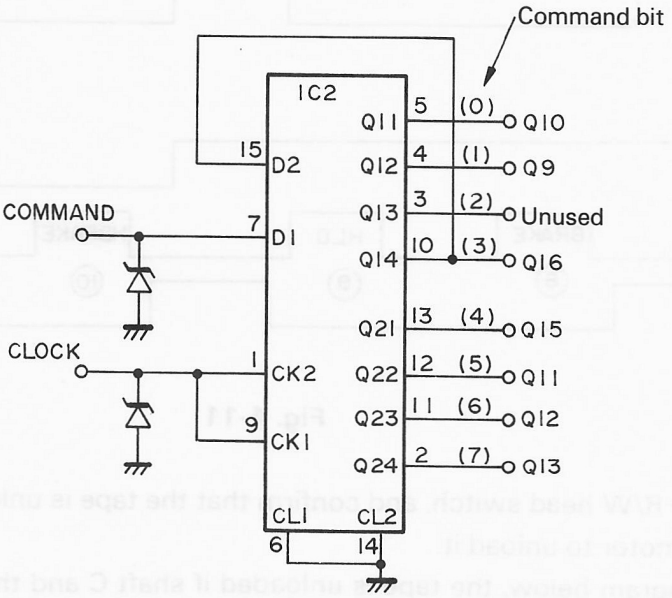

Fig. 4-10

4.1.7 Command Sequence

In switching one command over to another, be sure to stop power supply to the motor drive circuit, input the new command into the instruction register, and then supply power again to execute the required operation. Upon completion of a series of operations, send the stop command 00 to the instruction register at the end to clear the register. After fast feeding the tape with the aid of the counter, reading data from a specific file, and stopping operation is as described below.

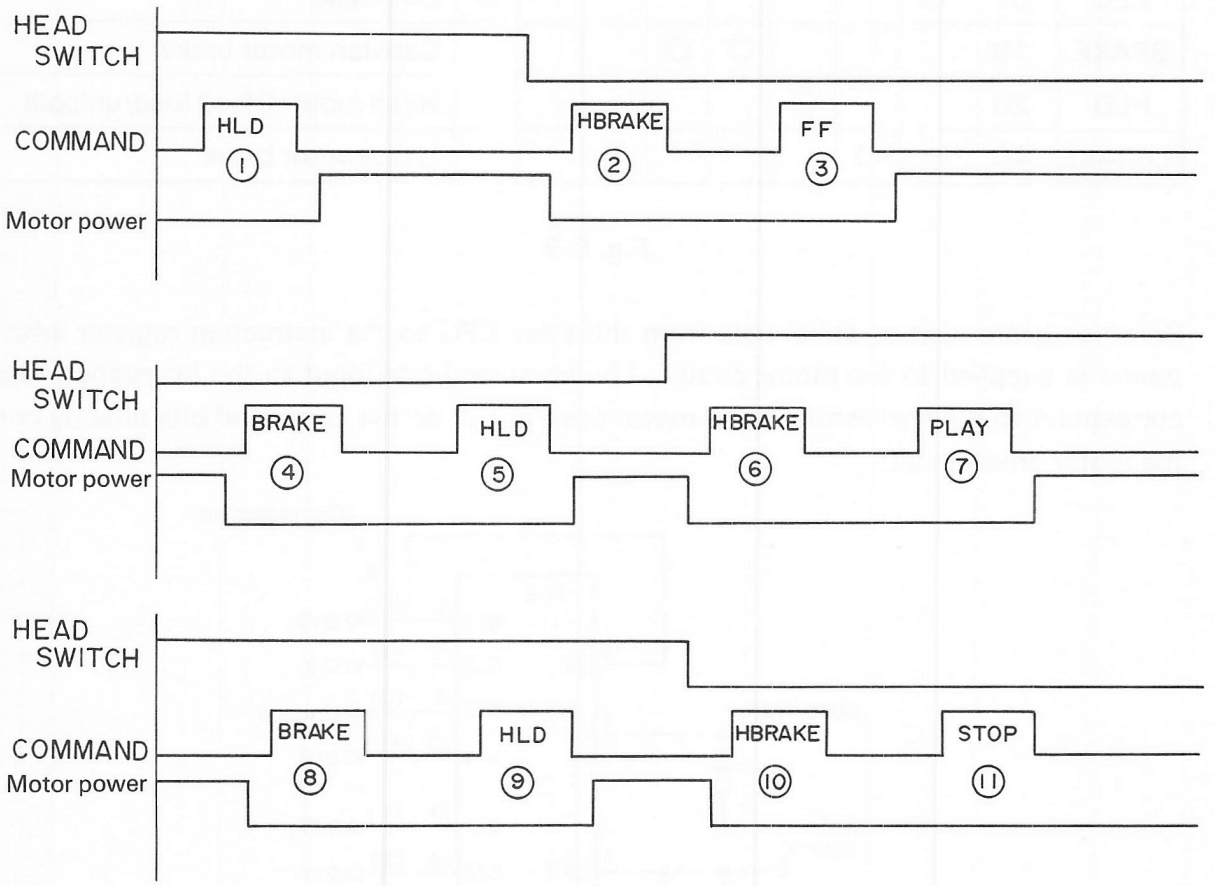

Fig. 4-11

(1) Check the R/W head switch, and confirm that the tape is unloaded. If it is loaded, operate the head motor to unload it.
(In the diagram below, the tape is unloaded if shaft C and the pinch roller are out of contact with each other; or loaded if otherwise.)

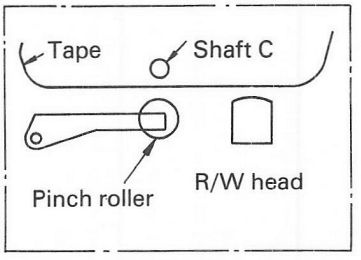

Fig. 4-12

(2) After turning power off, short both terminals of the motor to brake the rotation of the head mortor by its moment of inertia.
(3) Drive the capstan motor without speed control to wind the tape forward at high speed to the desired count (on the photo-reflector counter).
(4) After turning power off, short both terminals of the motor to brake the capstan motor.
(5) Set the R/W head into a loaded state.
(6) Brake the head motor which was driven by the above steps.
(7) Wind the tape at constant speed (under speed control at 2.4 cm/sec), and read data.
(8) Brake the capstan motor.
(9) Set the R/W head into an unloaded state.
(10) Brake the head motor.
(11) Send a stop command to clear the instruction register. (Clear it to 00 inside.)

4.1.8 Motor Speed Control

The rotating speed of the capstan motor is controlled only when it operates (read or write) by the PLAY or REC command. The capstan motor has a timing generator for checking its rpm, and speed is controlled by processing its timing period by IC1 (motor control IC).

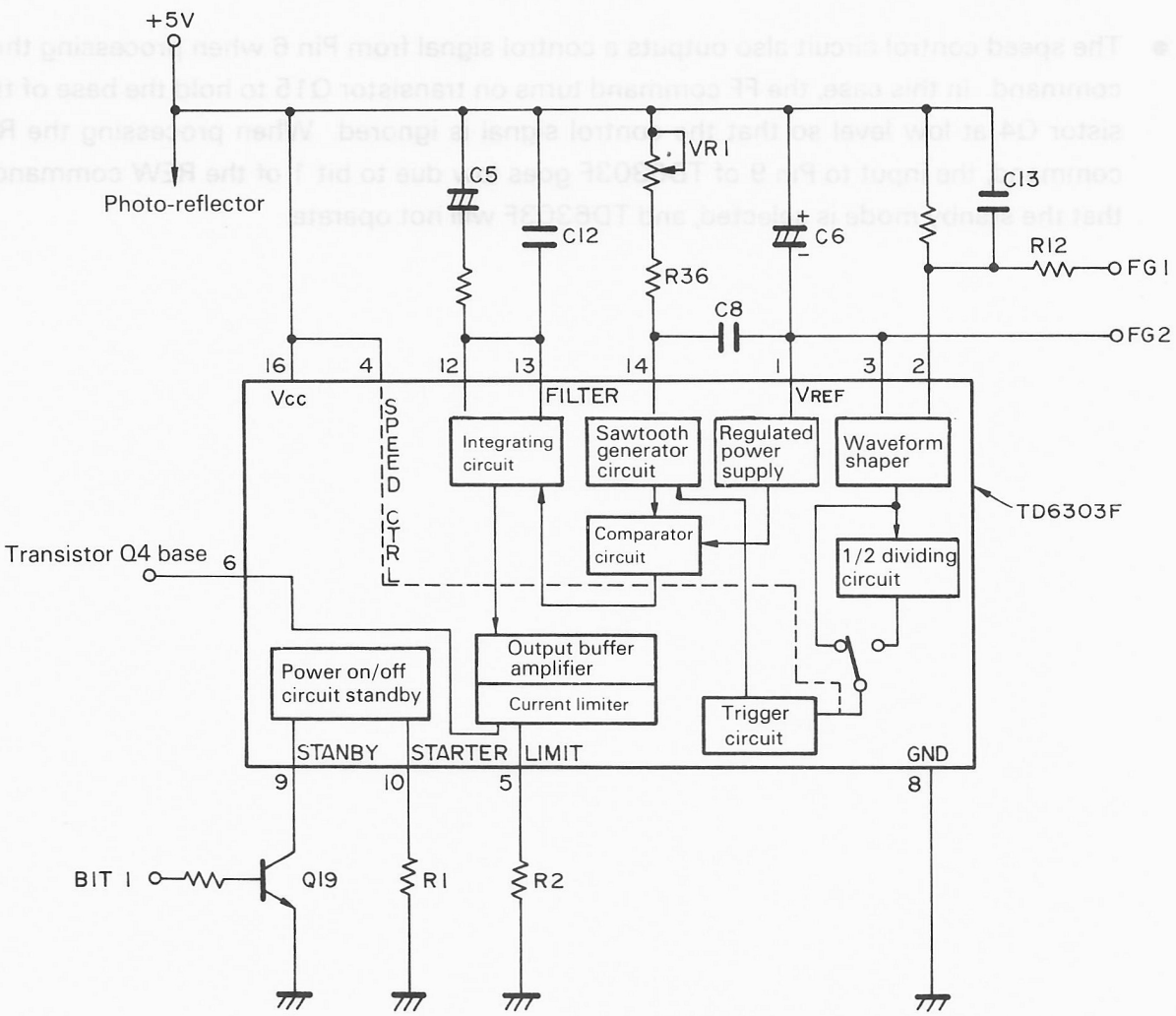

Fig. 4-13

(1) Operation

First, the signal FG2 from the timing generator enters Pin 3 of TD6303F, where the waveform is shaped. Here, the microcassette is running at 2.4 cm/sec, and the input to Pin 4 is at high level so that the signal is sent directly to the trigger circuit without going through the dividing circuit, and the output of the trigger circuit is supplied to the sawtooth generator circuit.

Since the basic clock of 400 Hz generated by an external oscillator circuit (composed of C8, R36 and VR1) is input to the sawtooth generator circuit, the periods of this basic clock and the feedback signal from the timing generator are compared, and the result is routed via the integrating circuit, output buffer amplifier, and current limiter to Pin 6, from which it is sent out. Pin 6 controls transistor Q4 in the motor circuit, and changes the voltage to be applied to the M+ terminal of the motor to change the motor rpm, thereby assuring that the tape is wound at constant speed.

Capstan motor

- Normally runs at 2400 rpm.

Timing generator

- Has 10 poles, and is coupled to the capstan motor shaft.

$$\frac{2400\ (\text{rpm}) \times 10\ (\text{poles})}{60\ (\text{seconds})} = 400\ \text{Hz (Basic clock frequency)}$$

- The speed control circuit also outputs a control signal from Pin 6 when processing the FF command. In this case, the FF command turns on transistor Q15 to hold the base of transistor Q4 at low level so that the control signal is ignored. When processing the REW command, the input to Pin 9 of TD6303F goes low due to bit 1 of the REW command so that the stanby mode is selected, and TD6303F will not operate.

4.1.9 Read/Write Circuit

The read/write circuit can be divided into the read/write bias supply circuit, read circuit, write circuit, and erase head circuit.

(1) Bias supply circuit

Read or write operation requires a steady bias for exciting the R/W head. First, transistor Q8 is turned on by a PW SW signal, causing transistor Q7 to turn on and the voltage V_L to be supplied to IC5. Here, the input voltage to Pin 3 of IC5 is controlled by zener diode ZD2 so an input voltage of about 2V is supplied. Then, the output of Pin 1 is fed back to Pin 2 for non-inverted DC amplification. In this case, the amplification ratio is 1 because Pin 1 and Pin 2 are directly connected to each other. Actually, therefore, Pin 2 is used not as a amplifier but as a regulator to stabilize the voltage.

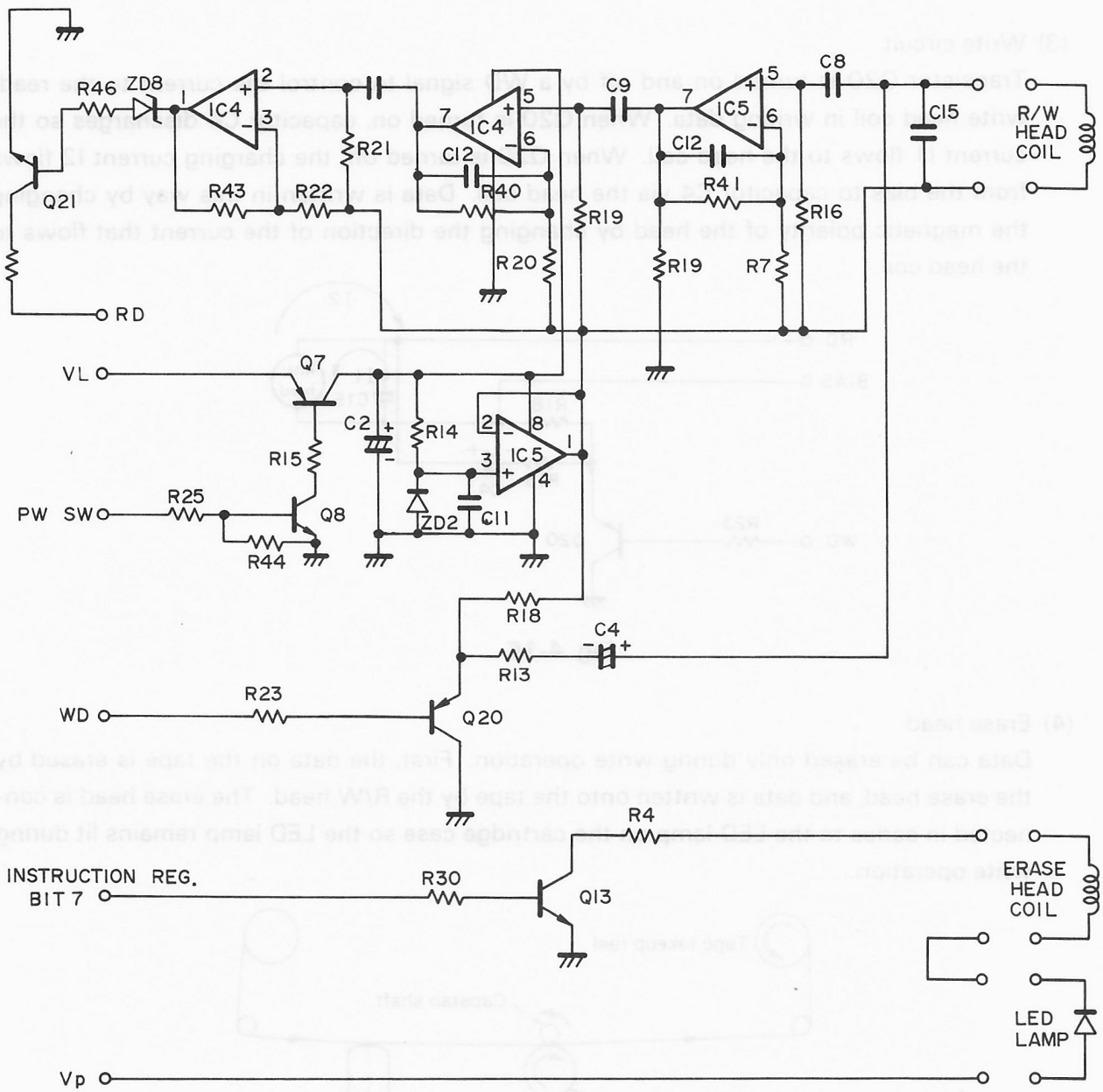

Fig. 4-14

(2) Read circuit

First, the input signal is amplified 34 dB($Av = 1 + \frac{R40}{R20}$) by IC5 to generate a signal of about 0.8 Vp-p, which is output from Pin 7. Then, the signal is amplified twice by IC4, and finally transistor Q21 is switched on and off by using the zener yield effect of zener diode ZD8. After that, the read data is read out via IC3.

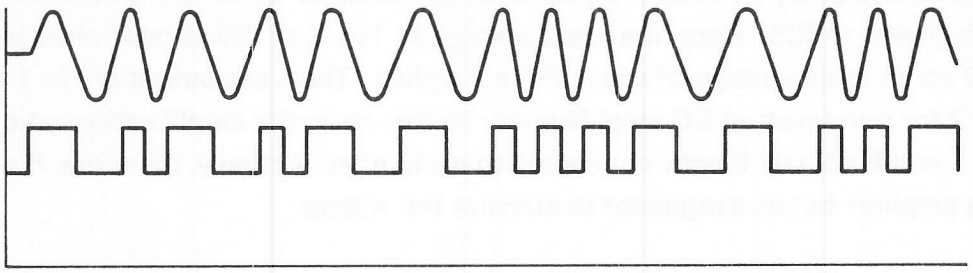

Fig. 4-15

(3) Write circuit

Transistor Q20 is turned on and off by a WD signal to control the current to the read/write head coil in writing data. When Q20 is turned on, capacitor C4 discharges so the current I1 flows to the head coil. When Q20 is turned off, the charging current I2 flows from the bias to capacitor C4 via the head coil. Data is written in this way by changing the magnetic polarity of the head by changing the direction of the current that flows to the head coil.

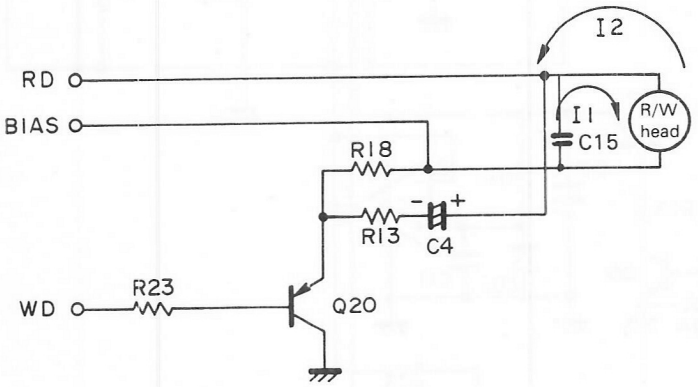

Fig. 4-16

(4) Erase head

Data can be erased only during write operation. First, the data on the tape is erased by the erase head, and data is written onto the tape by the R/W head. The erase head is connected in series to the LED lamp on the cartridge case so the LED lamp remains lit during write operation.

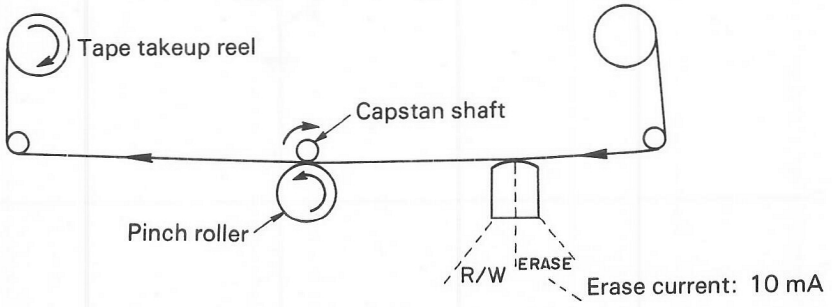

Fig. 4-17

4.1.10 Selector Circuit

The selector is controlled by a clock. When the clock is at high level, transistor Q17 is turned on, and its collector goes low so inputs to Pins 1 and 11 are output to Pins 2 and 10 respectively. If the clock is at low level, transistor Q17 is not turned on so Pins 5 and 6 go high. Thus, inputs to Pins 4 and 8 are output to Pins 3 and 9 respectively.

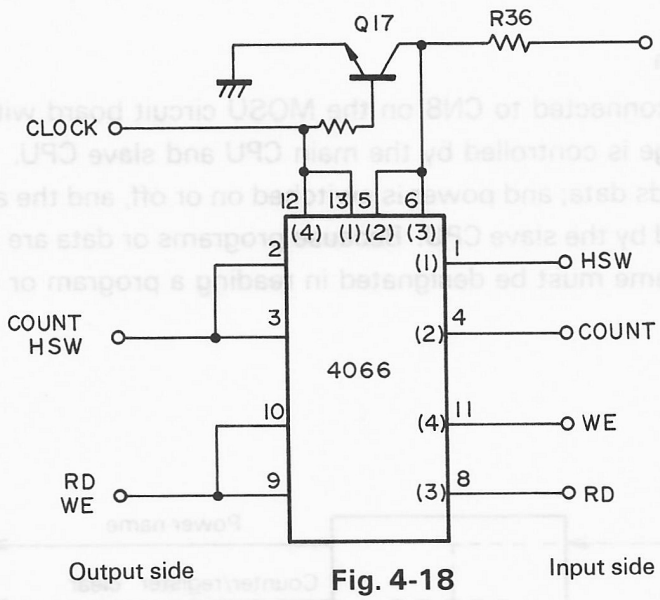

Fig. 4-18

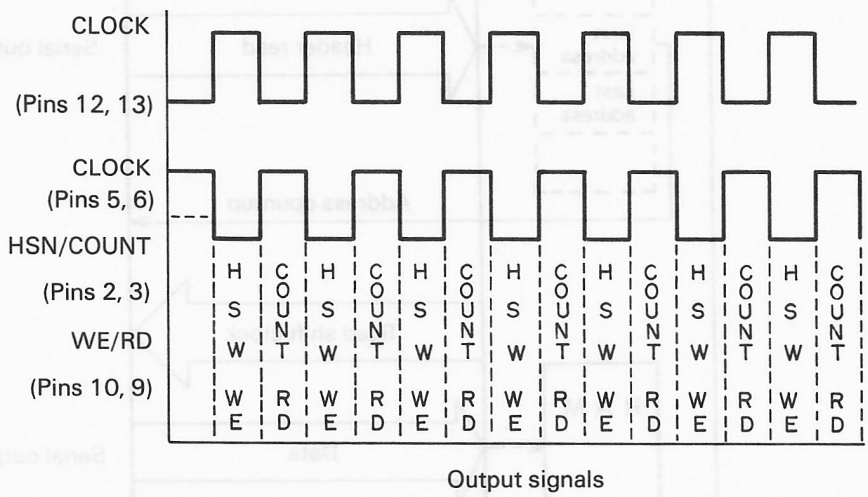

Fig. 4-19

4.2 ROM Cartridge

C MOS/N MOS ROM that has a pin arrangement compatible with the 2764 (8 KB), 27128 (16 KB), and 27256 (32 KB) as well as P-ROM can be placed in the ROM cartridge. The ROM cartridge offers various advantages, that is, the programs will not be damaged by an uncontrolled run because the programs and data are stored in the ROM; access time is far shorter than that of cassette tapes; and perfect read can be assured.

4.2.1 Theory of Operation

The ROM cartridge is connected to CN8 on the MOSU circuit board with the cable set No. 701. The ROM cartridge is controlled by the main CPU and slave CPU. The main CPU outputs addresses and reads data; and power is switched on or off, and the address counter and shift register are cleared by the slave CPU. Because programs or data are stored in files in the ROM cartridge, a file name must be designated in reading a program or data from the ROM cartridge.

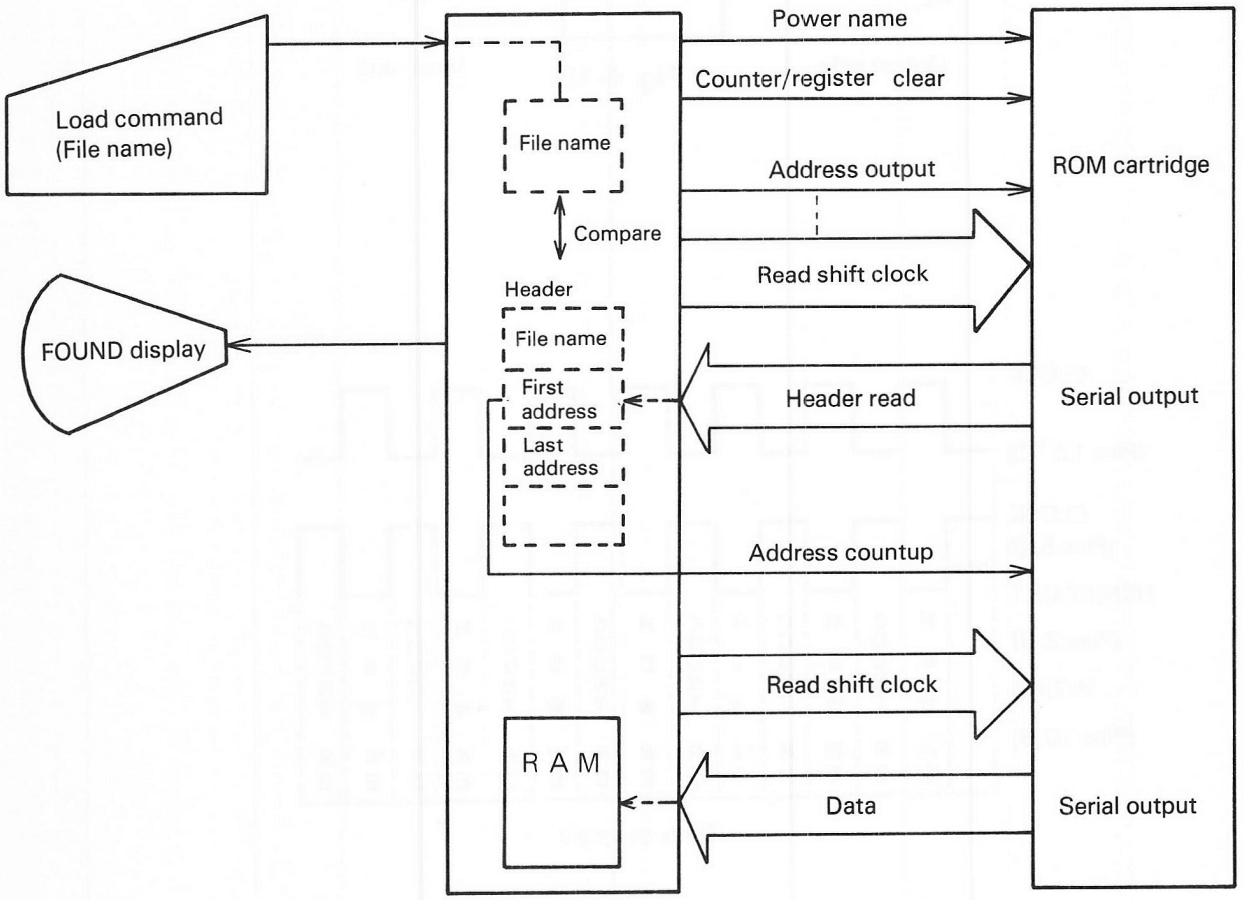

Fig. 4-20

First, when a load command (read) is excuted, the cartridge power is turned on, and the address counter and shift register are cleared. Then, the header data is read out of address 0000 in the form of serial data from the ROM cartridge by the address output and read shift clocks to the ROM cartridge. If the header has the file name that is designated by the load command, the data (with the first address) in the header is read into the system area of the RAM, and the word FOUND is displayed on the LCD screen. The operaton proceeds until the first address of the designated file is reached. When the first address of the designated file is reached, the read shift clocks are read, and the data is read into the main CPU in the form of serial data. (8 shift clocks are necessary for one byte of data.) This operation is continued until the last address, and the read data is converted into parallel data byte by byte, and then stored in the designated RAM address.

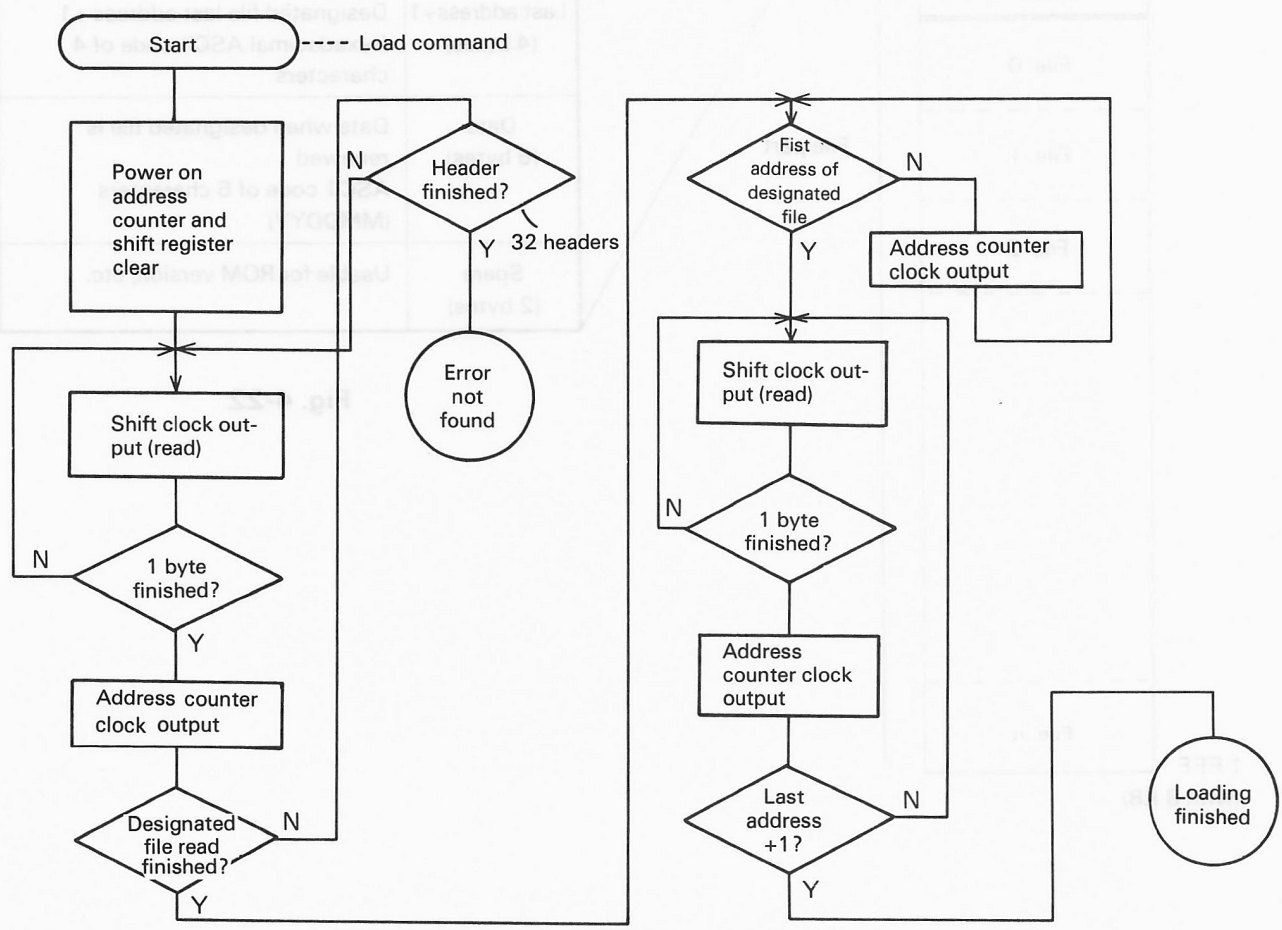

Fig. 4-21

4.2.2 ROM Format

The HX-20 uses the ROM cartridge as a sequential file so headers are employed in the first address part for the purpose of facilitating access to the files. Up to 31 headers can be used as desired.

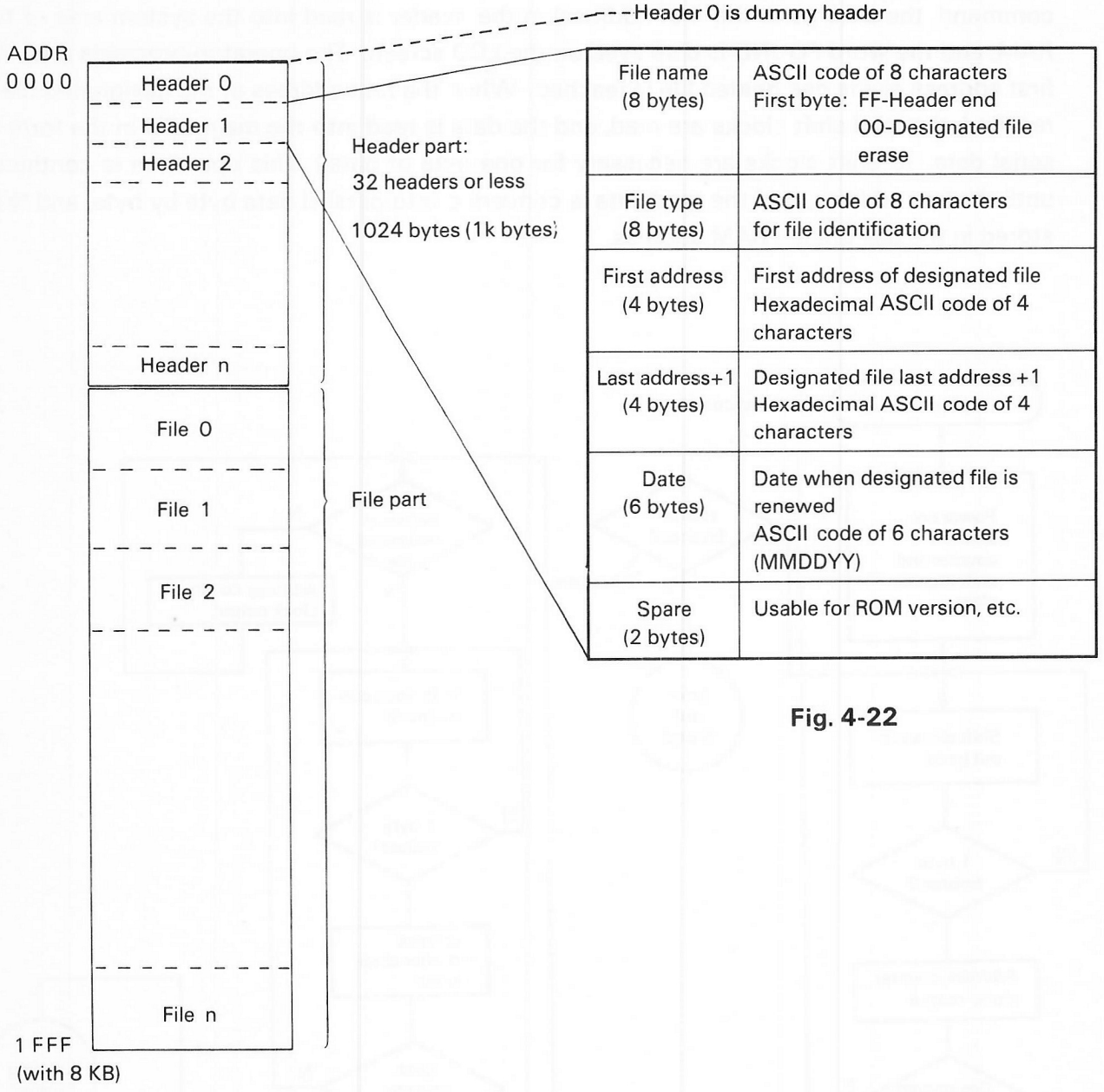

File name (8 bytes)	ASCII code of 8 characters First byte: FF-Header end 00-Designated file erase
File type (8 bytes)	ASCII code of 8 characters for file identification
First address (4 bytes)	First address of designated file Hexadecimal ASCII code of 4 characters
Last address+1 (4 bytes)	Designated file last address +1 Hexadecimal ASCII code of 4 characters
Date (6 bytes)	Date when designated file is renewed ASCII code of 6 characters (MMDDYY)
Spare (2 bytes)	Usable for ROM version, etc.

Fig. 4-22

4.2.3 Hardware Composition

The hardware consists of the power supply, address counter, shift register, and ROM.

Power supply:	After DC-DC conversion of voltage V_B, +5V is generated by a regulator.
Address couter:	Consists of two counter ICs, and can designate addresses up to 32 KB.
Shift register:	Converts the data read from ROM into serial data
ROM:	2764-pin compatible ROM

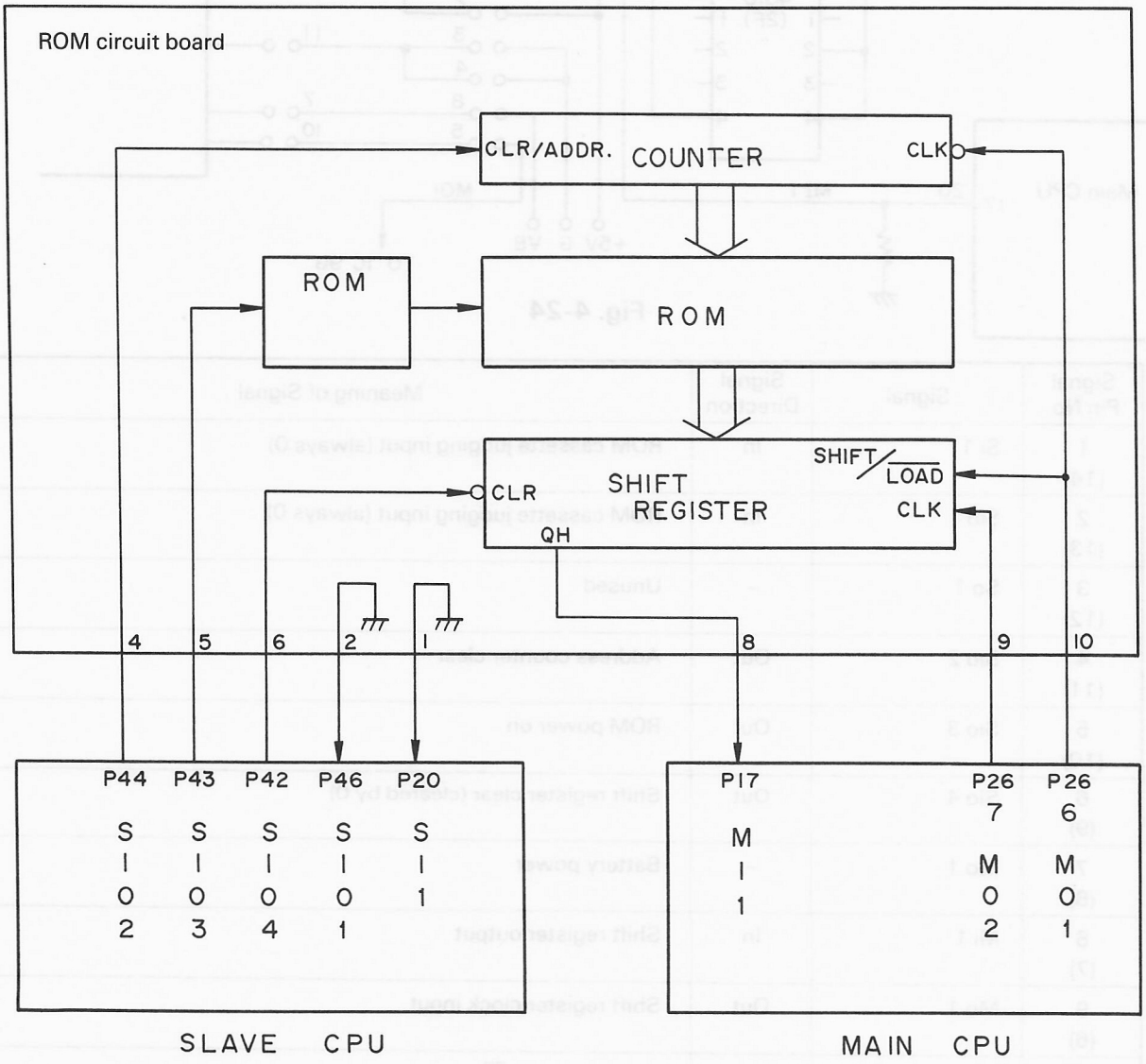

Fig. 4-23

4.2.4 Interface

The cable set No. 701 is used for connection to the MOSU circuit board.

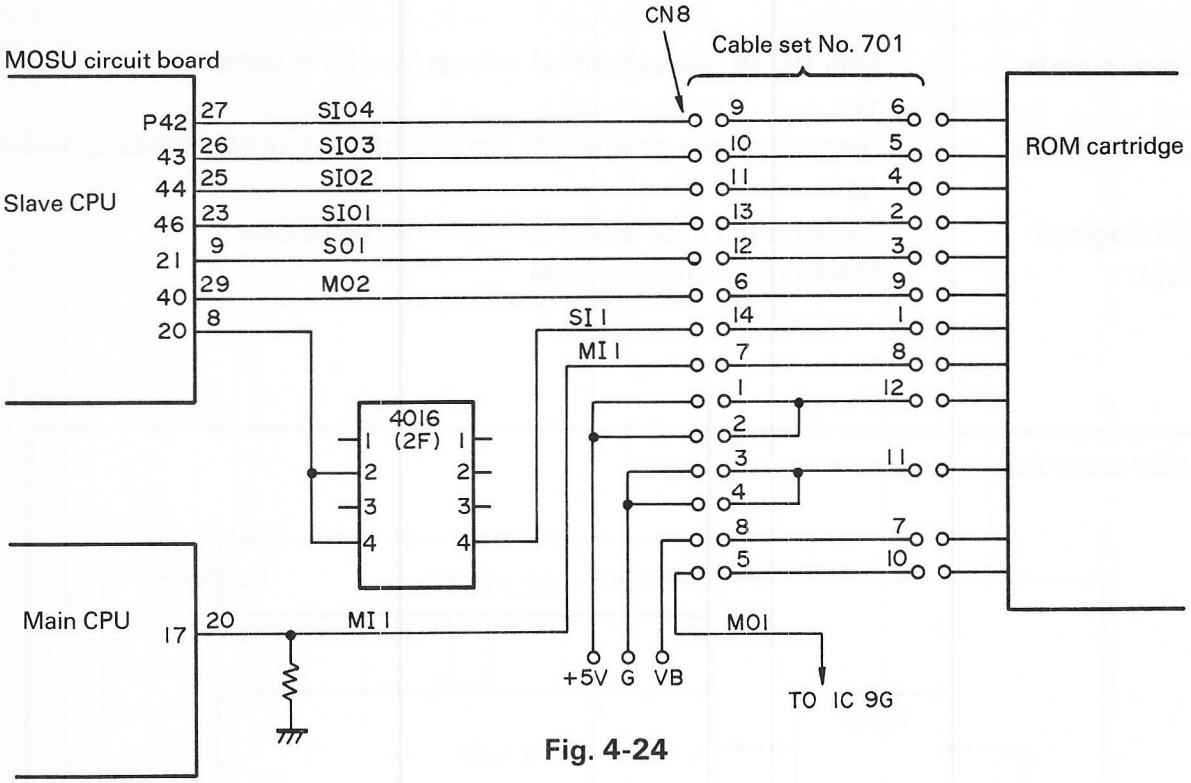

Fig. 4-24

Signal Pin No.	Signal	Signal Direction	Meaning of Signal
1 (14)	Si 1	In	ROM cassette judging input (always 0)
2 (13)	Sio 1	In	ROM cassette judging input (always 0)
3 (12)	So 1	–	Unused
4 (11)	Sio 2	Out	Address counter clear
5 (10)	Sio 3	Out	ROM power on
6 (9)	Sio 4	Out	Shift register clear (cleared by 0)
7 (8)	Mo 1	–	Battery power
8 (7)	Mi 1	In	Shift register output
9 (6)	Mo 1	Out	Shift register clock input
10 (5)	Mo 1	Out	Counter input (⌐↓_) Shift register shift/load switching
11 (4.3)	G	–	Ground
12 (2.1)	+5V	–	5V power (supplied by switching on)

Figures in parentheses indicate the pin numbers of CN8 on the MOSU circuit board.

Fig. 4-25

4.2.5 Power Supply

The power supply converts the battery voltage of VB (+5V) into a +8V, which is regulated into a stabilized voltage by a regulator and supplied to the circuits. This permits use of various types of ROMs compatible with the 2764 (ROMs with different loads can be used), and assures circuit voltage stability against load variation during operation

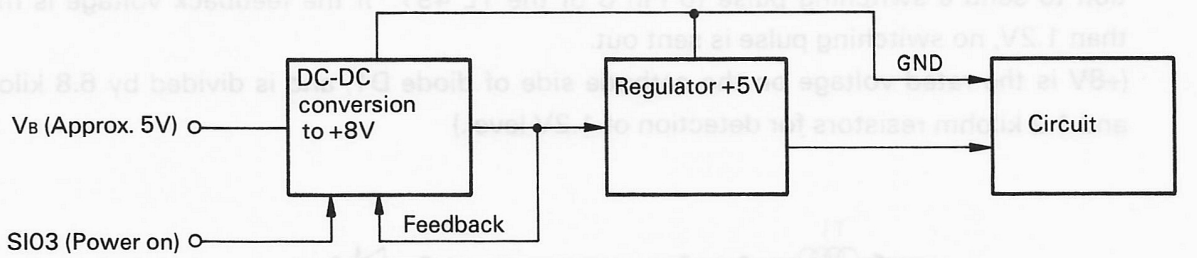

Fig. 4-26

(1) Power on

Power is turned on as the slave CPU on the MOSU circuit board sends an SI03 signal. This signal turns on transistor Q3, causing transistor Q2 to turn on. Transistor Q2 outputs the voltage VB from its collector to Pin 14 (Vcc) of the TL 497 to drive it, and a switching pulse is generated from it by an external capacitor C9. Transistor Q1 outputs the voltage VB (about 5V), which is supplied to capacitor C1 and regulator SR1 via R2, T1 and D1.

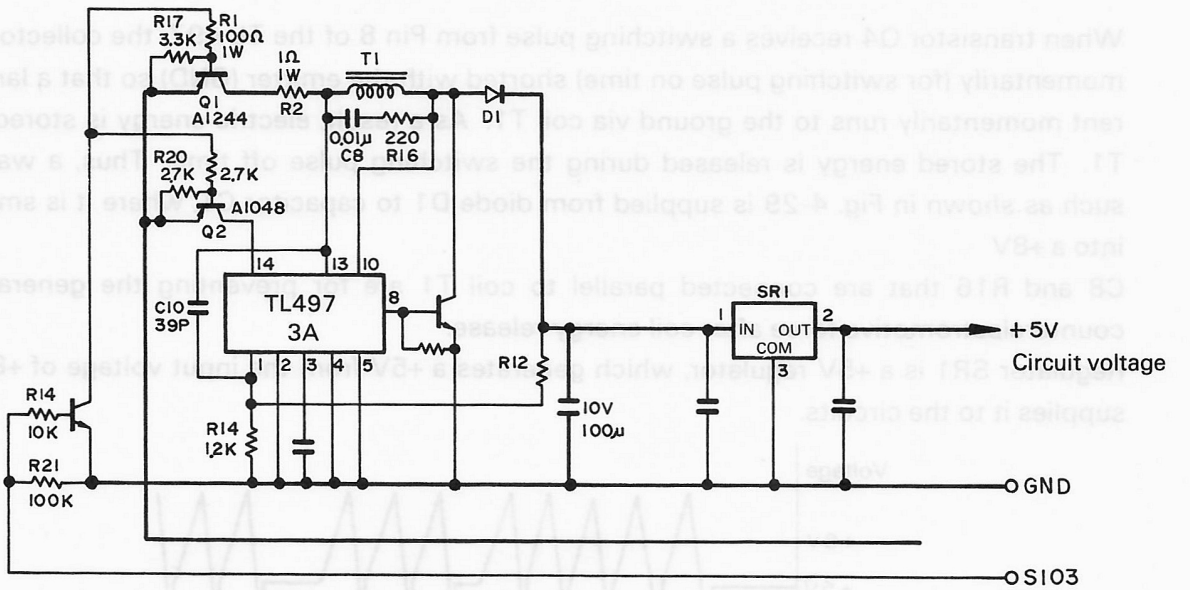

Fig. 4-27

(2) Voltage conversion (DC-DC conversion from +5V to +8V)

After power is turned on, the dividing circuit (R13: 6.8 kilohms; R14: 1.2 kilohms) on the cathode side of diode D1 divides the output voltage, and a feedback voltage is returned to the comparator input of the TL 497. The TL 497 generates a voltage of 1.2V as a compare voltage inside. This voltage is compared with the feedback voltage to the comparator input. If the feedback voltage is less than 1.2V, the oscillator circuit is put into operation to send a switching pulse to Pin 8 of the TL 497. If the feedback voltage is more than 1.2V, no switching pulse is sent out.

(+8V is the rated voltage on the cathode side of diode D1, and is divided by 6.8 kilohm and 1.2 kilohm resistors for detection of 1.2V level.)

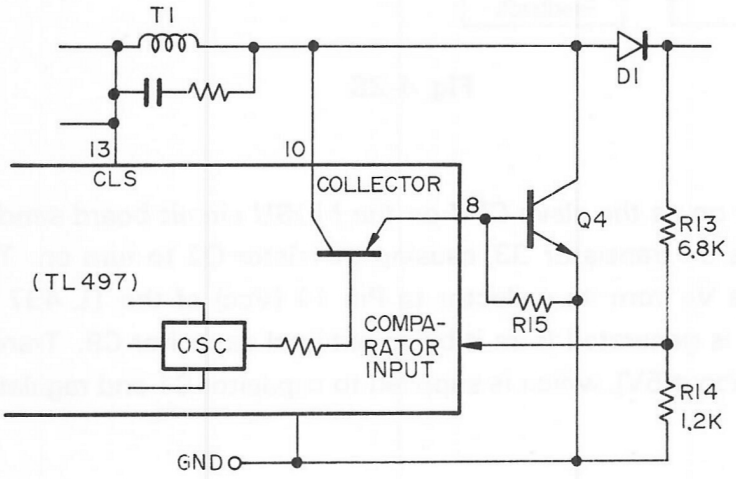

Fig. 4-28

When transistor Q4 receives a switching pulse from Pin 8 of the TL 497, the collector (V_B) is momentarily (for switching pulse on time) shorted with the emitter (GND) so that a large current momentarily runs to the ground via coil T1. As a result, electric energy is stored in coil T1. The stored energy is released during the switching pulse off time. Thus, a waveform such as shown in Fig. 4-29 is supplied from diode D1 to capacitor C1, where it is smoothed into a +8V.

C8 and R16 that are connected parallel to coil T1 are for preventing the generation of counterelectromotive force after coil energy release.

Regulator SR1 is a +5V regulator, which generates a +5V from the input voltage of +8V, and supplies it to the circuits.

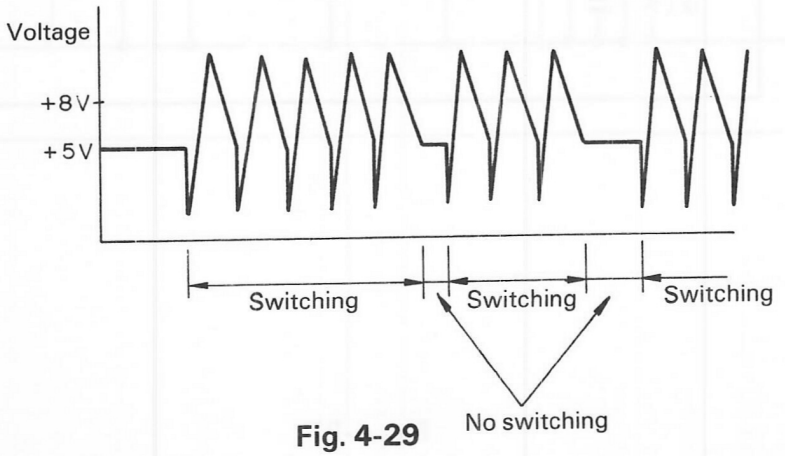

Fig. 4-29

4.2.6 Address Counter

The address counter uses two counter ICs, and designates addresses in sequence from the lowest, using MO1 signals. It is necessary, therefore, to continuously output address shift pulses (MO1 signals) until the first address of the designated file is reached even after header read. (This is because random address designation cannot be made.)

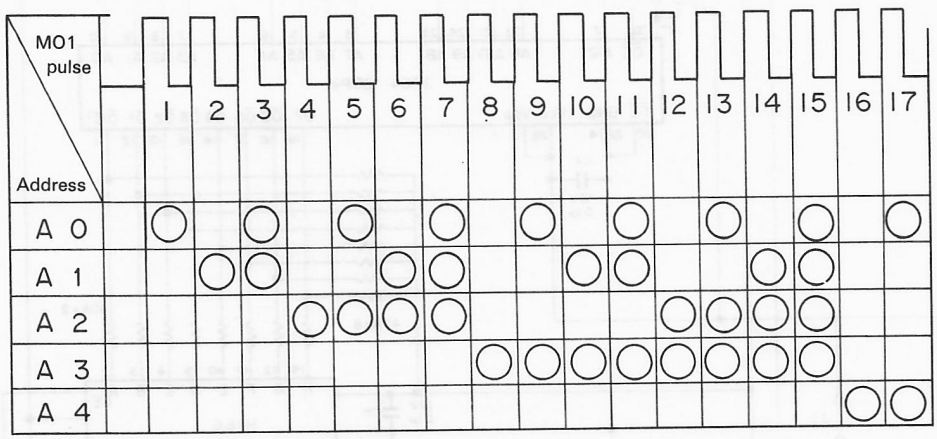

Fig. 4-30

4.2.7 Shift Register

The shift register reads 1 byte from the ROM, and reads it out to the serial data line MI1 bit by bit, using a shift clock signal MO2.

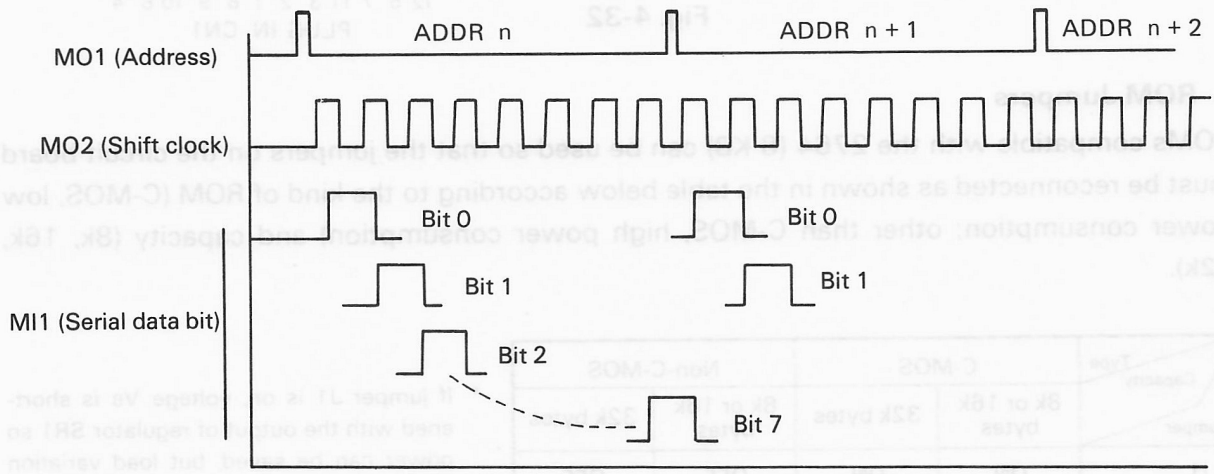

Fig. 4-31

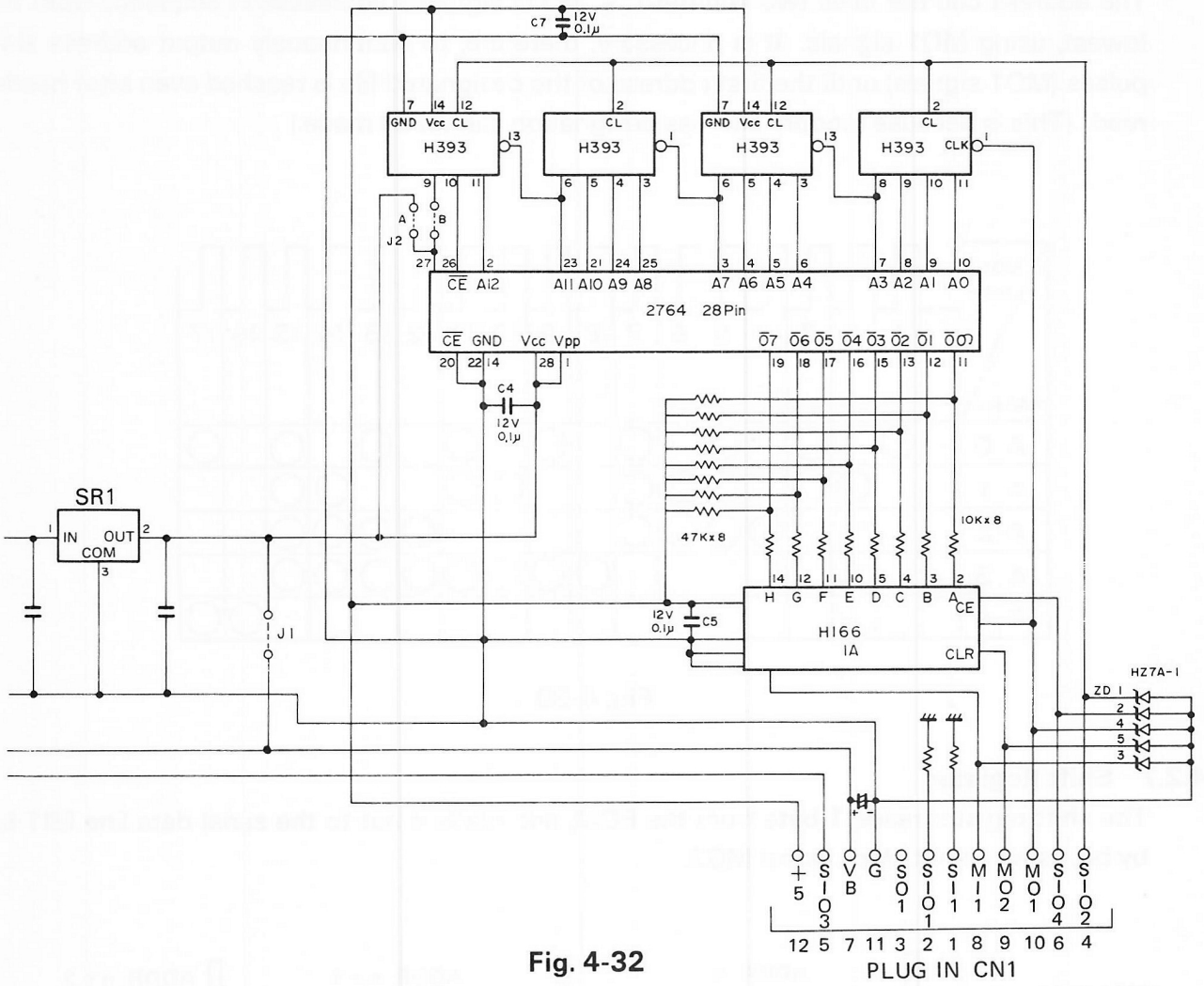

Fig. 4-32

4.2.8 ROM Jumpers

ROMs compatible with the 2764 (8 KB) can be used so that the jumpers on the circuit board must be reconnected as shown in the table below according to the kind of ROM (C-MOS, low power consumption; other than C-MOS, high power consumption) and capacity (8k, 16k, 32k).

Type / Capacity / Jumper	C-MOS		Non-C-MOS	
	8k or 16k bytes	32k bytes	8k or 16k bytes	32k bytes
J1	ON	ON	OFF	OFF
J2-A	ON	OFF	ON	OFF
J2-B	OFF	ON	OFF	ON

* If jumper J1 is on, voltage V_B is shortened with the output of regulator SR1 so power can be saved, but load variation will directly affect the battery voltage.

Fig. 4-33

4.2.9 Microcassette Identification

Identification is made by checking the levels of three signals as shown in the table below.

	MI 1 Main P17	SI 1 Slave P20	SI 01 Slave P46
ROM cartridge	LOW	LOW	LOW
Microcassette	HIGH	–	–
Spare	LOW	LOW	HIGH
Spare	LOW	HIGH	HIGH
NON OPTION CARTRIDGE	LOW	HIGH	LOW

Fig. 4-34

4.3 Expansion Unit

The expansion unit is used for additional installation of RAMs and ROMs in the HX-20, and can be attached to the expansion unit interface (CN7) for the HX-20. The expansion unit can mount RAMs and ROMs up to 32k bytes maximum, and is normally equipped with 16k bytes of RAMs. In mounting additional ROMs, part or all of the RAMs (16k bytes) that are the standard equipment of the expansion unit can be ignored by resetting the DIP switches and jumpers.

Thus, RAMs and ROMs can be added as suitable to a specific application.

Features of Expansion Unit

- The interface outputs address bus (16 lines), data bus (8 lines) and R/W signals in parallel so that the main CPU of the HX-20 can make direct access to the memories.
- No special power supply is required for the expansion unit because all the power that is necessary to drive it is supplied from the HX-20.
- The RAM area in the expansion unit can be backed up by the built-in batteries in the HX-20 so that, even if power is turned off, the programs (data) sotred in the RAMs of the expansion unit can be protected similar to the RAMs in the HX-20.
- Part of the RAM addresses and part or all of the ROM addresses in the expnasion unit overlap with the ROM addresses in the HX-20, so the addresses in the HX-20 and in the expansion unit are separately used through bank switching.

4.3.1 Hardware Composition

(1) The expansion unit consists of ROM and RAM select circuits and a bank control (bank switching) circuit. Fig. 4-27 shwos a block diagram of the expansion unit.

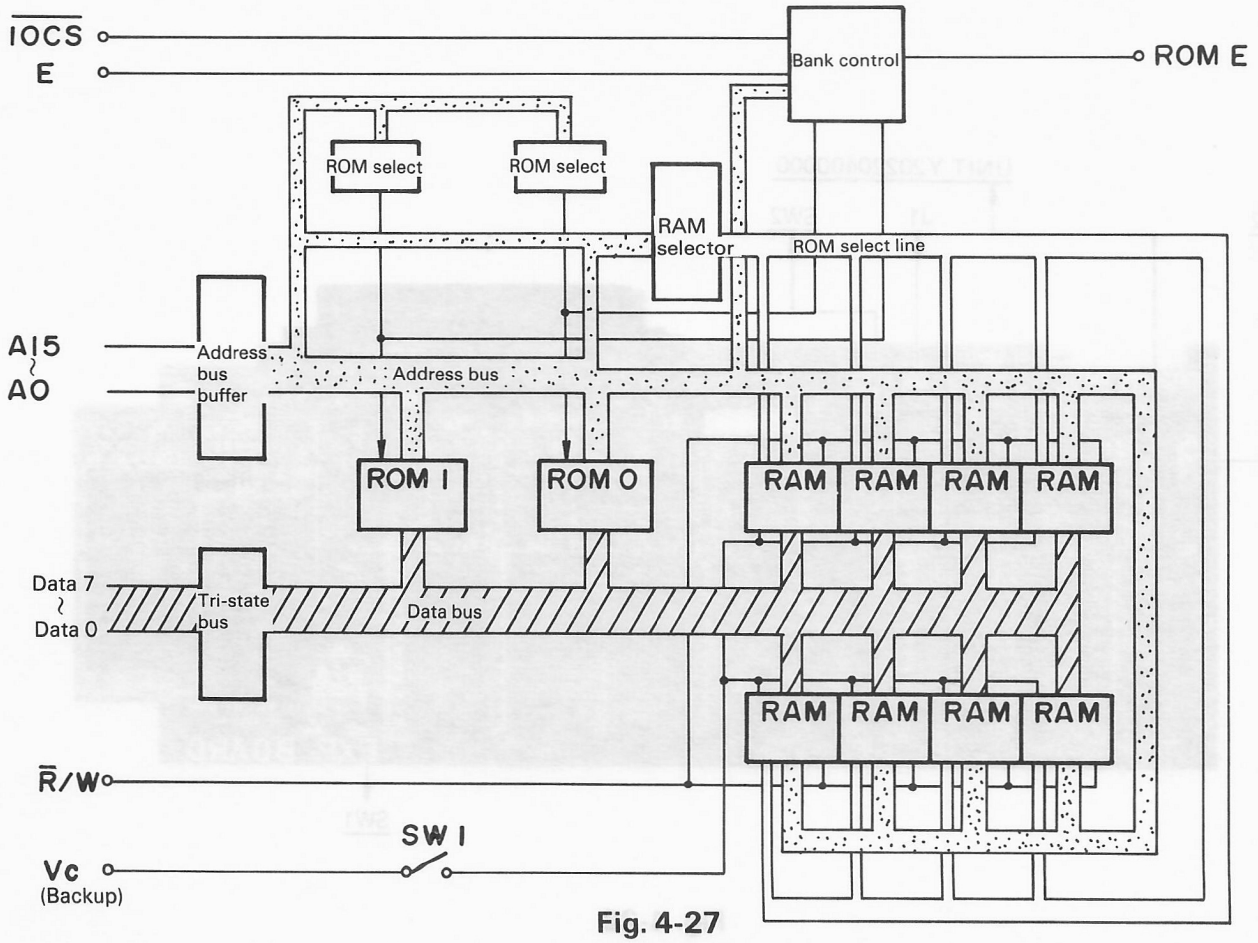

Fig. 4-27

(2) Expansion IC Socket

The expansion unit is normally equipped with 16k bytes of RAMs, and also has two 28-pin IC sockets for ROMs.

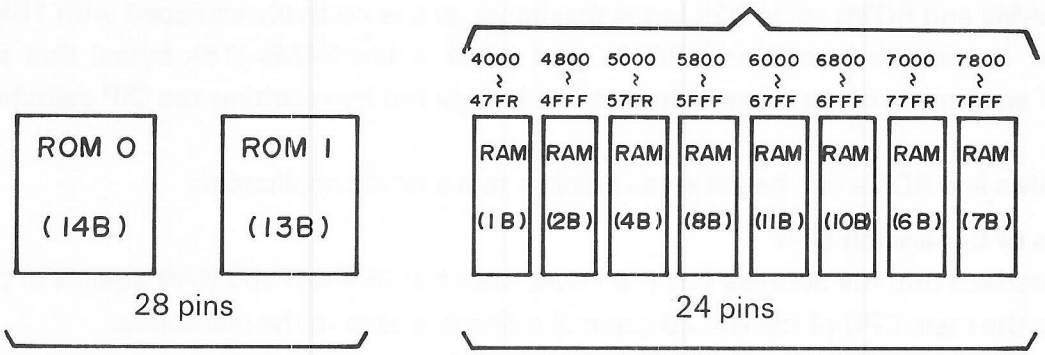

(2) RAM and ROM Composition

A total of 32k bytes maximum of RAMs and ROMs can be installed. ROM/RAM areas and types of ROMs (8KB/16KB) can be selected by means of the jumpers (J1, J2) and DIP switch (SW2) shown below.

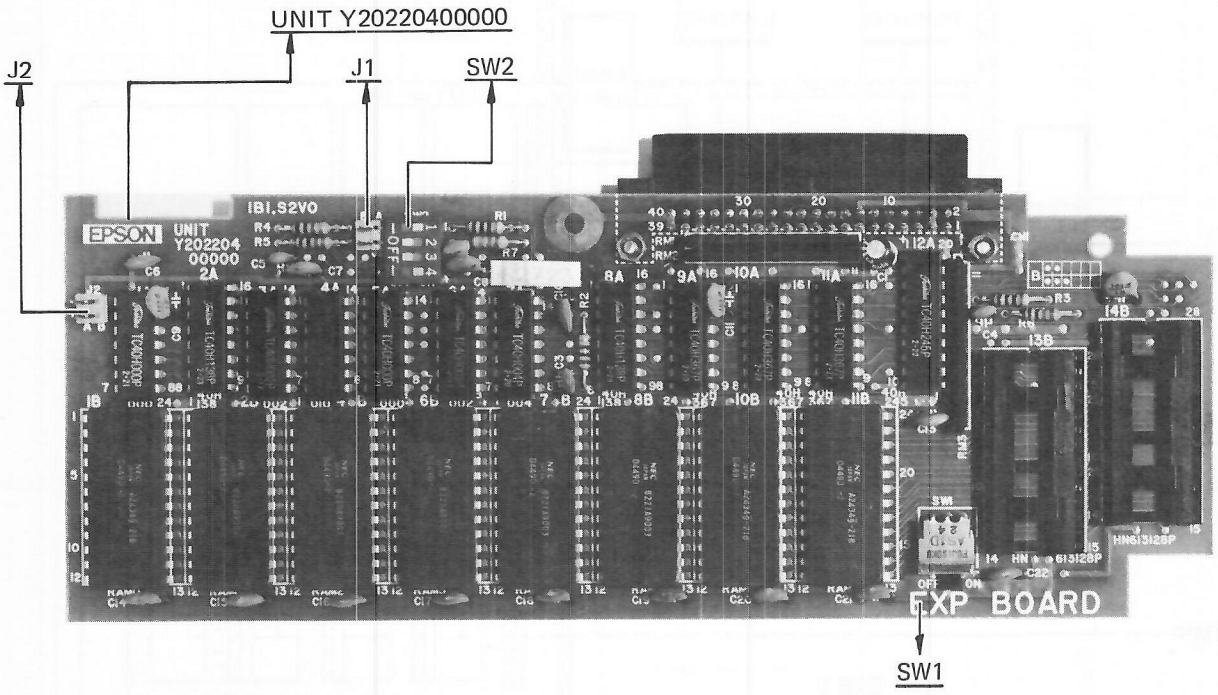

Fig. 4-28

4.3.2 ROM/RAM Select Circuits

● ROM select

Two expansion ROMs can be installed. ROM 0 (14B) is for the higher addresses, and ROM 1 (13B) for the lower addresses.

ROM addresses vary with ROM capacity (8k or 16k bytes) and quantity (1 ROM or 2 ROMs) so the circuit shown in Fig. 4-29 involving address A15 to A13, DIP switch (SW2) and jumper (J1/J2) is used for ROM selection.

For setting the DIP switch and reconnecting the jumper, refer to 4.3.3 Bank Switching and 4.3.5. Jumper (J1/J2) and DIP switch (SW1/2) Setting

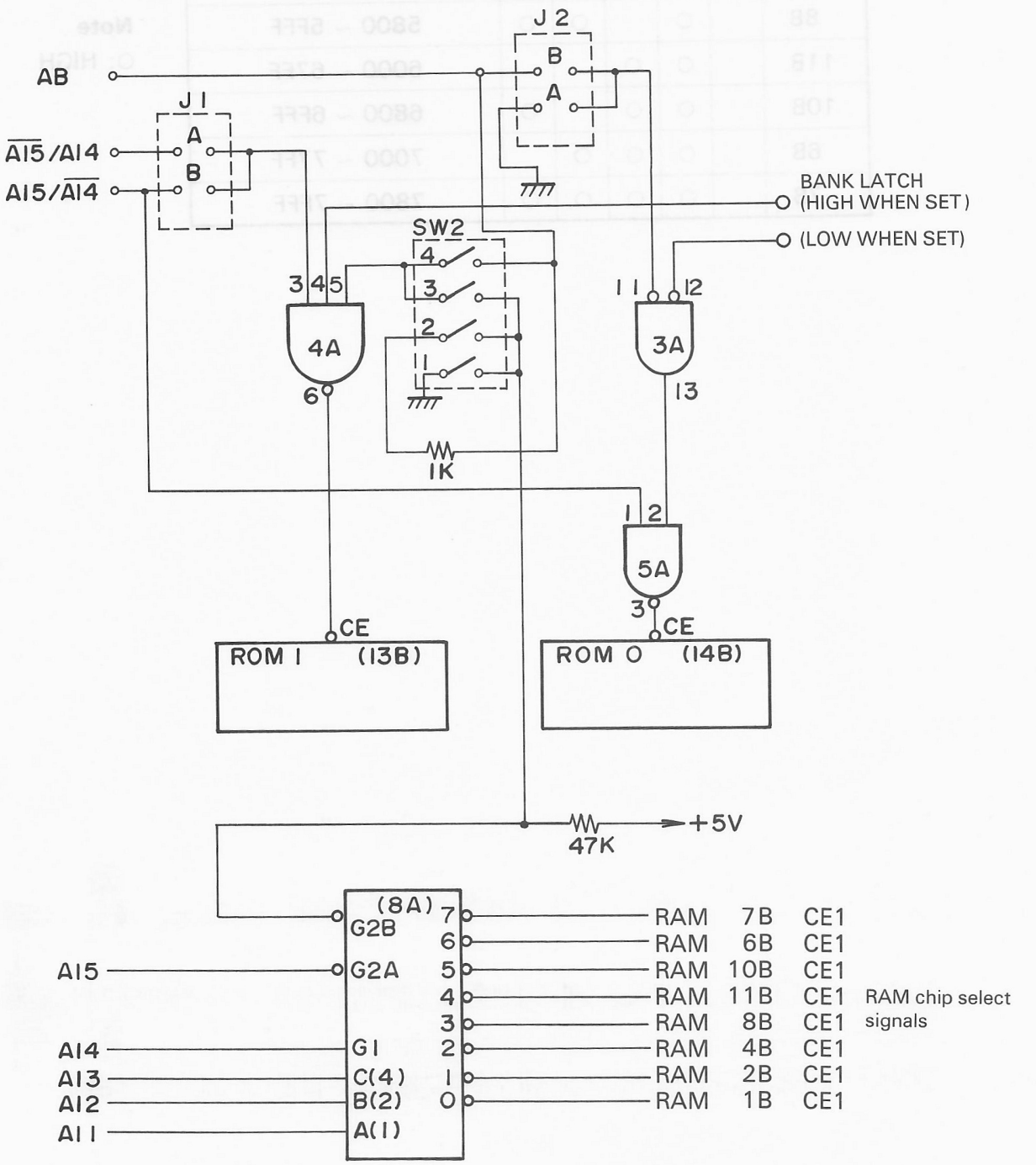

Fig. 4-29

● RAM selecting

RAM selection is basically performed by a decoder (IC 8A) using address lines A11 to A15. It is also controlled on the basis of DIP switch 2 setting because the range of addresses to be used must be changed depending on combination with ROMs.

Location	Address line					RAM address range
	15	14	13	12	11	
1B		○				4000 ~ 47FF
2B		○			○	4800 ~ 4FFF
4B		○		○		5000 ~ 57FF
8B		○		○	○	5800 ~ 5FFF
11B		○	○			6000 ~ 67FF
10B		○	○		○	6800 ~ 6FFF
6B		○	○	○		7000 ~ 77FF
7B		○	○	○	○	7800 ~ 7FFF

Note

○: HIGH

(Meanings of Jumpers and DIP Switch)

- SW2 bits 1 and 2 allocate ROM and RAM areas.
- SW2 bits 3 and 4 and jumpers J1 and J2 select a ROM capacity (8KB/16KB).

* Part or all of the 16k bytes of RAMs installed can be ignored by setting SW2 and the jumpers mentioned above.

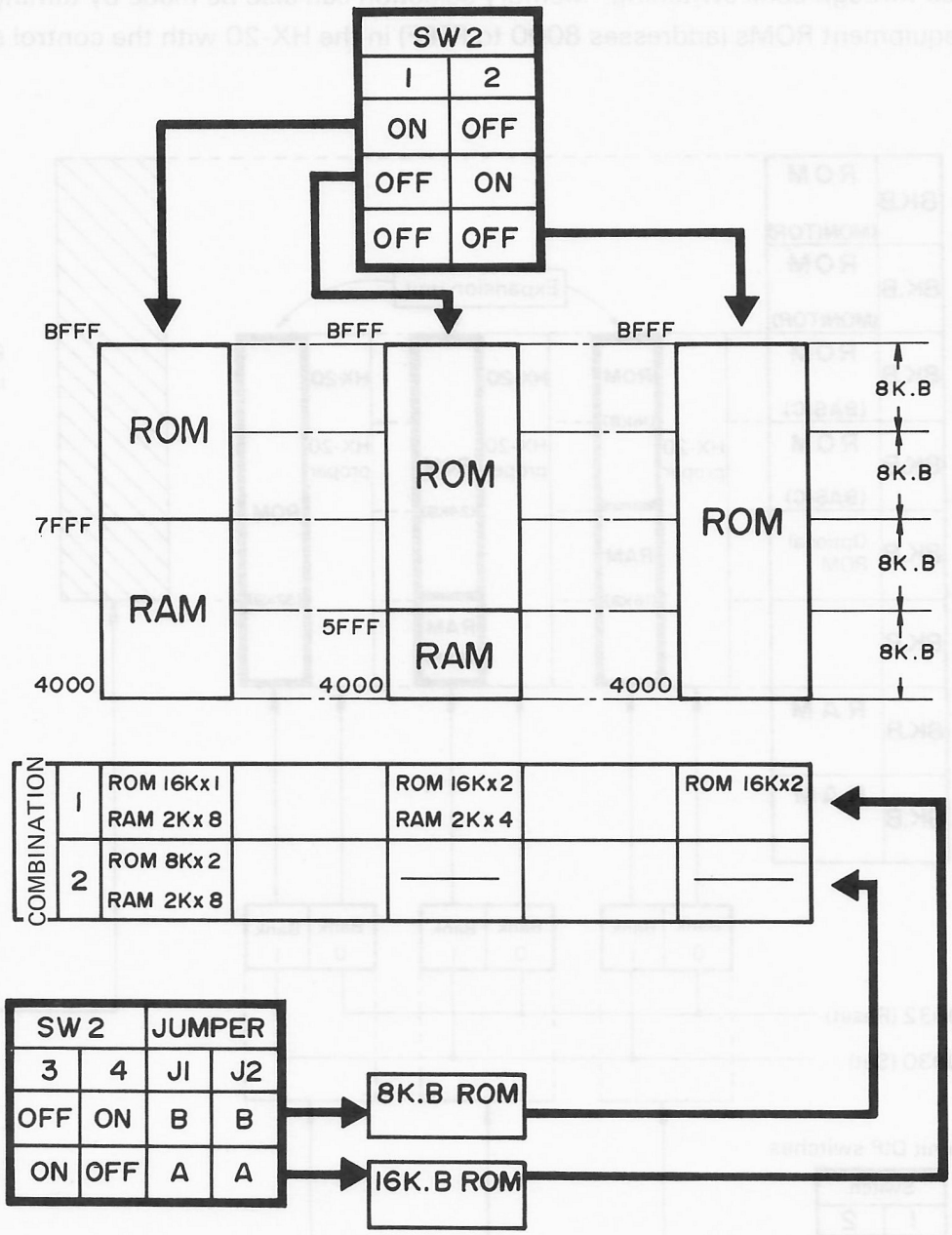

Fig. 4-30

4.3.3 Bank Switching

The HX-20 can directly select addresses up to 64k bytes (65,536 addresses). If the expansion unit is used, the total memory capacity of ROMs and RAMs may exceed 64k bytes.

However, the HX-20 can make access to memories having the same logic address through bank switching.

Memory selection by bank switching is done by hardware and sorfware. Since the HX-20 operates in the multiplexed/RAM mode, it can use external memories for addresses 00FF to FFFF. Thus, the addresses 4000 to BFFF (32k bytes in total) in the external memory area can be used through bank switching. Memory selection can also be made by turning off the standard equipment ROMs (addresses 8000 to FFFF) in the HX-20 with the control signal ROM E.

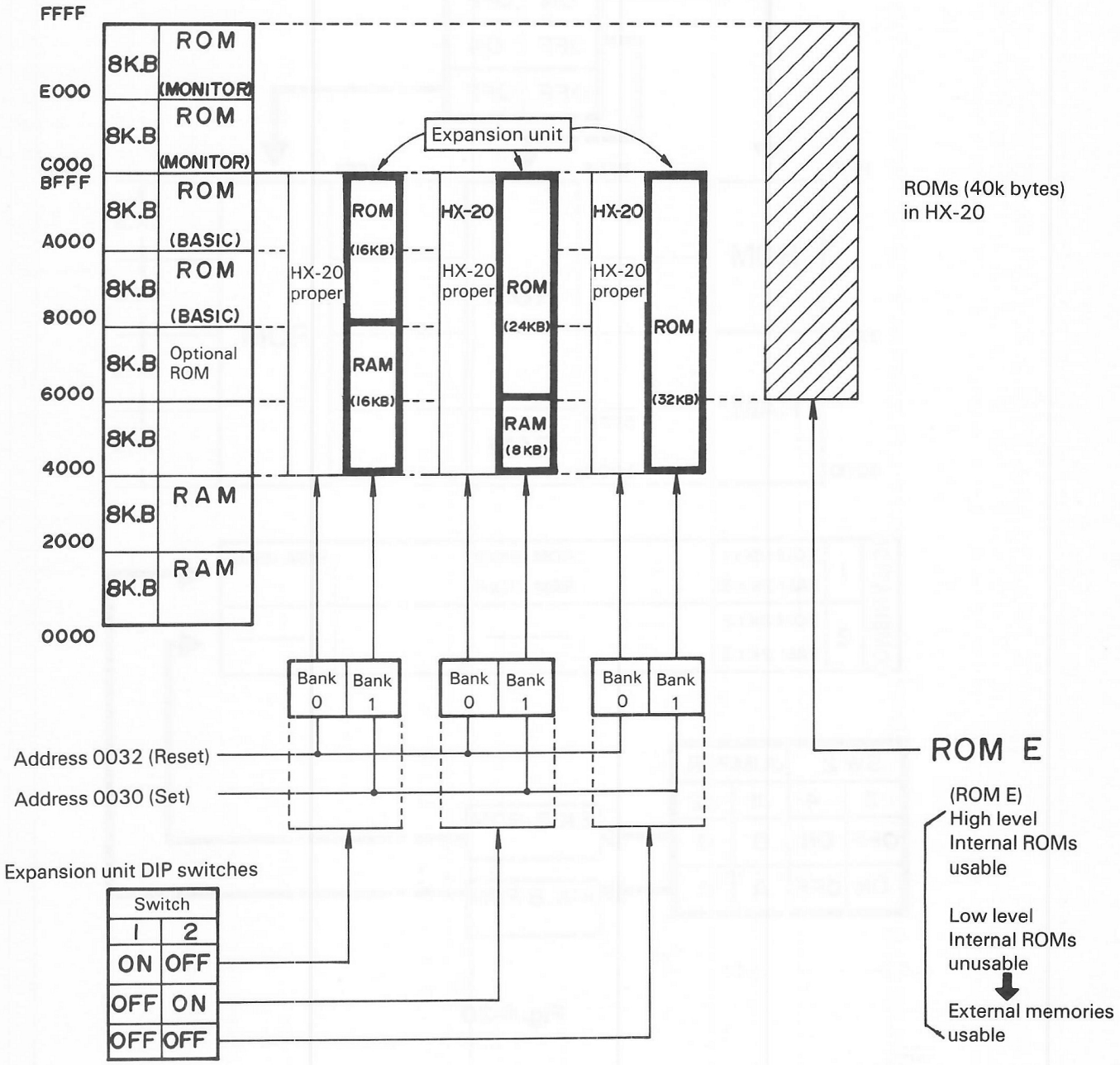

Fig. 4-31

● Bank switching is performed by a bank latch that uses address 0030 and 0032 and the ROM E signal based on control of address 14 and 15.

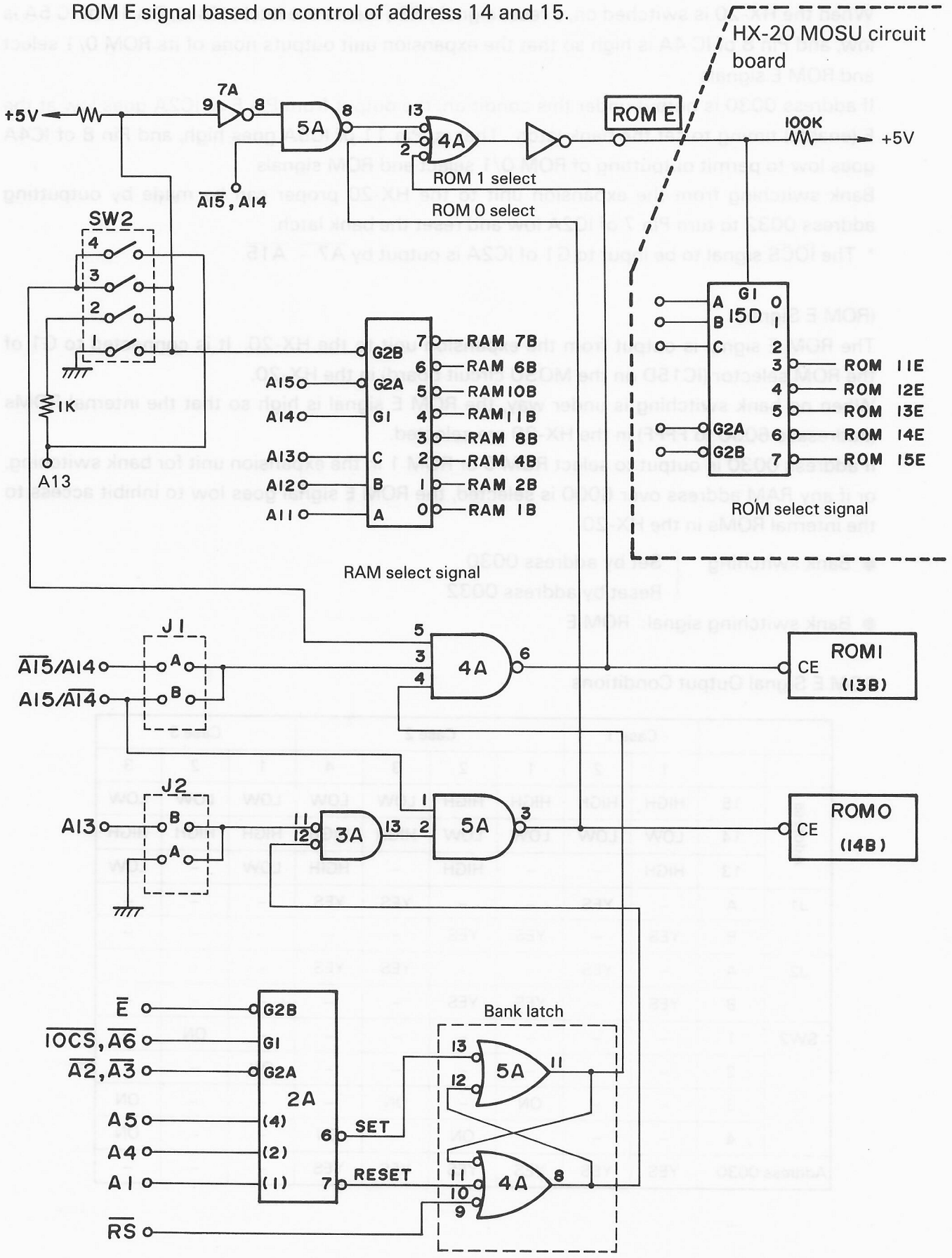

Fig. 4-32

(Bank Latch)

When the HX-20 is switched on, a reset signal ($\overline{RS}$) resets the latch. Thus, Pin 11 of IC 5A is low, and Pin 8 of IC 4A is high so that the expansion unit outputs none of its ROM 0/1 select and ROM E signals.

If address 0030 is output under this condition, the output from Pin 6 of IC2A goes low at the E (enable) timing to set the bank latch. That is, Pin 11 of IC5A goes high, and Pin 8 of IC4A goes low to permit outputting of ROM 0/1 select and ROM signals.

Bank switching from the expansion unit to the HX-20 proper can be made by outputting address 0032 to turn Pin 7 of IC2A low and reset the bank latch.

* The $\overline{IOCS}$ signal to be input to G1 of IC2A is output by $\overline{A7 \sim A15}$.

(ROM E Signal)

The ROM E signal is output from the expansion unit to the HX-20. It is connected to G1 of the ROM selector (IC15D on the MOSU circuit board) in the HX-20.

When no bank switching is under way, the ROM E signal is high so that the internal ROMs (addresses 6000 to FFFF) in the HX-20 are selected.

If address 0030 is output to select ROM 0 or ROM 1 in the expansion unit for bank switching, or if any RAM address over 6000 is selected, the ROM E signal goes low to inhibit access to the internal ROMs in the HX-20.

- Bank switching { Set by address 0030 / Reset by address 0032
- Bank switching signal: ROM E

ROM E Signal Output Conditions

		Case 1		Case 2				Case 3		
		1	2	1	2	3	4	1	2	3
Address	15	HIGH	HIGH	HIGH	HIGH	LOW	LOW	LOW	LOW	LOW
	14	LOW	LOW	LOW	LOW	HIGH	HIGH	HIGH	HIGH	HIGH
	13	HIGH	–	–	HIGH	–	HGIH	LOW	–	LOW
J1	A	–	YES	–	–	YES	YES	–	–	–
	B	YES	–	YES	YES	–	–	–	–	–
J2	A	–	YES	–	–	YES	YES	–	–	–
	B	YES	–	YES	YES	–	–	–	–	–
SW2	1	–	–	–	–	–	–	–	ON	–
	2	–	–	–	–	–	–	ON	–	–
	3	–	–	ON	–	ON	–	–	–	ON
	4	–	–	–	ON	–	ON	–	–	ON
Address 0030		YES	YES	YES	YES	YES	YES	–	–	–

The ROM E signal can be output under nine conditions.

Case 1: When ROM 0 (14B) in the expansion unit is selected

(1) Addresses 15, $\overline{14}$

(2) Bank 1 select (address 0030)

(3) Address 13 (when J2 = B)/or J2 = A

Case 2: When ROM 1 (13B) in the expansion unit is selected

(1) Address 15, $\overline{14}$ (when J1 = B)/or addresses $\overline{15}$, 14 (when J1 = A)

(2) Bank 1 select (address 0030)

(3) Address 13 (SW2-4 on)/or SW2-3 on

Case 3: When an address over 6000 in the expnasion unit's RAM is selected

(1) Addresses $\overline{15}$, 14

(2) Address $\overline{13}$ (SW2-2 on)/or address $\overline{13}$ (SW2-3, SW2-4 on), or SW2-1 on

4.3.4 Interface

- The data buses have IC12A (tri-state output), which switches data bus direction with read and write signals.

  If the $\overline{\text{ROM E}}$ signal is high at the E (enable) signal timing, data bus direction is switched by R/W signal timing.

(IC12A H245)

Read	A	←	B
Write	A	→	B

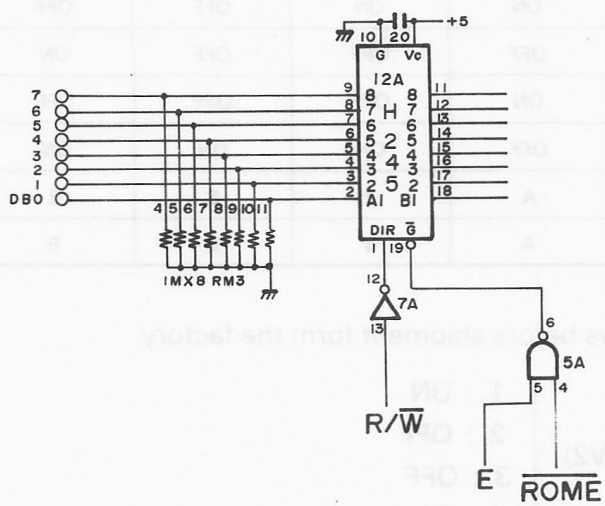

Fig. 4-33

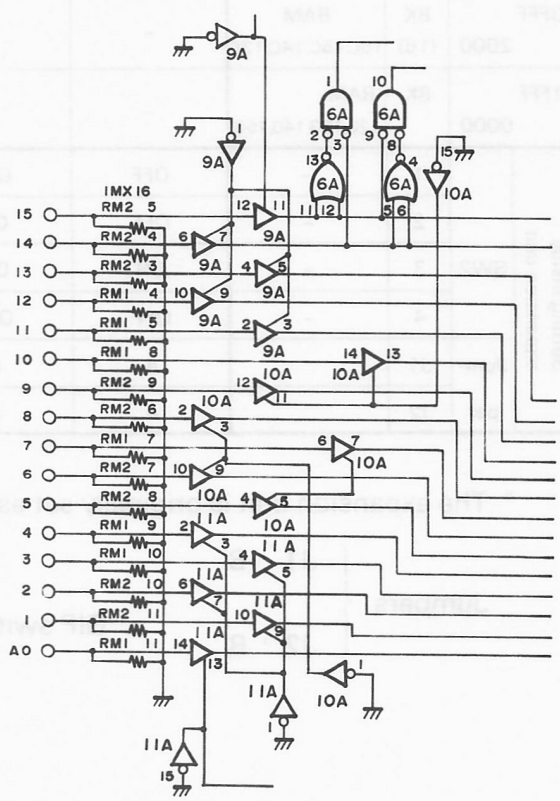

4-34

- Address buses

  Address buses output addresses to each element via bus drivers IC9A, IC10A, and IC11A, which are connected so that each gate may be normally on. Thus, these ICs are immediately ready for operation when a +5V is supplied as power is turned on.

4.3.5 Jumper (J1/J2) and DIP Switch (SW1/2) Setting

- Part or all of the standard equipment of 16k bytes of RAMs can be ignored or replaced with ROMs by reconnecting the jumpers or setting DIP switches. Therefore, the expansion memory area can be used as shown in the table below without changing the standard equipment of 16k bytes of RAMs in the expansion unit.

Address		Standard	ROM/RAM combination in expansion unit					
			16KB ROM × 2	16KB ROM × 2 2KB RAM × 4	16KB ROM × 1 2KB RAM × 8	8KB ROM × 2 2KB RAM × 8	8KB ROM × 2	8KB ROM × 2 2KB RAM × 4
FFFF E000	8K (64)	ROM (MONITOR) 15E	–	–	–	–	–	–
DFFF C000	8K (56)	ROM (UTILITY) 14E	–	–	–	–	–	–
BFFF A000	8K (48)	ROM (BASIC) 13E	ROM 0 (14B)	ROM0 (14B)	ROM 0 (14B)	ROM 0 (14B)	ROM 0 (14B)	ROM0 (14B)
9FFF 8000	8K (40)	ROM (BASIC) 12E				ROM 1 (13B)	ROM 1 (13B)	ROM 1 (13)
7FFF 6000	8K (32)	(Optional ROM)	ROM 1 (13B)	ROM 1 (13B)	RAM (11B,10B,6B,7B)	RAM (11B,10B,6B,7B)		
5FFF 4000	8K (24)			RAM (1B,2B,4B,8B)	RAM (1B,2B,4B,8B)	RAM (1B,2B,4B,8B)		RAM (1B,2B,4B,8B)
3FFF 2000	8K (16)	RAM 16C,15C,14C,13C	–	–	–	–	–	–
1FFF 0000	8K	RAM 12G,13G,14G,15G	–	–	–	–	–	–
Setting inside expansion unit SW2	1	–	OFF	OFF	ON	ON	OFF	OFF
	2	–	OFF	ON	OFF	OFF	OFF	ON
	3	–	ON	ON	ON	OFF	OFF	OFF
	4	–	OFF	OFF	OFF	ON	ON	ON
Jumper	J1		A	A	A	B	B	B
	J2		A	A	A	B	B	B

* The expansion unit is originally set as follows before shipment form the factory.

Jumpers { J1 : B ; J2 : B }

DIP switch (SW2) { 1 : ON ; 2 : OFF ; 3 : OFF ; 4 : ON }

- SWTCH 1 (SW1) turns on and off the Vc voltage line through which Vc voltage is supplied from the HX-20. The Vc voltage line carries a voltage of approximately +5V when power is on, and drives the elements connected to the Vc line.
  The Vc voltage line also outputs a voltage of approximately +3V when power is off so that it may also be used for memory backup. The eight RAMs and IC1A in the expansion unit use this Vc voltage, which protects the data stored in the RAMs, and controls the RAM CE2 signal and reset signal.
  * Be sure to set this switch to the ON position before use.

4.4 Display Controller

The display controller is connected to the HX-20 with a serial interface. Displayed data and control commands are serially transferred. Transferred data are converted into parallel data, and the commands are stored in the RAM (stack area) of the CPU and the data in the V-RAM. Then, the data stored in the V-RAM are read out by VDG (video display generator), which controls the display and outputs the data to the RF modulator. As a result, the display controller outputs composite or RF display signals to show them on the screen.

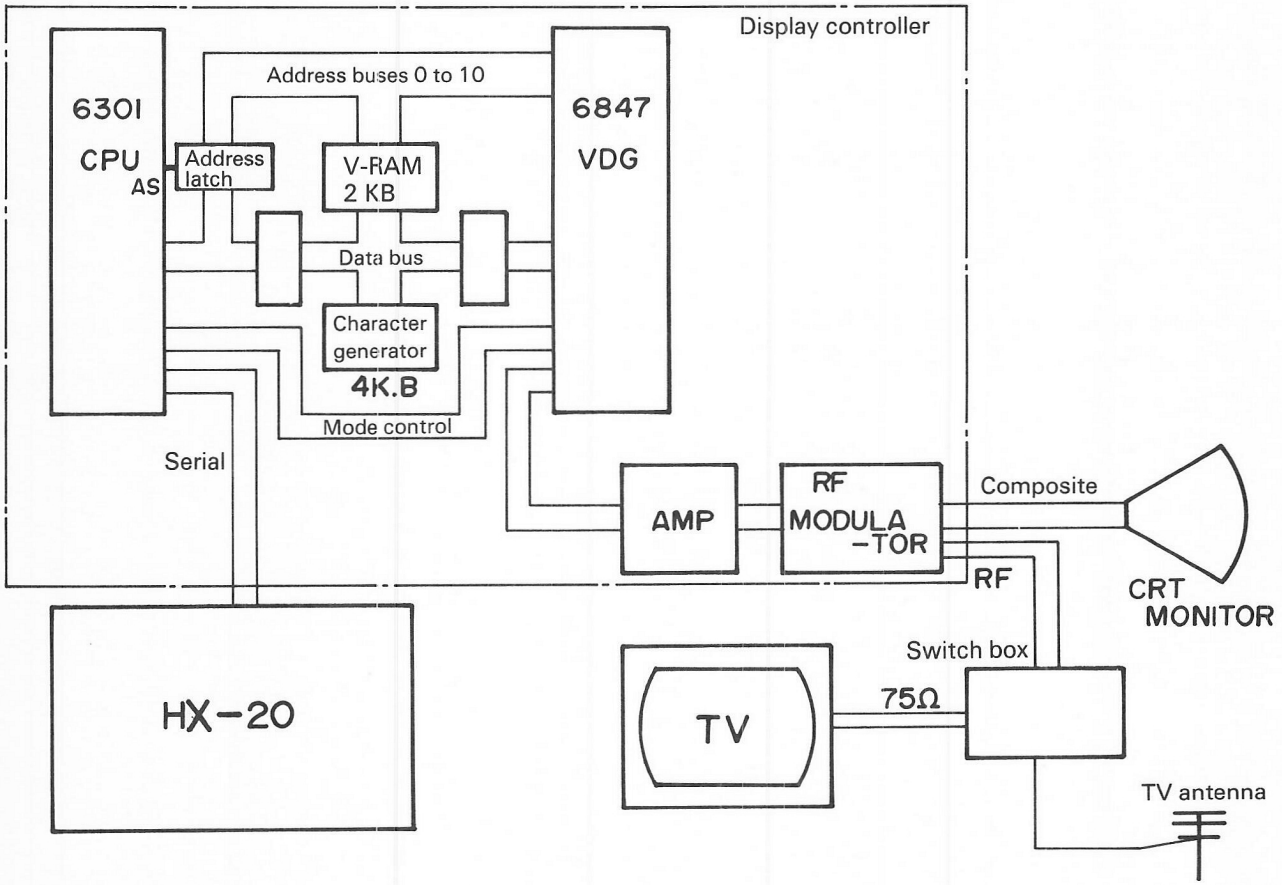

Fig. 4-35

Note: RF modulator output impedance is 75 ohms so that converter (75 ohms to 300 ohms) may be necessary when connecting with a monitor or a TV set.

4.4.1 Display Modes

● The main display modes are the text mode (alphanumeric mode) and the graphic mode. This equipement uses the three modes shown below.

Mode	Input terminal									Display		Color		
	$\overline{MS}$	$\overline{A}$/G	$\overline{A}$/S	$\overline{INT}$/EXT	GM2	GM1	GM0	CSS	INV	Mode	Description	Character	Background	Border
External alphanumeric mode	1	0	0	1	×	×	×	0	0	32 characters ×16 lines	8×12 dots/character	Green Black Orange Black	Black Green Black Orange	Black
									1					
								1	0					
									1					
128 × 96 graphic mode	1	1	×	×	0	1	1	0	×	128×96 picture elements	–	0: Black,1: Green 0: Black, 1 : White		Green White
								1						
128×64 color graphic mode	1	1	×	×	0	1	0	0	×	128×64 picture elements	–	* Refer to 4.4.3		Green White
								1						

● The screen display area is 256 dots maximum in the horizontal direction and 192 dots maximum in the vertical direction, but the usable area varies depending on the display modes.

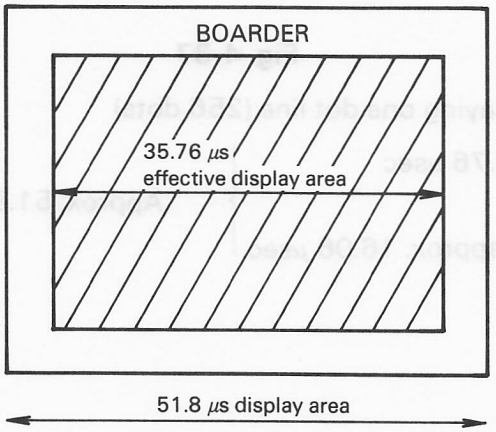

Fig. 4-36

● Display timing

From a system clock of 3.5795 MHz, a dot clock twice in period (about 139.7 nsec) is generated in VDG6847 (2C), and the dots of this clock timing are displayed.

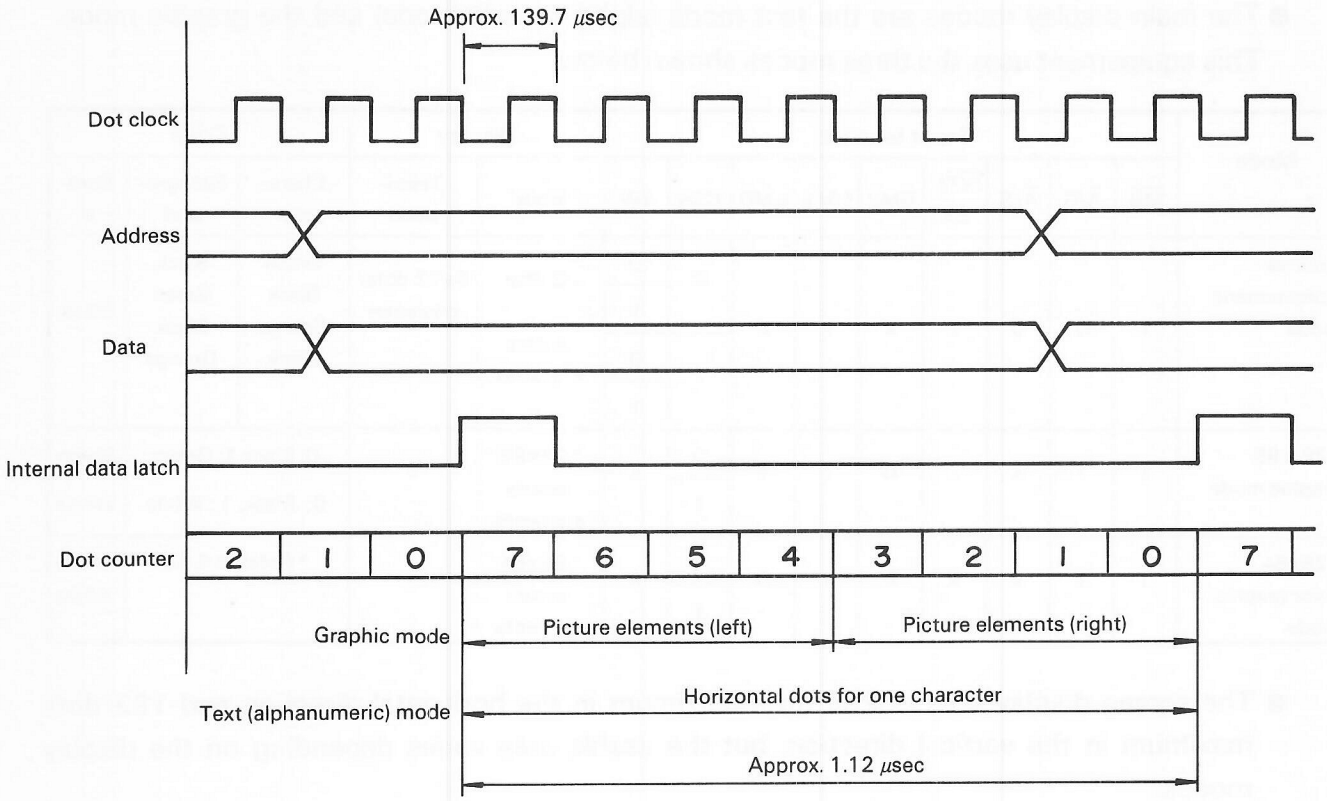

Fig. 4-37

1. Time required for displaying one dot line (256 dots)

139.7 nsec × 256 = 35.76 μsec

Boarder sweep time = approx. 16.06 μsec

} Approx. 51.8 μsec

4.4.2 Text Mode

In the text mode, 32 characters × 16 lines can be displayed, that is, a maximum of 512 characters can be shown on the screen.

Displayed data are stored in ASCII code in the V-RAM so, when displaying the data on the screen, display patterns are generated by the built-in character generator.

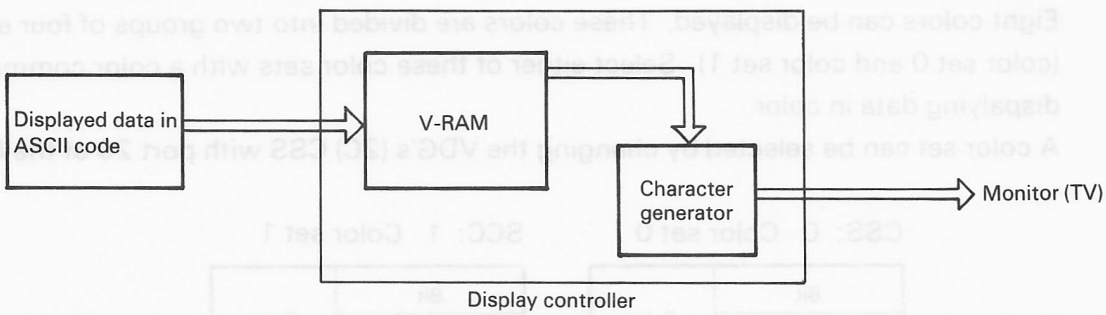

Fig. 4-38

One character is composed of a font of 8 (horizontal) × 12 (vertical) dots, but actually a font of 7 × 9 dots to for inter-character and inter-line spaces.

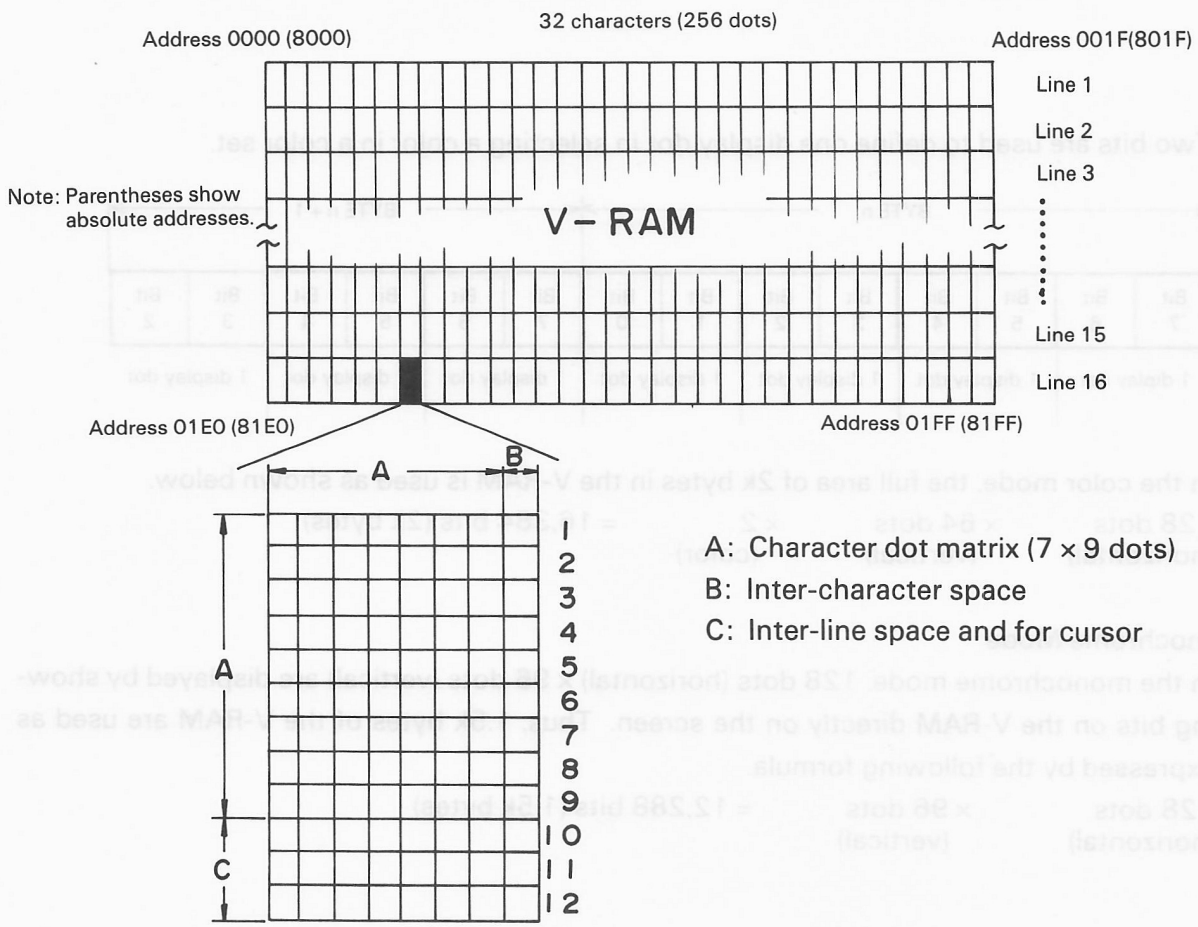

A: Character dot matrix (7 × 9 dots)
B: Inter-character space
C: Inter-line space and for cursor

Fig. 4-39

4.4.3 Graphic Mode

There are two kinds of graphic mode, that is, color and monochrome, and display patterns are written on the V-RAM.

Therefore, the character generator is not used but the data sotred in the V-RAM are directly output to the screen in the graphic mode.

(Color Mode)

Eight colors can be displayed. These colors are divided into two groups of four each colors (color set 0 and color set 1). Select either of these color sets with a color command before dispalying data in color.

A color set can be selected by changing the VDG's (2C) CSS with port 20 of the CPU.

* Color selection

CSS: 0 Color set 0

Bit		Color
Higher	Lower	
0	0	Green
0	1	Yellow
1	0	Blue
1	1	Red

SCC: 1 Color set 1

Bit		Color
Higher	Lower	
0	0	White
0	1	Cyan
1	0	Magenta
1	1	Orange

Two bits are used to define one display dot in selecting a color in a color set.

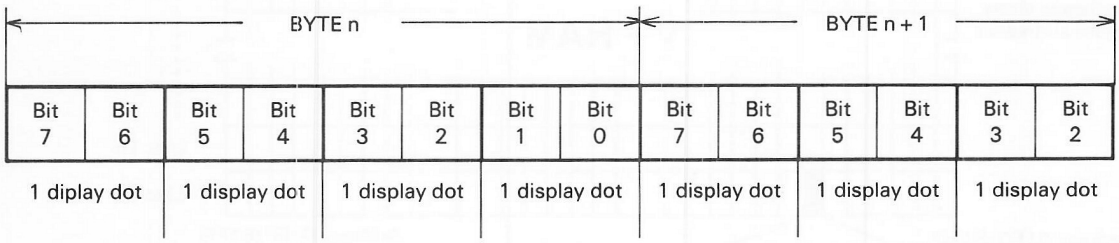

In the color mode, the full area of 2k bytes in the V-RAM is used as shown below.

128 dots (horizontal) × 64 dots (vertical) × 2 (color) = 16,384 bits (2k bytes)

Monochrome Mode

In the monochrome mode, 128 dots (horizontal) × 96 dots (vertical) are displayed by showing bits on the V-RAM directly on the screen. Thus, 1.5k bytes of the V-RAM are used as expressed by the following formula.

128 dots (horizontal) × 96 dots (vertical) = 12,288 bits (1.5k bytes)

4.4.4 Operation Mode (Memory Map)

The main CPU's operation mode depends on hardware connection at ports 20, 21 and 22. The display controller hardware is as shown below. Here, an output from IC7A is input to port 22 at high level because the port state upon completion of resetting is latched to the mode control register. Thus, the main CPU operates in mode 6 (multiplexed partial decode).

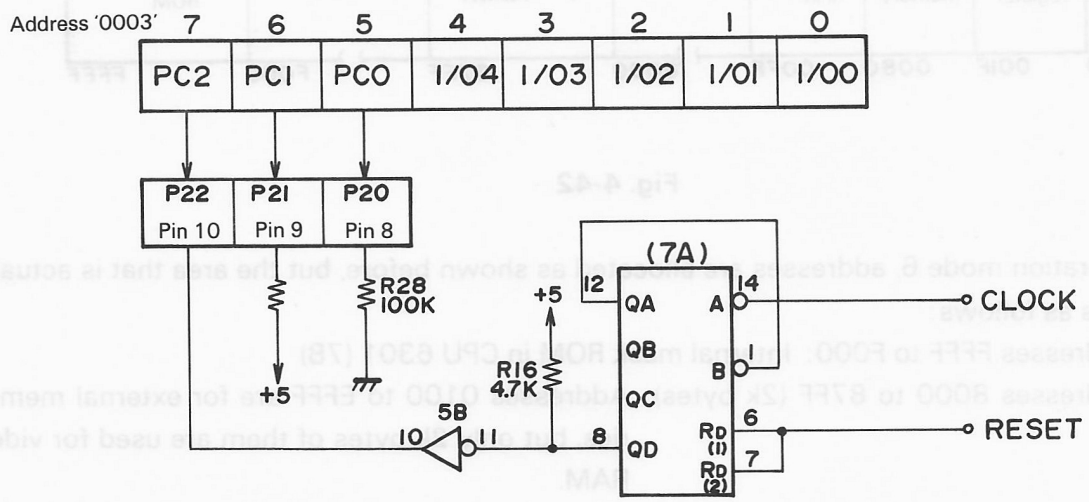

Fig. 4-40

After power is turned on, the P22 is used as an input terminal for external clocks. As shown below, an external clock is counted down to 1/12 by IC7A, and the resultant clock is supplied to the CPU. This clock is used for generating a serial interface bit rate.
The clock has a frequency of 3.6864 MHz, which is divided by 12 as an external clock to approximately 307 kHz. As in the case of the HX-20, data can be transferred at 38.4 kbps.

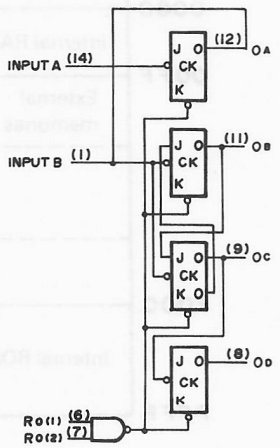

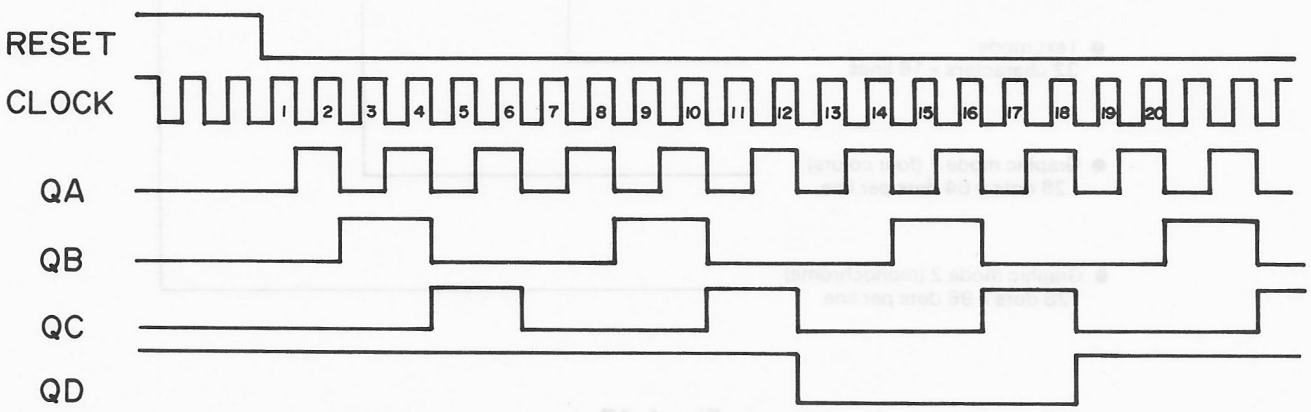

Fig. 4-41

(Memory Map)

In operation mode 6, the memories are allocated as shown below.

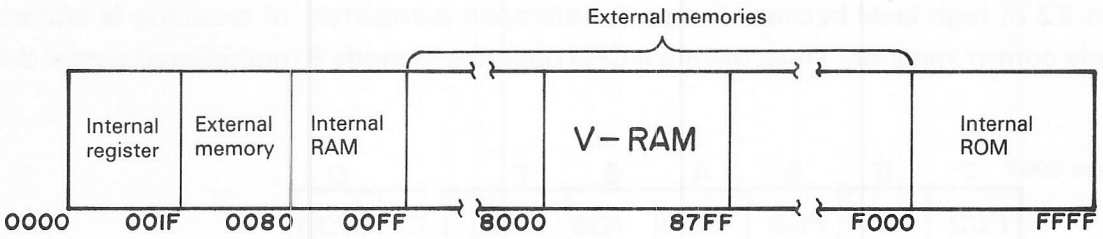

Fig. 4-42

In operation mode 6, addresses are allocated as shown before, but the area that is actually used is as follows:

- Addresses FFFF to F000: Internal mask ROM in CPU 6301 (7B)
- Addresses 8000 to 87FF (2k bytes): Addresses 0100 to EFFF are for external memories, but only 2k bytes of them are used for video RAM.

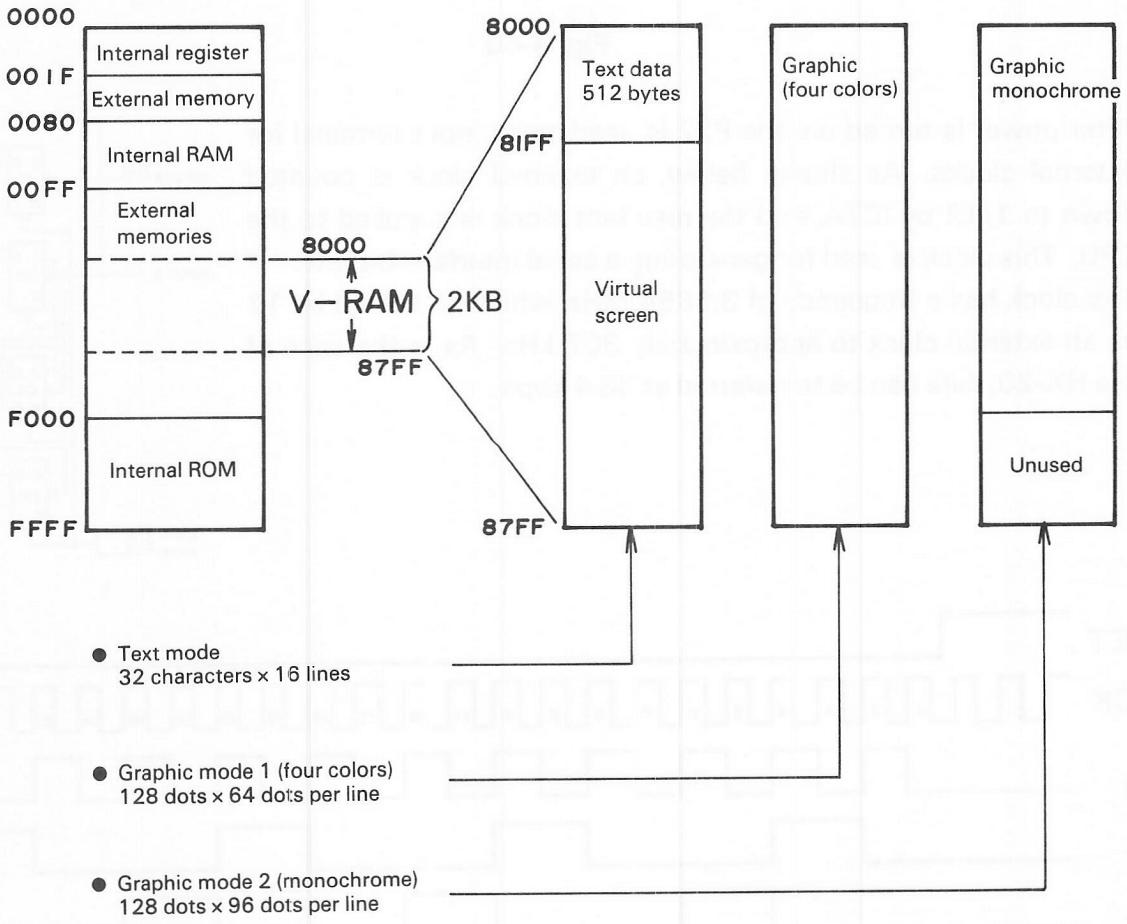

Fig. 4-43

4.4.5 Power Supply

The power supply consists of a filter circuit, transformer, and DC regulator as shown below, and generates four kinds of voltages.

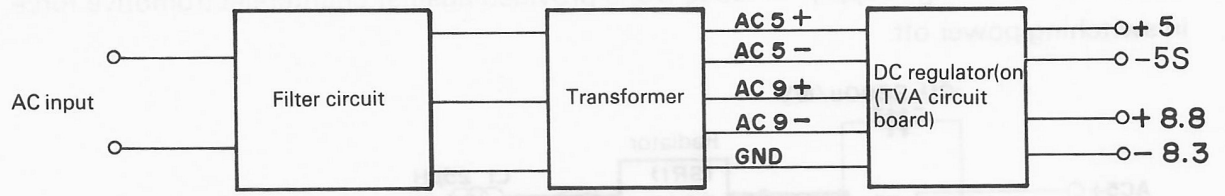

Fig. 4-44

(1) Filter circuit

The filter circuit has fuse F1 for protection from overcurrent (800 mA) and a circuit for eliminating AC line noise, and employs a π type filter as shown below.

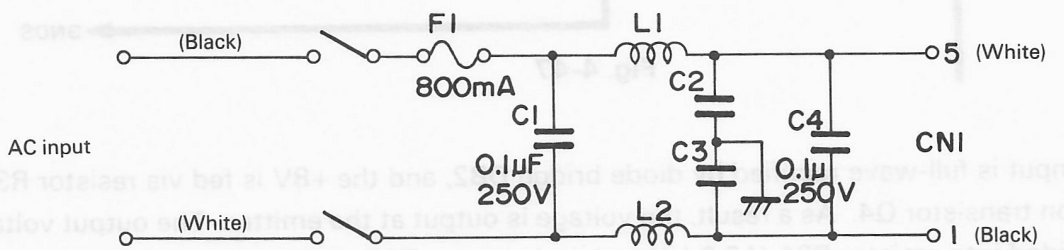

Fig. 4-45 Filter Circuit

(2) Transformer

The transformer genertes a +5V AC output and a +8V AC output from the AC input.

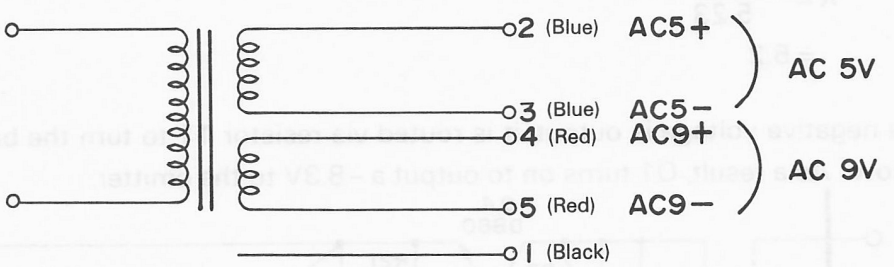

Fig. 4-46

(3) There are two kinds of DC regulator, that is, one is for +5V and the other for +8V, and generates the following voltage.

Voltage	Range	Use
+5V	4.8 to 5.2V	Circuit voltage
+5S	4.8 to 5.2V	Bias voltage for video display generator (2C)
+8.8V	8.0 to 10.0V	Voltage for serial (RS-232C level)
–8.3V	–8.0 to –10.0V	Voltage for serial (RS-232C level)
–5V	–4.8 to –5.2V	Chroma oscillation

(a) The input is full-wave rectified by diode bridge DB1 and smoothed by electrolytic capacitor C11. A +5V is generated from this smoothed DC voltage by3-terminal regulator (7805).

A smoothing capacitor C10 and a filter inductance L1 are provided on the output end to assure steady voltage supply. A diode D6 is provided against counterelectromotive force in switching power off.

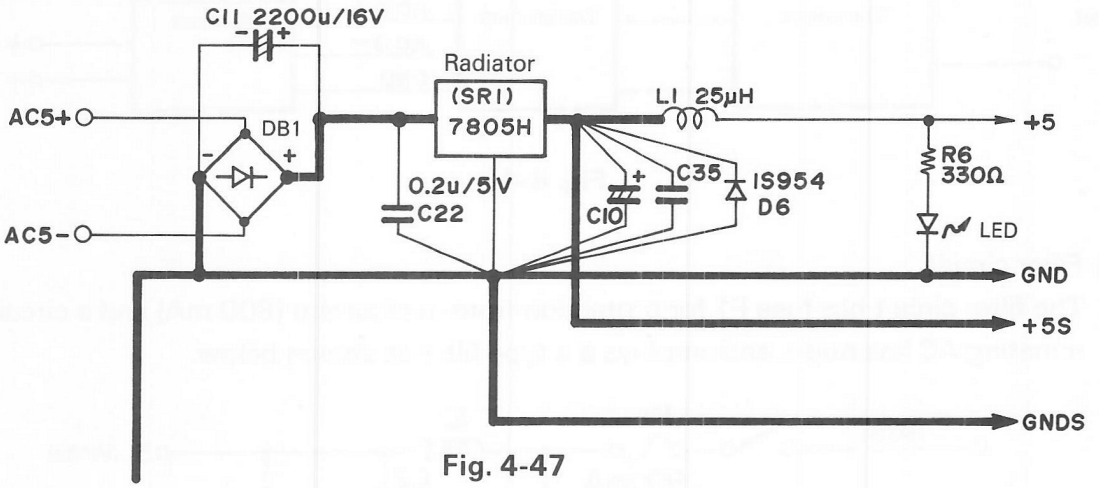

Fig. 4-47

(b) +8V

The input is full-wave rectified by diode bridge DB2, and the +8V is fed via resistor R3 to turn on transistor Q4. As a result, the voltage is output at the emitter. The output voltage is divided into resistor R21 (13.0 kohms) and resistor R14 (5.23 kohms), and fed back to Pin 8 of TL431.

The gate of TL431 operates at 1.5V so that, when the output voltage rises above about 5.2V, SCR turns on to cut off transistor Q4. A constant output voltage is maintained by repeating this process.

$$5.23k \times X = (5.23k + 10k) \times 1.5$$

$$X = \frac{27.345}{5.23}$$

$$\doteqdot 5.2$$

(c) −8V

When a negative voltage is output, it is routed via resistor 11 to turn the base of transistor Q1 low. As a result, Q1 turns on to output a −8.3V to the emitter.

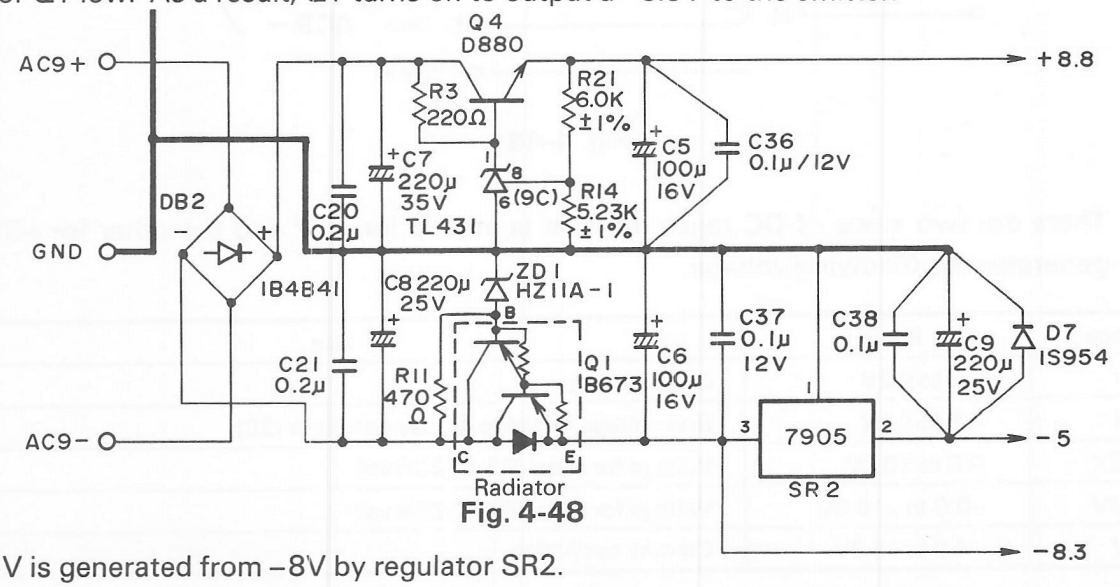

Fig. 4-48

−5V is generated from −8V by regulator SR2.

4.4.6 Oscillation Circuit

The 3.6864 MHz clock output by crystal oscillator CR1 is amplified by IC8A, and is routed via IC5A to the clock input terminal on the main CPU.

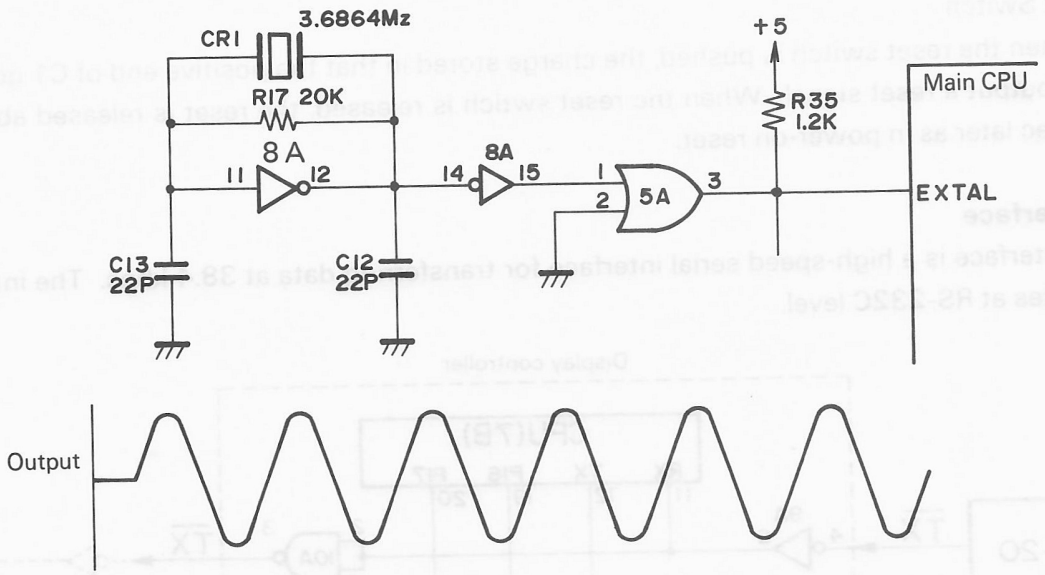

Fig. 4-49

The main CPU has a 1/4 dividing circuit to divide the system clock to approximately 0.922 MHz (1.09 μsec period).

4.4.7 Reset Circuit

A reset signal is supplied to CPU 6301 (7B) only when power is turned on or when the reset switch is pushed.

Power-On Reset

When power is switched on, the circuit voltage +5V is supplied so that a charging current flows via resistor R23 to capacitor C1. Thus, Pin 9 of IC3B remains low for about 30 msec after power is switched on.

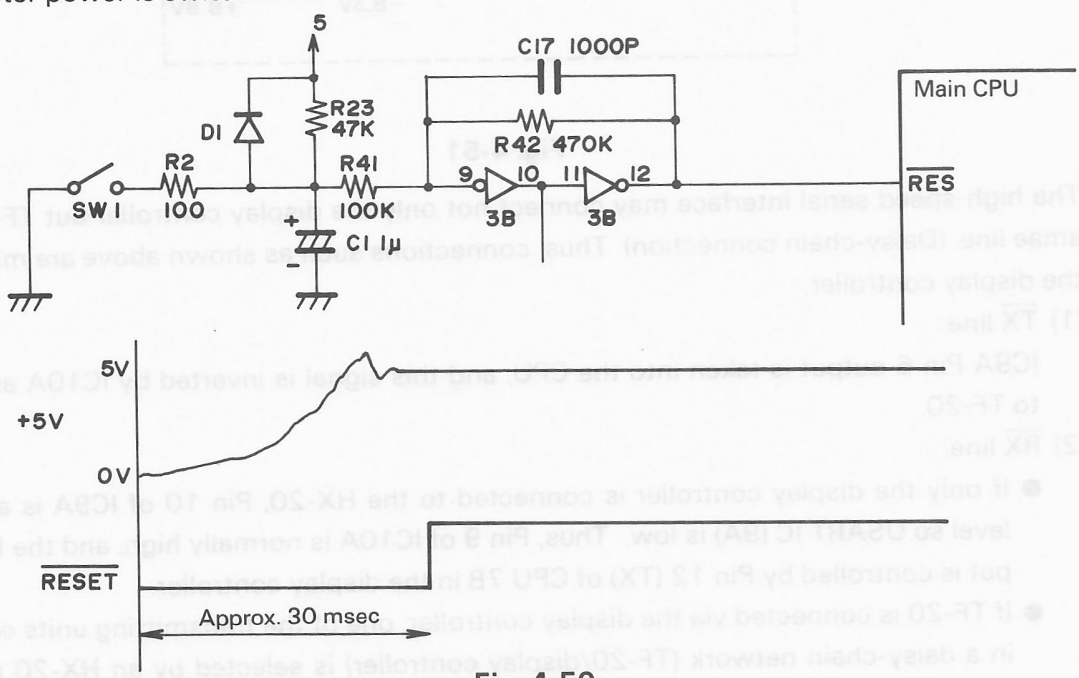

Fig. 4-50

The charging current flowing to capacitor C1 generates a delay time (of about 30 msec) for generating a reset signal.

When capacitor C1 has been charged, Pin 9 of IC3B goes high to stop reset operation.

Reset Switch

When the reset switch is pushed, the charge stored in that the positive end of C1 goes low to output a reset signal. When the reset swtich is released, the reset is released about 30 msec later as in power-on reset.

4.4.8 Interface

The interface is a high-speed serial interface for transferring data at 38.4 kbps. The interface operates at RS-232C level.

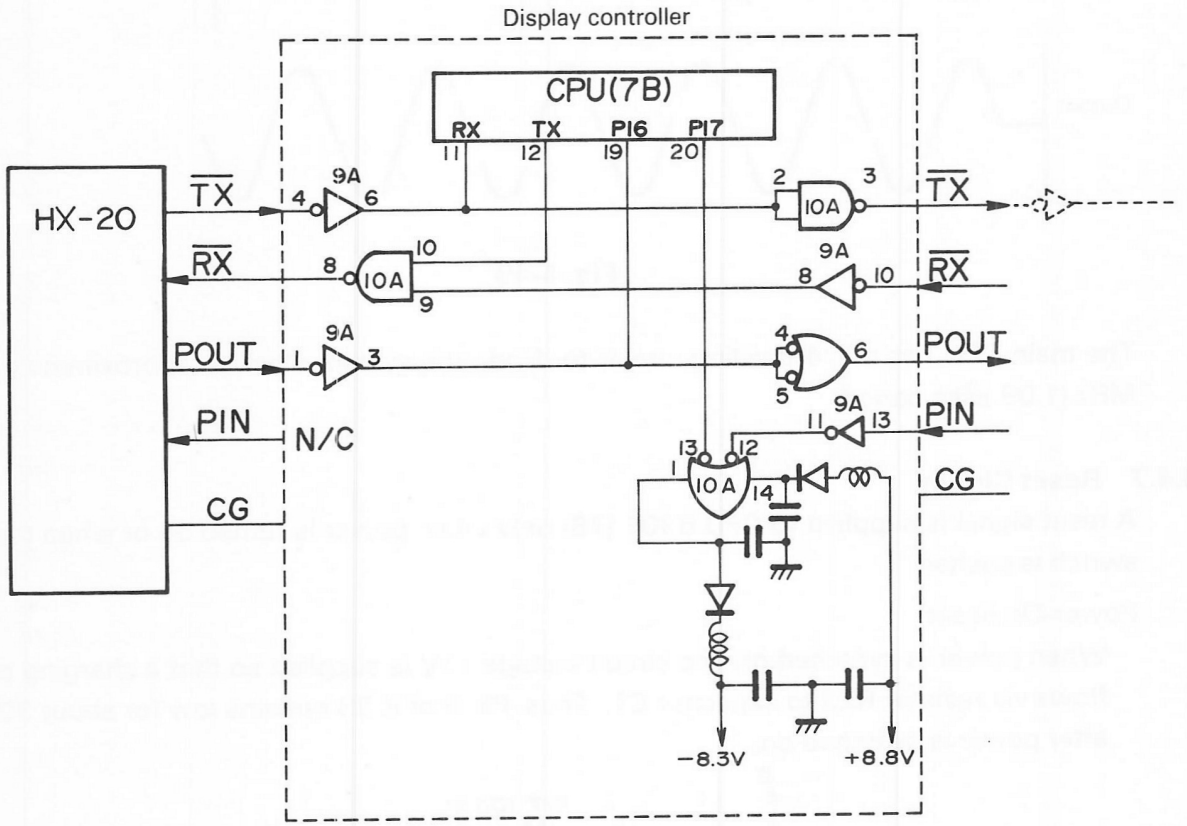

Fig. 4-51

The high-speed serial interface may connect not only the display controller but TF-20 to the smae line. (Daisy-chain connection) Thus, connections such as shown above are made inside the display controller.

(1) $\overline{TX}$ line:

IC9A Pin 6 output is taken into the CPU, and this signal is inverted by IC10A and output to TF-20.

(2) $\overline{RX}$ line:

- If only the display controller is connected to the HX-20, Pin 10 of IC9A is at floating level so USART IC (9A) is low. Thus, Pin 9 of IC10A is normally high, and the Pin 8 output is controlled by Pin 12 (TX) of CPU 7B in the display controller.
- If TF-20 is connected via the display controller, one of the transmitting units connected in a daisy-chain network (TF-20/display controller) is selected by an HX-20 protocol.

Thus, only one of the daisy-chain-connected units can transmit. The units not in the transmitting mode send a low level signal to the $\overline{RX}$ output line.

If the display controller is to send, Pin 10 of IC9A is low so that Pin 9 of IC10 goes high, and an input (TX) to Pin 10 of IC10A enables data to be transferred to the $\overline{RX}$ output line.

(3) P OUT line: IC9A Pin 3 output is taken into the CPU, and this signal is inverted by Pin 6 of IC10, and output to TF-20.

(4) P IN line: The output end of the line is open (N/C).

The input end of the line is connected via IC9A to IC10A, but the output of IC10A is open (N/C).

* P OUT and P IN signals are not actually used.

- Received serial data are converted into parallel data, of which the commands are stored in the CPU and the data in the V-RAM. When transferring data to the HX-20, the data stored in the V-RAM are read out, converted from parallel to serial data in the CPU, and output to the interface.

4.4.9 RAM Control

The video RAM (V-RAM) has 2k bytes of absolute addresses 8000 to 87FF. In RAM addressing, therefore, it is necessary to select not only relative addresses 000 to 7FF of the 2k-byte V-RAM by lines A0 to A10 but also address 8xxx by A15.

Write to V-RAM

First, by outputting RAM addresses (8000 to 87FF) to be stored at write timing, lower addresses are stored in the address latch at the rise timing of an AS signal, and the data bus gate (5C) is set in the output direction (CPU → RAM) by a $\overline{W}$ signal.

Then, the output of Pin 5 of IC4B goes low at the fall of the AS signal so that the lower addresses that have been stored are output from the address latch (6B) to an address bus. At the same time, the data bus gate (5C) turns on to keep the data bus in an output state (CPU → RAM) until the next E signal goes high. IC6C which controls so that selection of V-RAM addresses if accomplished perfectly.

Under this condition, the main CPU outputs one byte of data to a data bus so that the data can be stored in the selected RAM addresses.

Read from V-RAM

The $\overline{R}$/W signal goes low so that the data bus gate (IC5C) is set in the input direction (RAM → CPU). As RAM (5D) sets $\overline{OE}$ (output enable) if it is AND'ed with an E signal, the data stored in the selected RAM addresses can be read out. Address control is the same as in write operation.

RAM Control Circuit

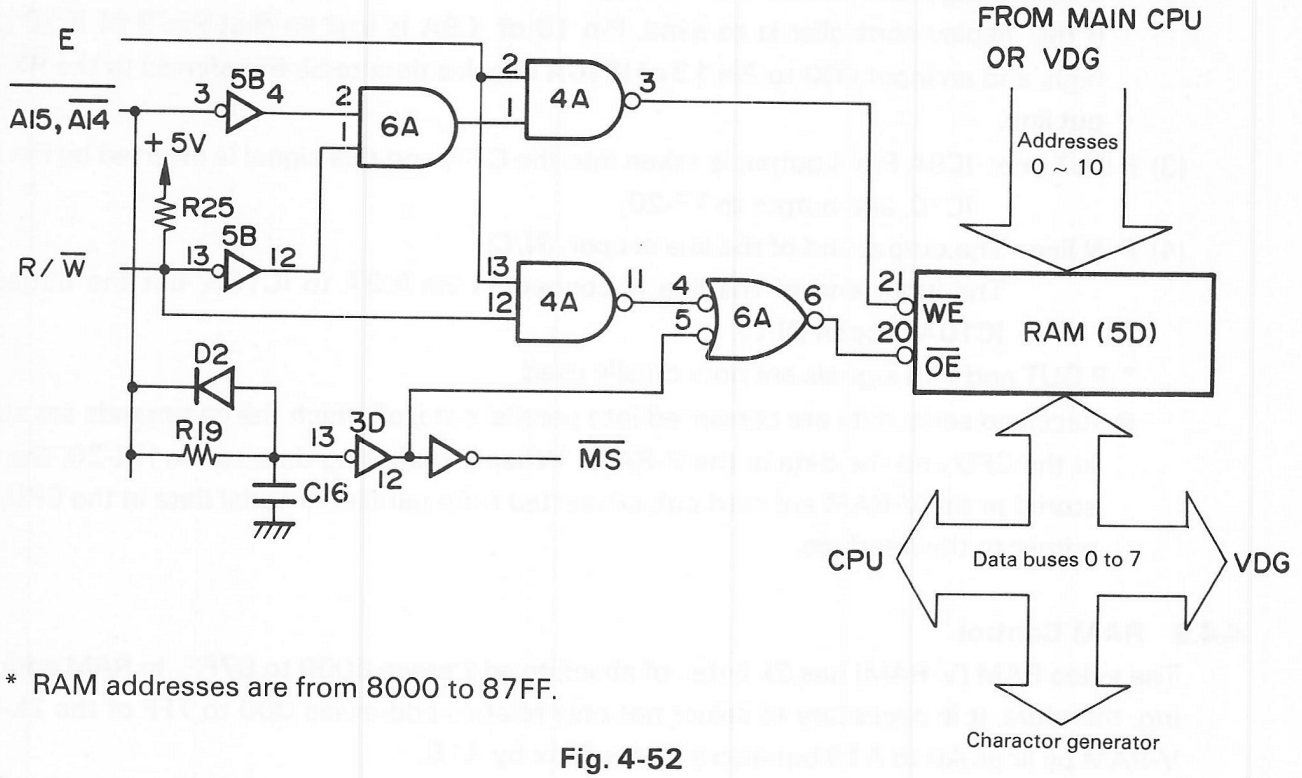

* RAM addresses are from 8000 to 87FF.

Fig. 4-52

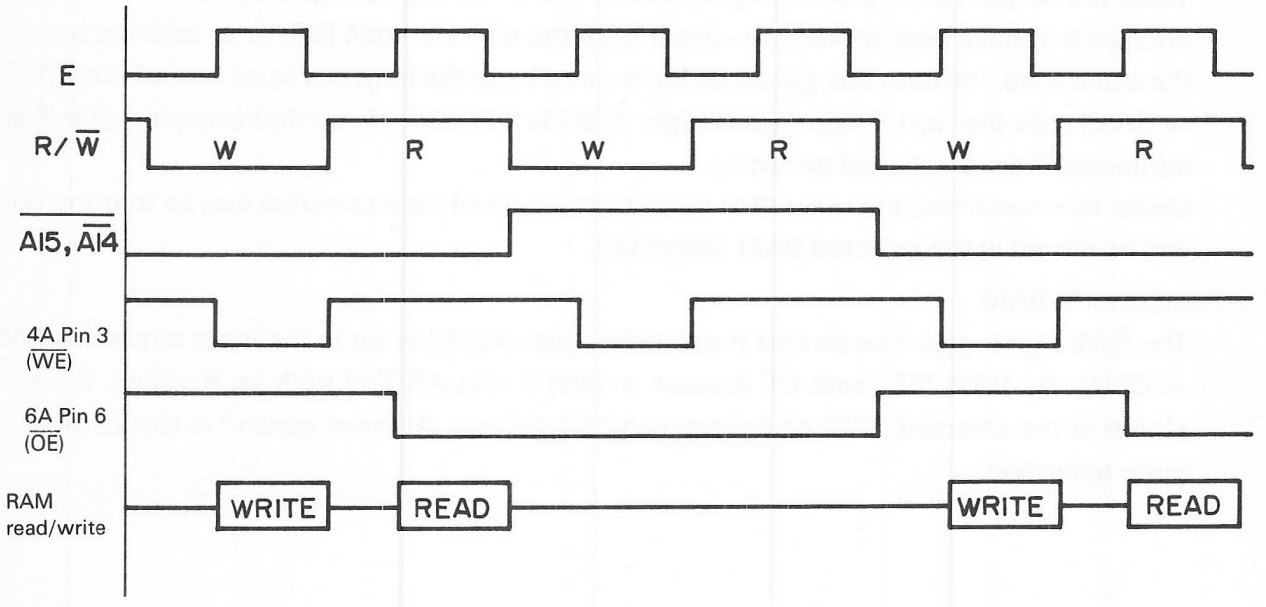

Fig. 4-53

4.4.10 Data Bus Control

IC5C and IC3C are located on the data buses to control the data lines. These ICs select a data direction for each operation. IC5C is a two-way gate, whose direction can be changed by an R/$\overline{W}$ signal. IC3C is a one-way gate, which is switched together with a character generator output by port 15 of the CPU.

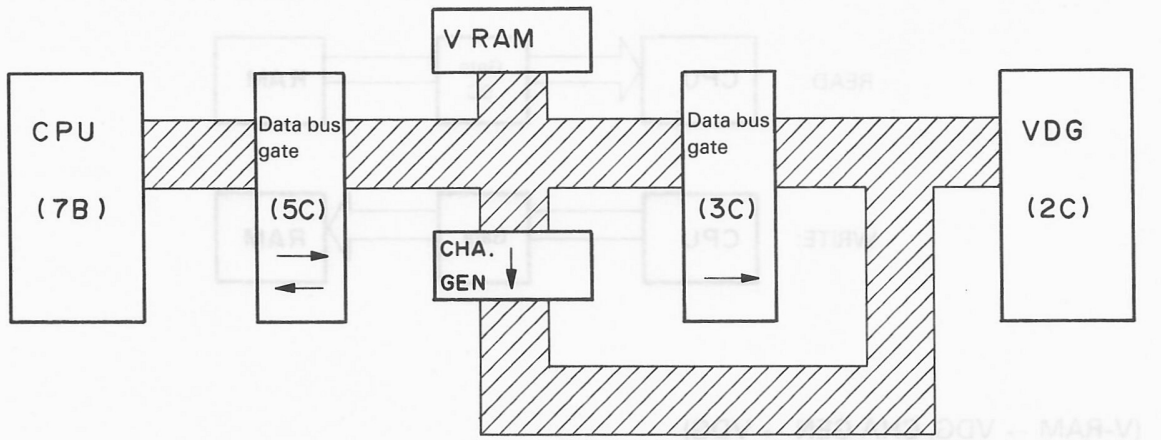

Fig. 4-53

There are four operations using data buses as mentioned below.

(1) V-RAM → CPU : Read from V-RAM
(2) CPU → V-RAM : Write to V-RAM
(3) V-RAM → VDG : Graphic display
(4) CHA. GEN → VDG : Text display

(V-RAM → CPU, CPU → V-RAM)

The data buses are controlled by an AND with addresses A15, A14, and E (enable) signal, and a data direction is selected by and R/$\overline{W}$ signal.

Addresses A15, $\overline{A14}$ mean that V-RAM will be selected, and signal A15, $\overline{A14}$ is hold at the rise of the AS signal. If signal A15, $\overline{A14}$ is output, that is, if absolute addresses 8000 to 87FF in V-RAM are selected, the Pin 5 output of IC4B goes low at the timing of the input (fall of the AS signal) to Pin 3 of IC4B.

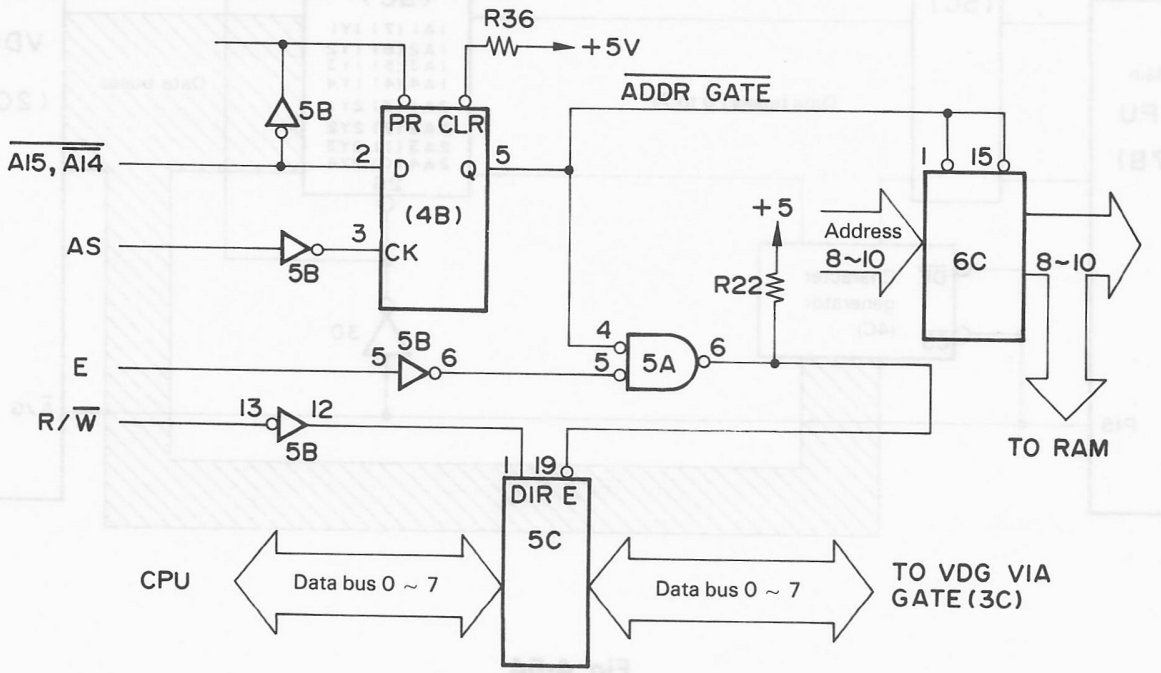

Fig. 4-54

When the IC4B Pin 5 output is set low, the gate of IC6C turns on to output A10 to A8 to an address bus, and supply to Pin 4 of IC5A. Thus, data bus gate IC5C is put into operating condition by an AND with an $\overline{E}$ singnal.

Under this condtion, the data bus gate's signal direction is switched by the R/$\overline{W}$ signal as shown below.

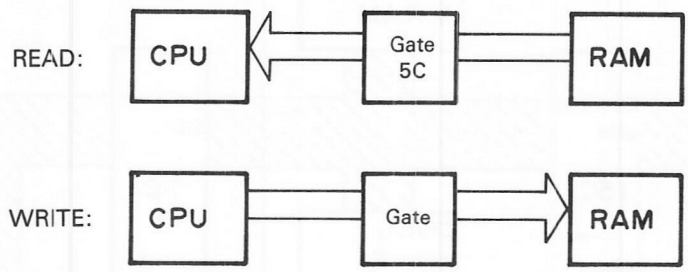

(V-RAM → VDG, CHA GEN → VDG)

Data input to IC2C (VDG) varies depending on the graphic mode and text mode. In the text mode, data output from the character generator (4C) are directly input so that the data bus gate of IC3C turns off. In this case, the data buses are disconnected from the CPU.

In the graphic mode, however, the character generator is not used, but data output from the V-RAM are directly displayed. Accordingly, port 15 of the CPU is used to stop character generatoir output, turn the gate of IC3C on, and take the data output from the V-RAM into IC2C (VDG).

As described above, the character generator and data bus gate are conrolled by port 15 of the CPU according to the display commands.

Port 15 High: Graphic mode
Low: Text mode

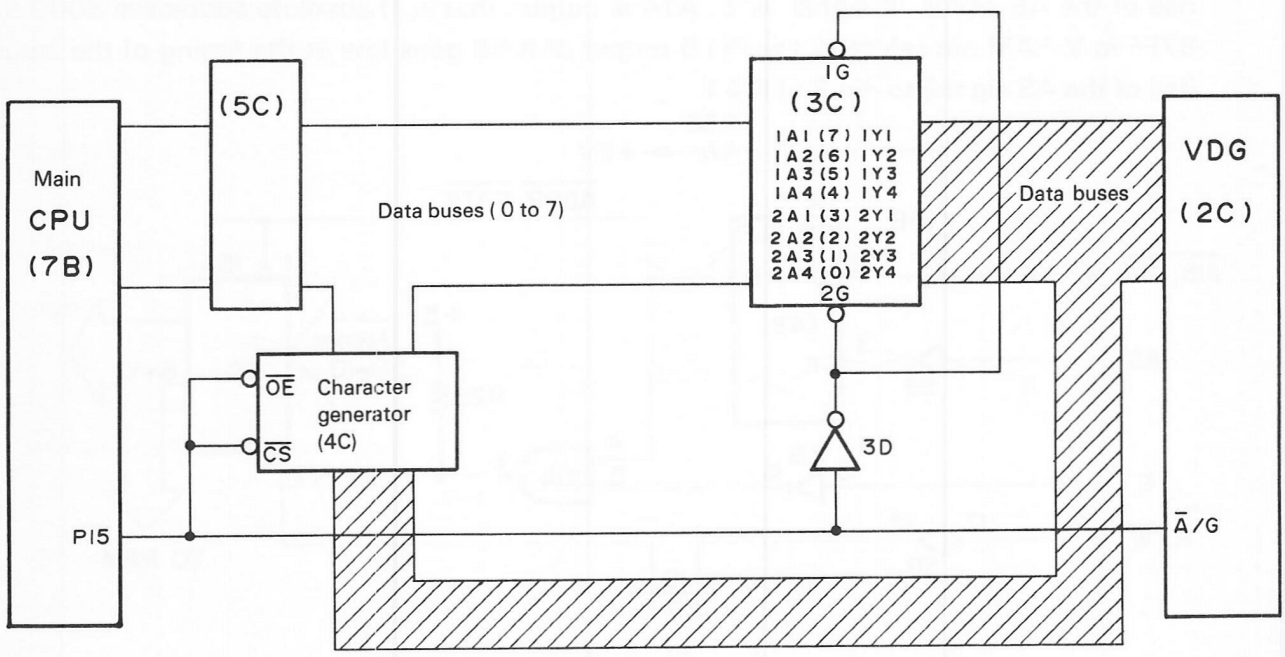

Fig. 4-54

4.4.11 Character Generators

Character generators are used in the text (alphanumeric) mode. The start address of a character generator corresponding to an ASCII code is selected by data buses D7 to D0 (which correspond to A11 to A4), and a character generator pattern corresponding to a display dot line is determined by an output from IC4D.

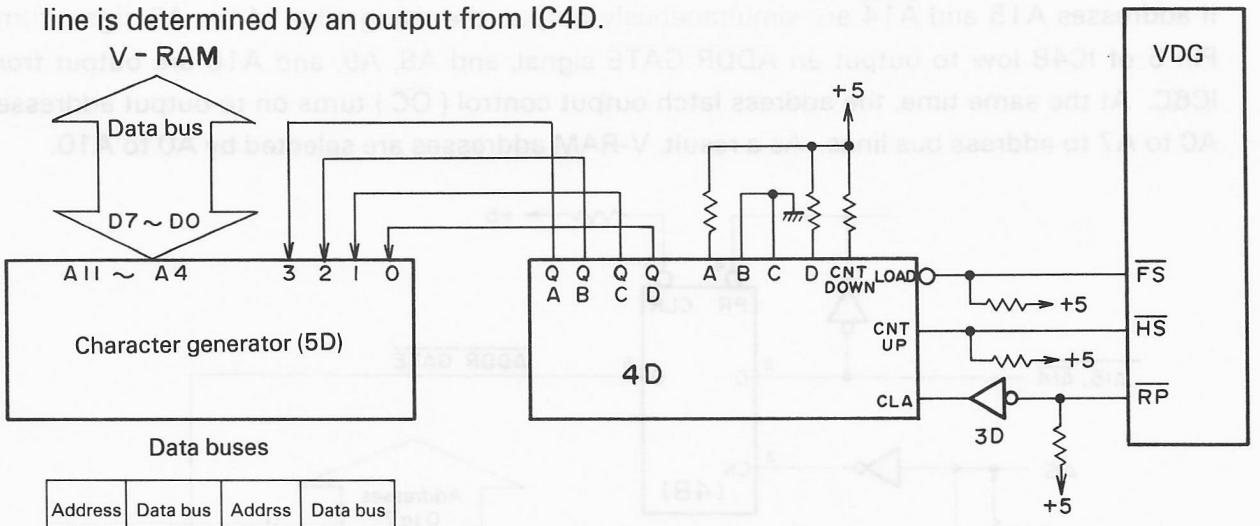

Data buses

Address	Data bus	Addrss	Data bus
11	DA7	7	DA3
10	DA6	6	DA2
9	DA5	5	DA1
8	DA4	4	DA0

* $\overline{FS}$ (field sync output): End of effective display area
$\overline{HS}$ (horizontal sync output): Horizontal sync signal
$\overline{RP}$ (Rope reset): Output when using external character generator ROM (5D)

Fig. 4-55

A signle-character generator consists of 16 bytes, but the number of bytes actually used for display is 12, including inter-line space.

This is due to character generator address selection, that is, to the fact that a system by which the start address of a character generator corresponding to ASCII code is selected by the CPU using addresses A11 to A4 is employed.

The data which have been read out are taken into the VDG, byte by byte, and displayed.

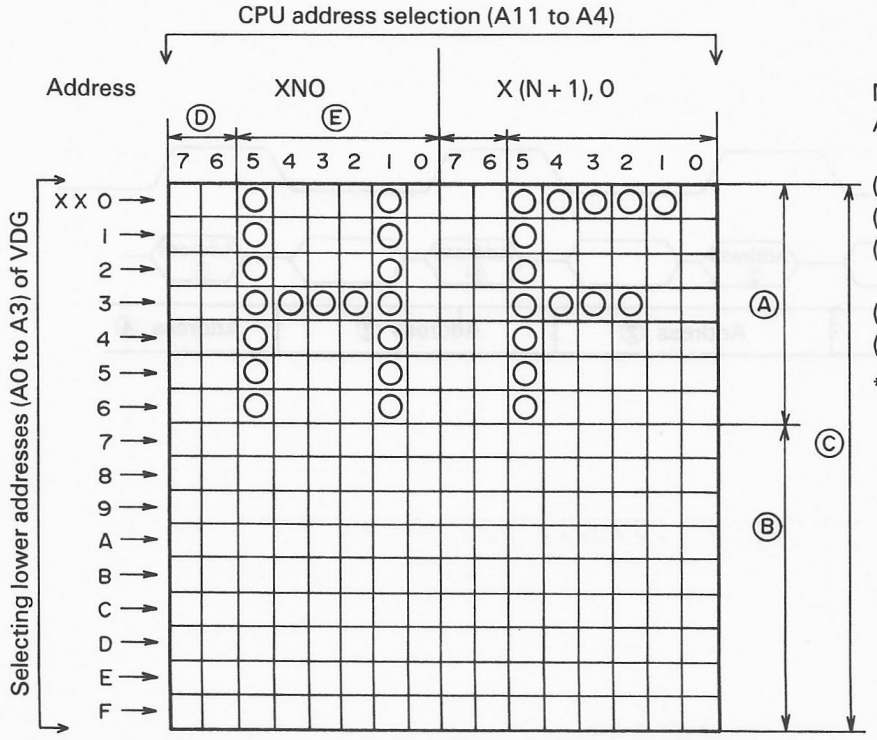

Note: Address XN is a character of ASCII code.

(A): Column dots acually displayed
(B): Space between lines
(C): Character generator addresses shared by characters
(D): Ignored. No function
(E): Row dots displaying 5 bits

* Bit 0 at the bottom is used for inter-line space.

Fig. 4-56

4.4.12 Address Latch

The address latch is used to hold lower addresses A0 to A7.

The lower addresses on address data buses are latched to IC6B at the rise of an AS (address strobe) signal (L → H) and are kept latched until the next AS signal is output.

If addresses A15 and $\overline{A14}$ are simultaneously output, the rising edge of the AS signal turns Pin 5 of IC4B low to output an $\overline{ADDR\ GATE}$ signal, and A8, A9, and A10 are output from IC6C. At the same time, the address latch output control ($\overline{OC}$) turns on to output addresses A0 to A7 to address bus lines. As a result, V-RAM addresses are selected by A0 to A10.

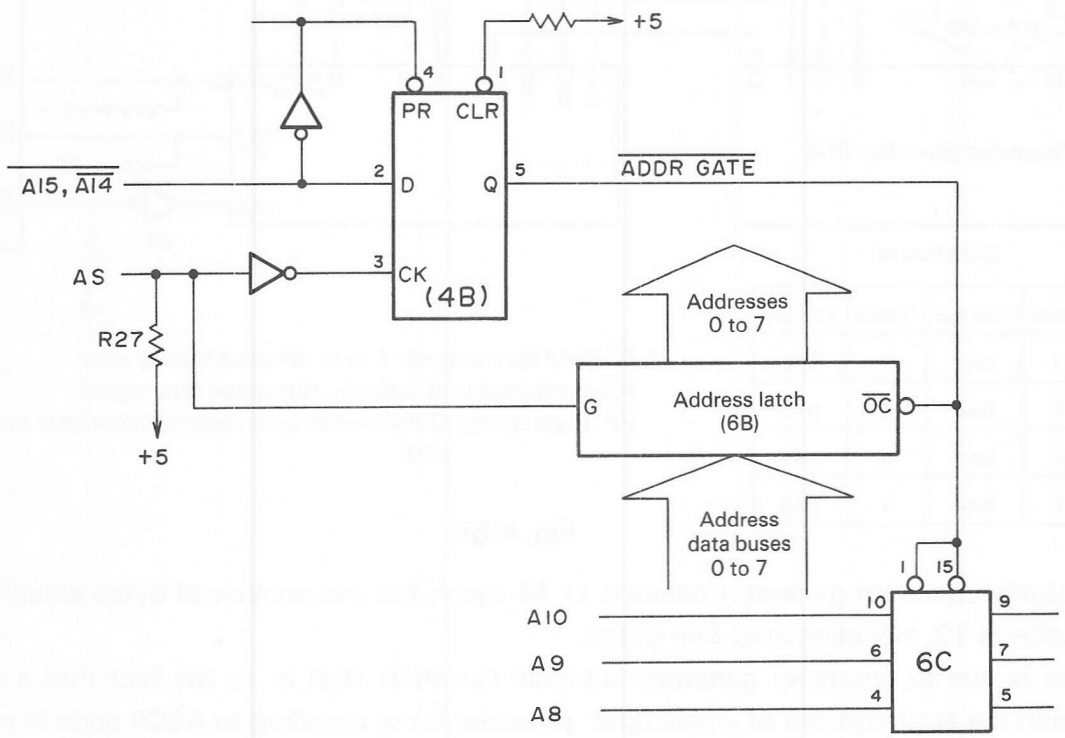

Fig. 4-57

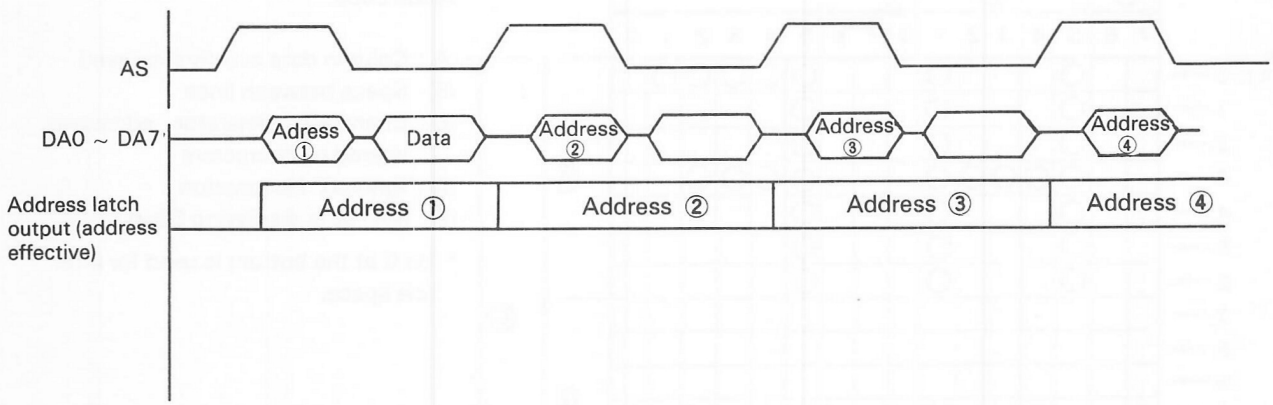

4.4.13 Modulator Circuit

IC1C is used for modulating purposes. The modulator circuit receives chroma bias, B-Y and R-Y signals from the VDG, and modulates them for color display. The relationship between colors and signals is shown in Fig. 4-62. CV1 is an oscillation frequency control for generating clocks of 3.57956 to 3.57952 MHz, but normally, it must not be turned.

IC1C has a video bias control volume VR1/2 on its output end, which may be used for output adjustment.

VR1 is used for bias adjustment, and VR2 for wave peak adjustment. Normally, these VRs must not be turned either. If it is absolutely necessary to adjust these VRs, observe the following instructions.

Step 1: Adjust burst signal to 3.0V with VR1.

Step 2: Adjust wave peak to 1.0V with VR2.

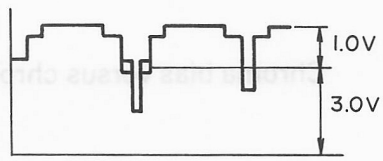

Fig. 4-59

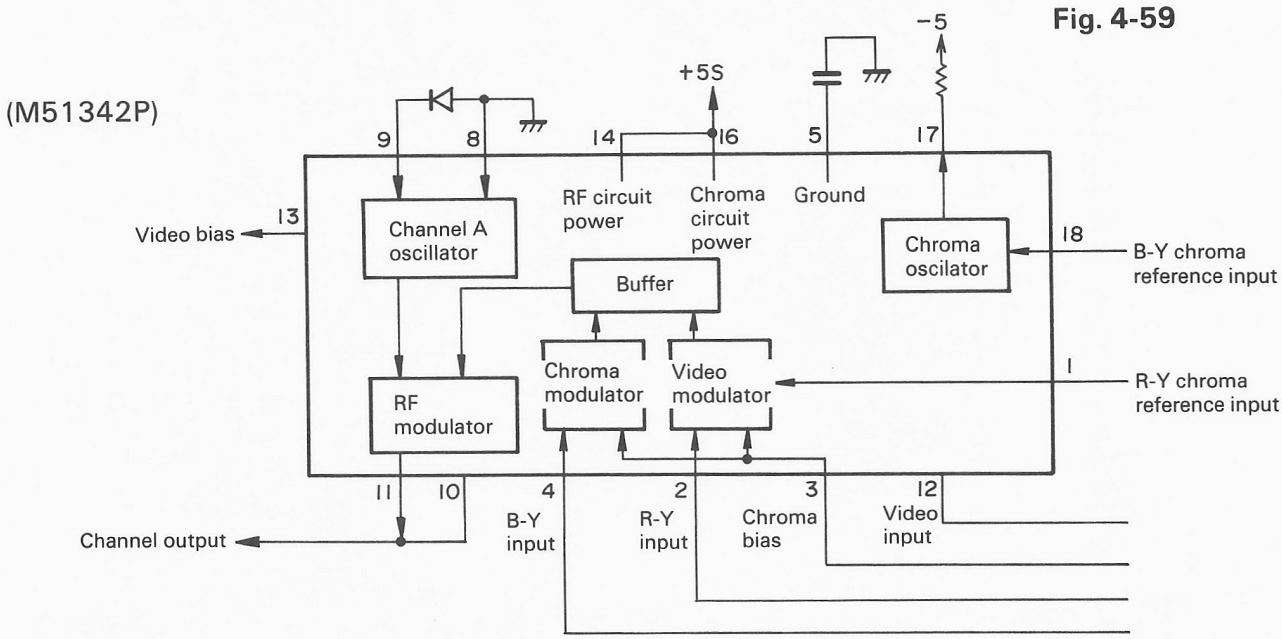

Fig. 4-60

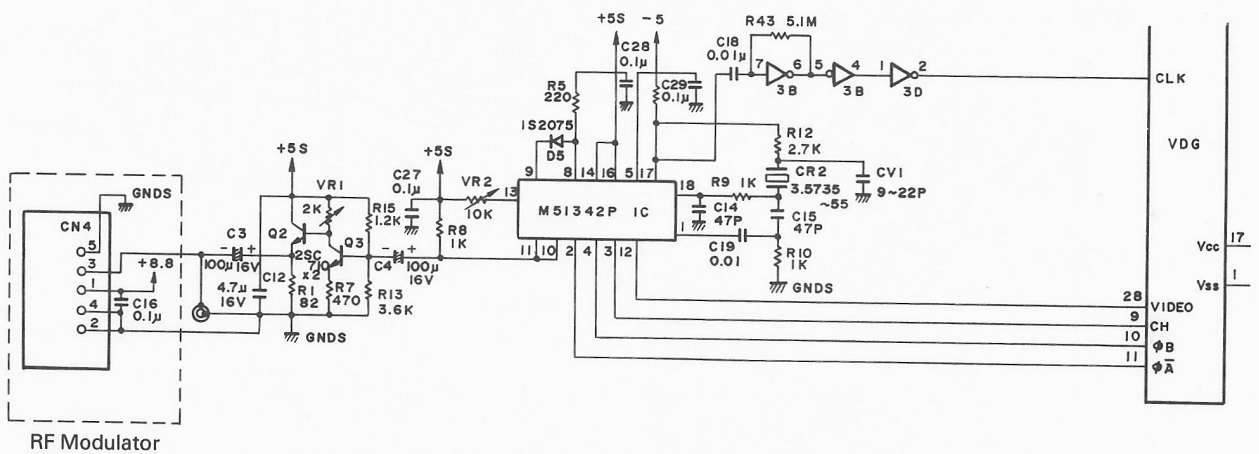

Fig. 4-61

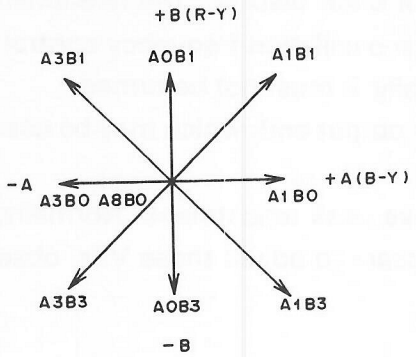

Color modulation signal level (Standard 7.5V)		Approximate color
Chroma A (B-Y)	Chroma B (R-Y)	
A0 = 0V	B0 = 0V	Light grey
A0 = 0V	B1 = −0.8V	Red
A0 = 0V	B3 = −0.8V	Cyan
A1 = −0.8V	B0 = 0V	Blue
A1 = −0.8V	B1 = −0.8V	Magenta
A1 = −0.8V	B3 = −0.8V	Blue cyan
A3 = −0.8V	B0 = 0V	Yellow
A3 = −0.8V	B1 = −0.8V	Orange
A3 = −0.8V	B3 = −0.8V	Green
A3 (BURST) = −0.4V	B0 = 0V	Burst

Chroma bias versus chroma modulation signals and versus approximate colors.

Fig. 4-62

— MEMO —

— MEMO —

CHAPTER 5
DISASSEMBLY AND REASSEMBLY

5.1 Precautions for Disassembly and Reassembly 5- 1

5.2 Disassembly and Reassembly of HX-20 into Units 5- 2

5.2.1 Case Cover 5- 2

5.2.2 Keyboard 5- 3

5.2.3 Control Circuit Board 5- 4

5.2.4 LCD Unit 5- 5

5.2.5 Batteries 5- 6

5.2.6 Micro Printer 5- 6

5.3 Disassembly and Reassembly of Units 5- 9

5.3.1 Keyboard Switches 5- 9

5.3.2 Micro Printer (Model-160) 5-11

5.3.2.1 Reassembly Stage A (Ribbon Feed Gear, Motor, Lead Cam Assy) 5-11

5.3.2.2 Reassembly Stage B (Print Head, Print Head Carriage) 5-13

5.3.2.3 Reassembly Stage C (Paper Feed Mechanism, Timing Detector Assembly, Circuit Board) 5-15

5.3.2.4 Reassembly Stage D (Cover, Ribbon Cassette) 5-18

5.4 Disassembly and Reassembly of Options 5-19

5.4.1 ROM Cartridge 5-19

5.4.2 Microcassette 5-21

5.4.2.1 Case Cover 5-21

5.4.2.2 Microcassette Mechanism (Belt, Motor, C Wheel/Idler, PE Switch, HP Switch, HP Motor, Pinch Rollers, P Lever Assembly, Pocket) 5-23

5.1 Precautions for Disassembly and Reassembly

Pay attention to the following precautions when disassembling or reassembling the HX-20.

(1) Make sure that the power switch on the HX-20 is off.

(2) Disconnect the options and cables from the HX-20.

(3) If programs are stored in the RMAs, transfer them onto a cassette tape or the like to save them.

(4) After removing the upper and lower cases, disconnect the cable from the battery connector (CN9) to prevent electrical circuits from shorting.

(5) Avoid directly placing the circuits boards that use ICs (for example, the MOSU circuit board and LCD panel circuit board) on a work bench. If it is necessary to do so, the component side must be down (to protect the circuit boards from static effect).

(6) Be careful not to pinch the cables with the cases.

(7) Be careful of screw length when using screws.

(8) If screw lock is used, be sure to apply the specified screw lock after tightening the screws.

* Unless otherwise specified, reassemble in the reverse order of disassembly.

5.2 Precautions for Disassembly and Reassembly

5.2.1 Case Cover

Disassembly Procedure	Disassembly Precautions
1. Turn the HX-20 upside down, and remove the 7 screws indicated by arrows in the sketch below.	
2. Turn the HX-20 back up, and slightly raise the LCD side of the upper case as shown below.	● When turning the HX-20 back up, hold the upper and lower cases together by hand so they won't open.
3. Disconnect the cable set No. 701 which connects the upper case to the connector CN8 on the MOSU circuit board.	● CN8 is a lock type connector so first grip the connector, slightly pull it up to unlock, and disconnect the cable.
4. Slowly open the upper case until the key tops face down.	

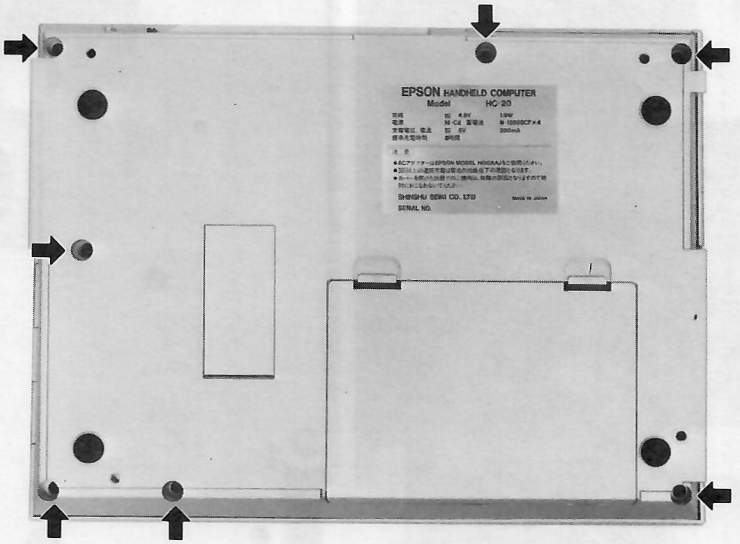

Fig. 5-1

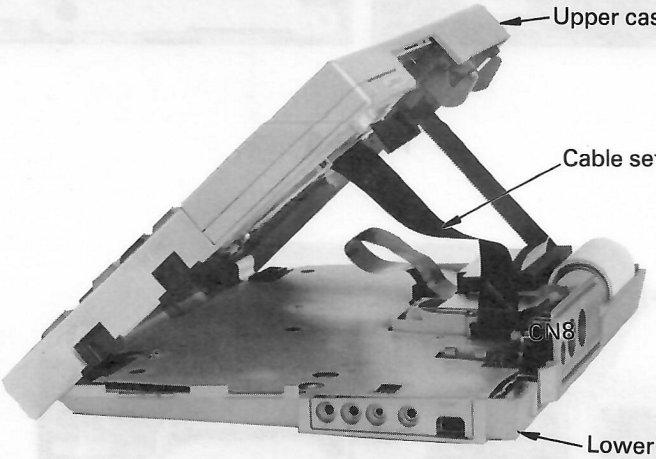

Fig. 5-2

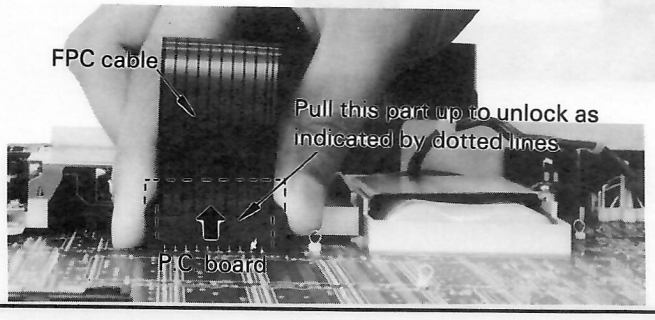

Fig. 5-3

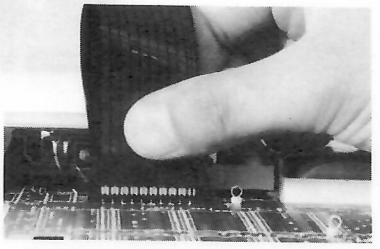

Fig. 5-4

5.2.2 Keyboard

Disassembly Procedure	Disassembly Precautions
1. Disconnect the FPC cables from connectors CN4, CN5 and KCN2. 2. Disconnect the piezo-electric buzzer connector from connector KCN1. 3. Remove the screws from Parts Ⓐ and Ⓑ. 4. Slowly raise the keyboard.	● Unlock the connectors before disconnecting the FPC cables. Slide this part in the arrow direction to the position indicated by dotted lines to unlock.

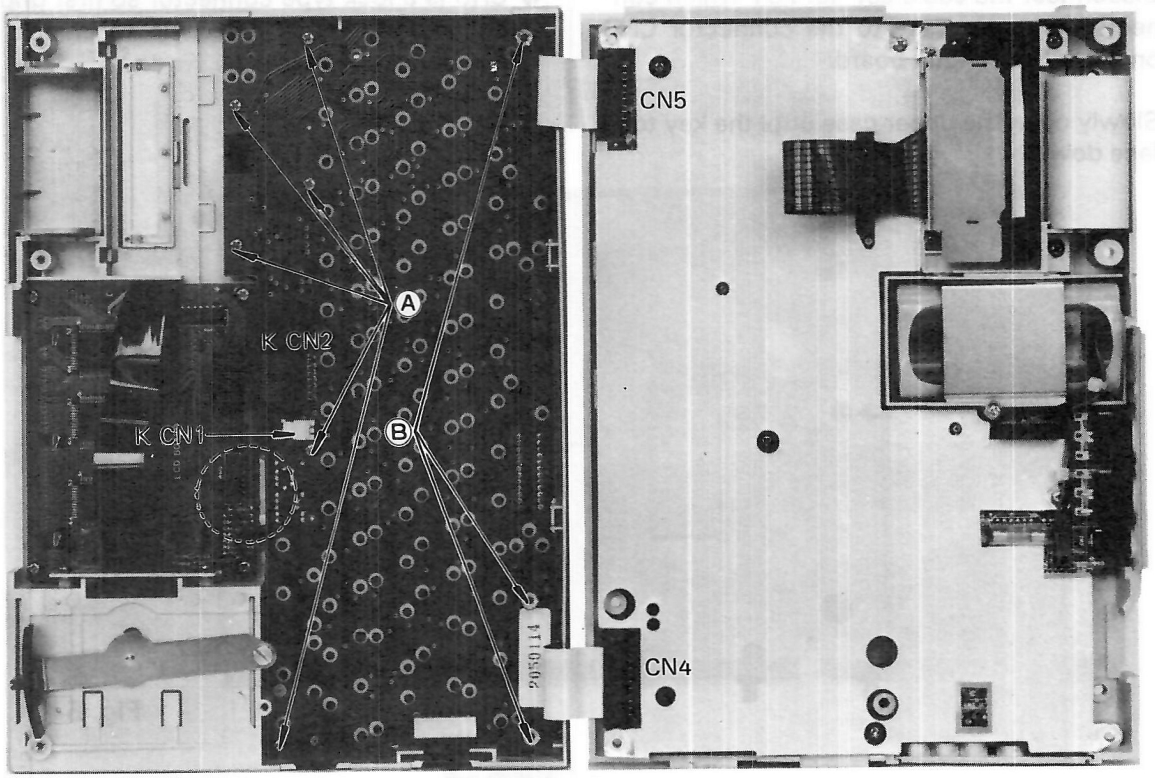

Fig. 5-5

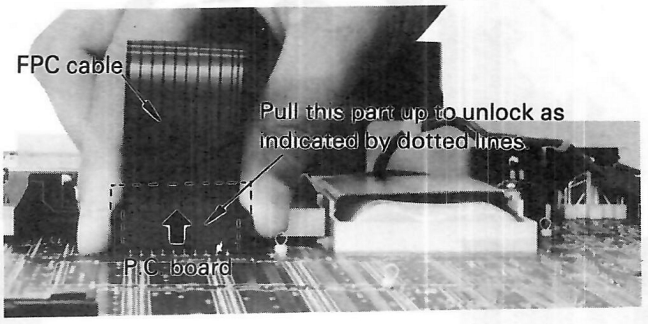

5.2.3 Control Circuit Board

Disassembly Procedure	Disassembly Precautions
1. Disconnect the battery cable from the battery connector CN9. 2. Disconnect the printer FPC cables from CN4, CN5 and CN6. 3. Remove the three screws from Part Ⓐ, and take off the printer together with its mount. 4. Remove the four screws from Part Ⓑ, and take off the shielding plate. 5. Remove the circuit board, exercising care that connector CN7 is not hit by the case.	● The connector is a lock type, and must be unlocked before disconnecting the battery cable. ● Connectors CN4 and CN5 are also a lock type, and must be unlocked before disconnecting the FPC cables.

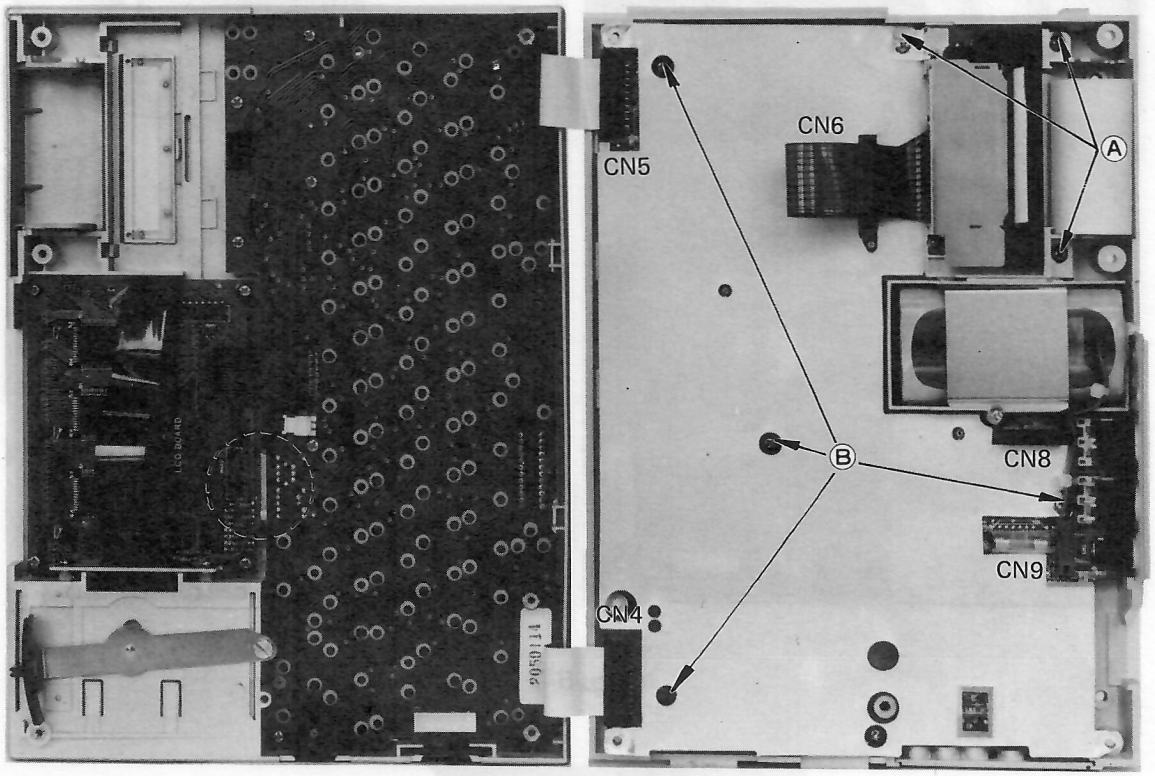

Fig. 5-6

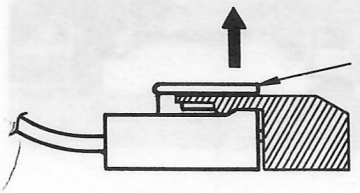

Raise this portion in the arrow direction, then the lock is released.

5.2.4 LCD Unit

Disassembly Procedure	Disassembly Precautions
1. Disconnect the FPC cable from connector KCN2. 2. Remove the four screws indicated by arrows in the sketch below. 3. Raise the liquid crystal dispay.	● Unlock the connector before disconnecting the FPC cable.

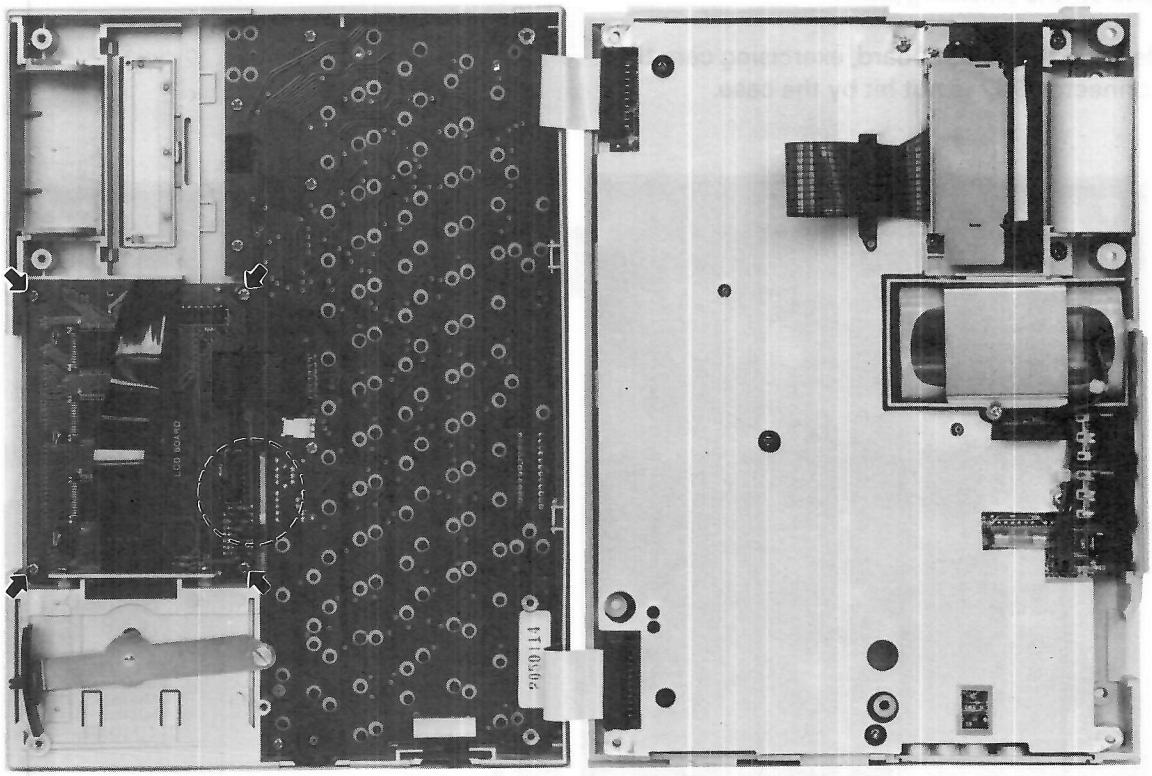

Fig. 5-7

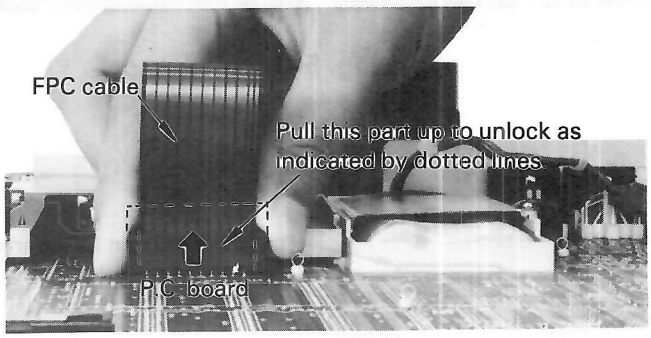

5.2.5 Batteries

Disassembly Procedure	Disassembly Precautions
1. Open the case cover of the HX-20. 2. Disconnect the battery cable from connector CN9. 3. Remove the screw from Part A, the battery holding plate, and the batteries.	● Unlock the connector before disconnecting the battery cable.

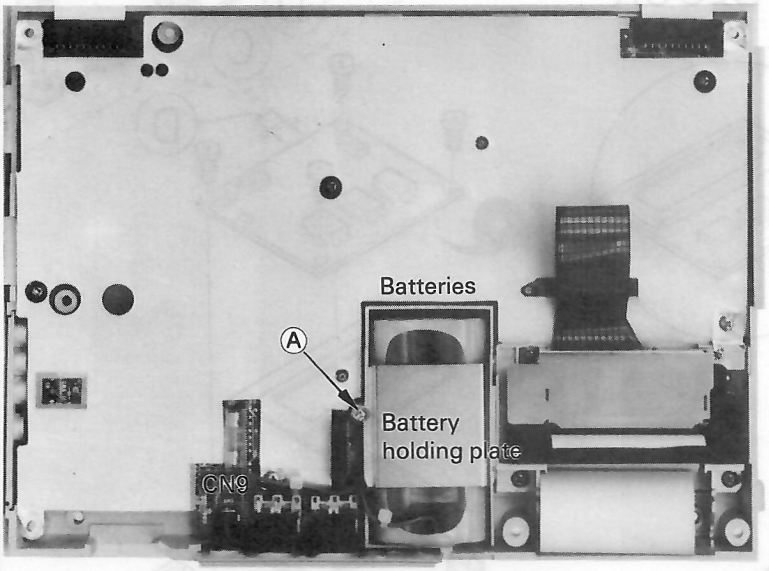

Fig. 5-8

5.2.6 Micro Printer

Disassembly Procedure	Disassembly Precautions
1. Open the case cover of the HX-20. 2. Disconnect the FPC cable from connector CN6. 3. To remove the printer mechanism alone, remove the two screws from Part B. When removing the printer together with the printer mount, remove the three screws from Part A. 4. Raise the printer and pull it out.	● Unlock the connector before disconnecting the cable.

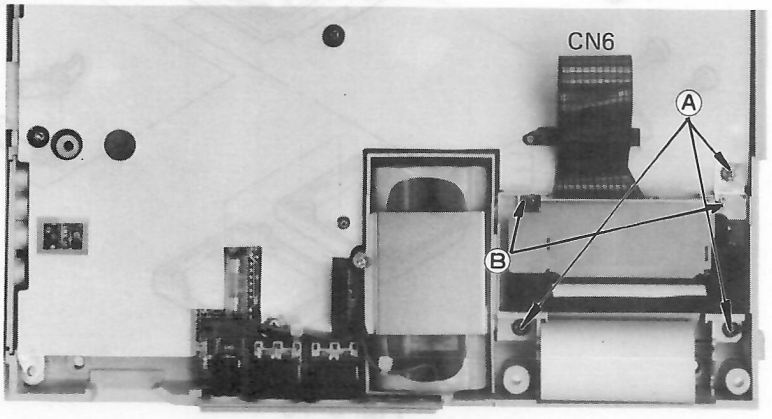

Fig. 5-9

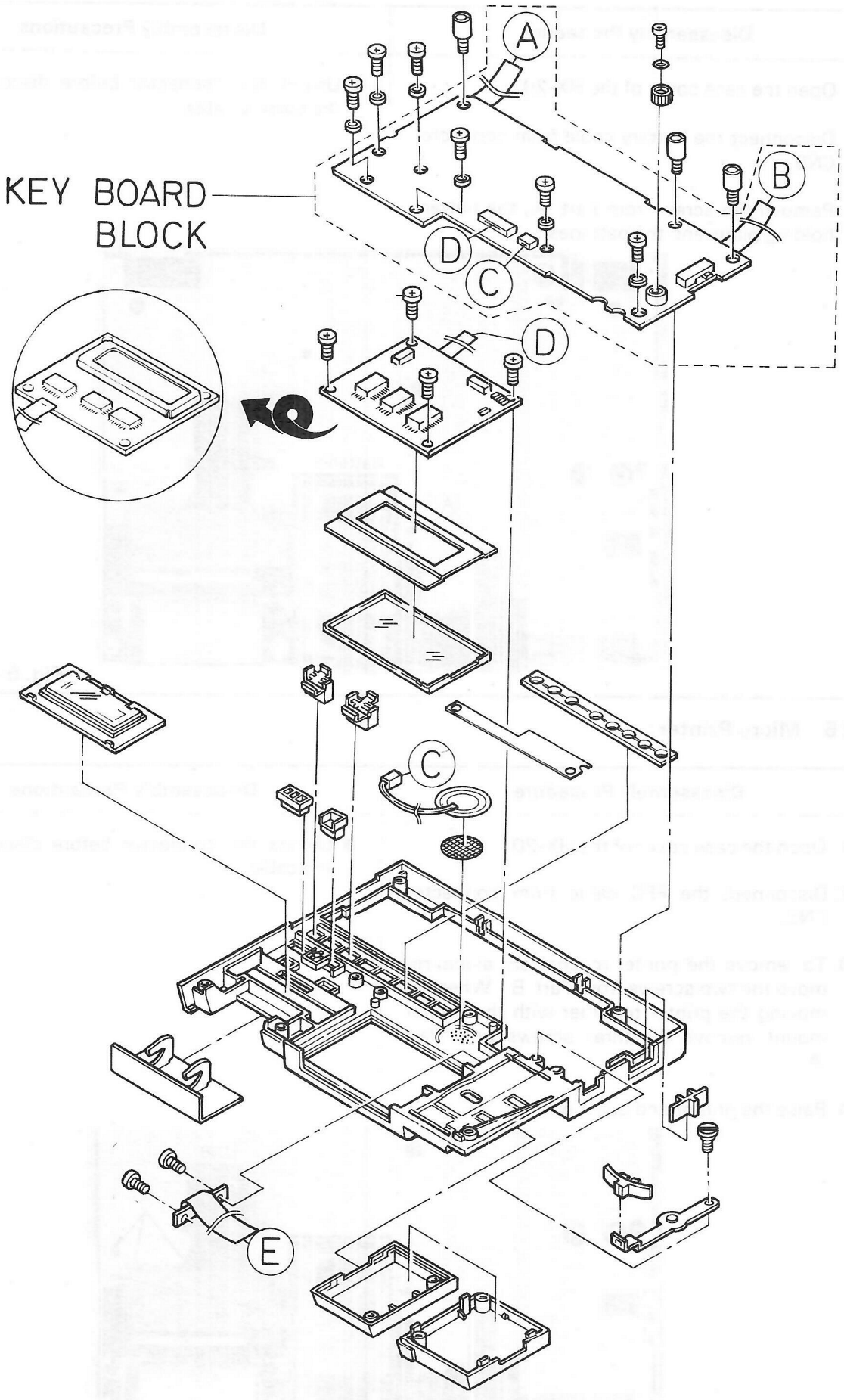

Fig. 5-10

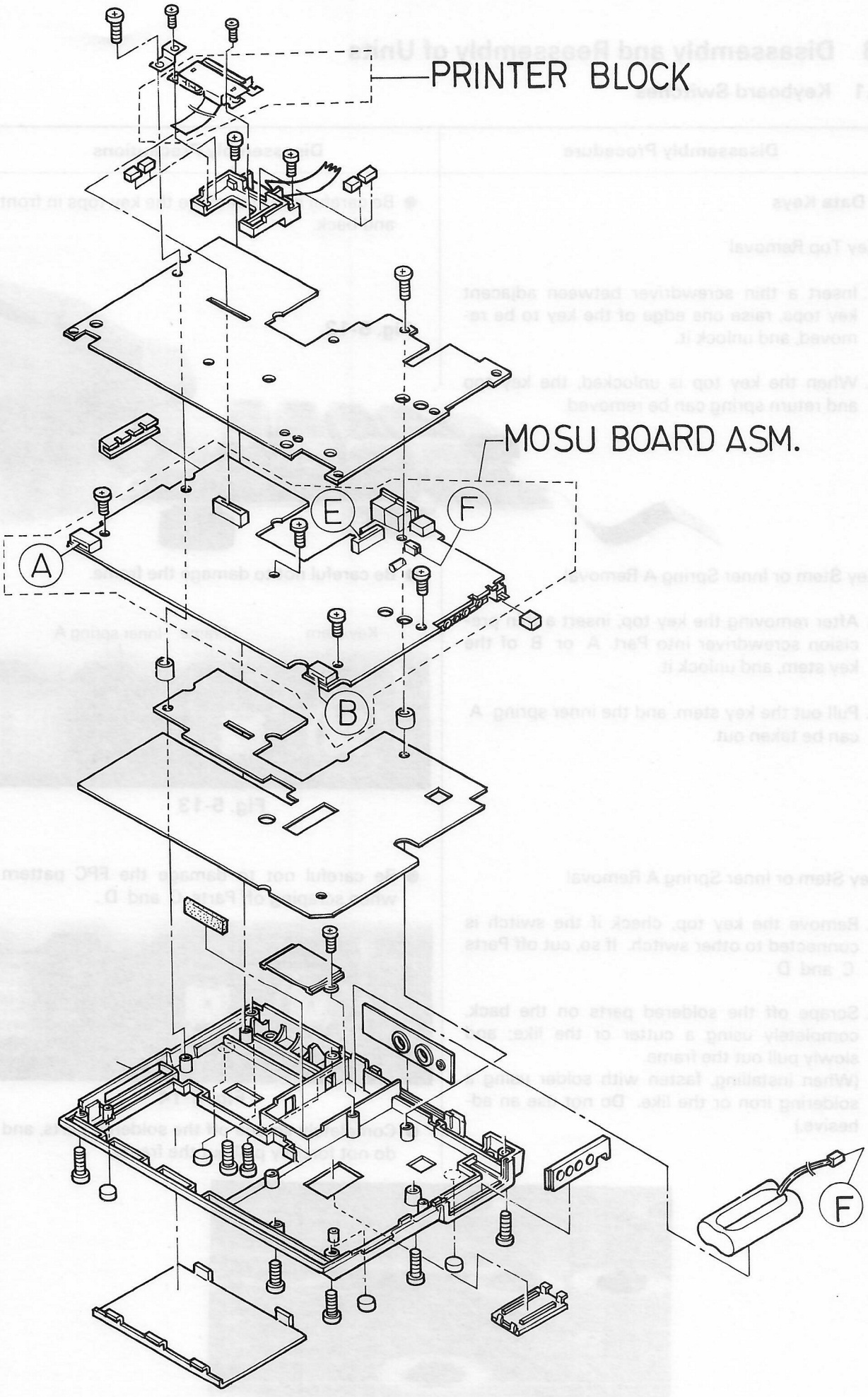

Fig. 5-11

5.3 Disassembly and Reassembly of Units

5.3.1 Keyboard Switches

Disassembly Procedure	Disassembly Precautions
*** Data Keys** Key Top Removal 1. Insert a thin screwdriver between adjacent key tops, raise one edge of the key to be removed, and unlock it. 2. When the key top is unlocked, the key top and return spring can be removed.	● Be careful not to damage the key tops in front and back.

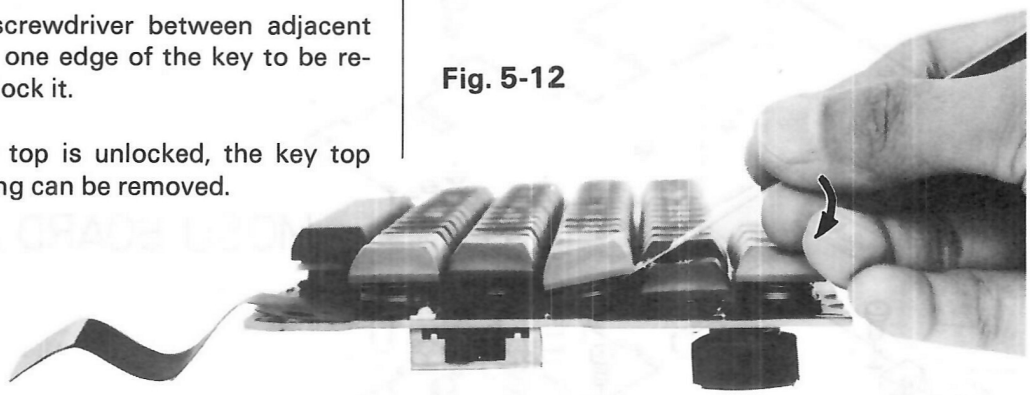

Fig. 5-12

Key Stem or Inner Spring A Removal 1. After removing the key top, insert a thin precision screwdriver into Part A or B of the key stem, and unlock it. 2. Pull out the key stem, and the inner spring A can be taken out.	● Be careful not to damage the frame.

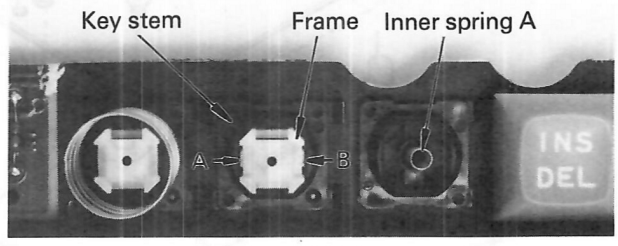

Fig. 5-13

Key Stem or Inner Spring A Removal 1. Remove the key top, check if the switch is connected to other switch. If so, cut off Parts C and D. 2. Scrape off the soldered parts on the back, completely using a cutter or the like; and slowly pull out the frame. (When installing, fasten with solder using a soldering iron or the like. Do not use an adhesive.)	● Be careful not to damage the FPC pattern when scraping off Parts C and D.

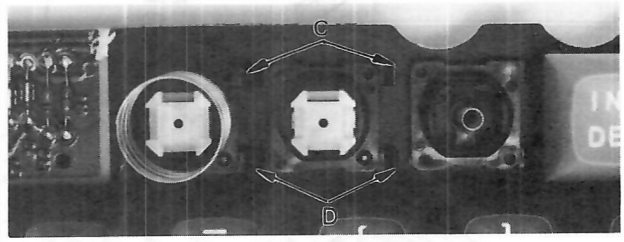

Fig. 5-14

● Completely scrape off the soldered parts, and do not forcibly pull out the frame.

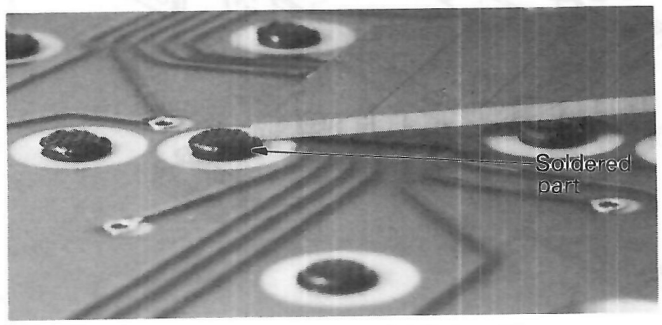

Fig. 5-15

Disassembly Procedure	Disassembly Precautions
*** Function Keys** When the keyboard is removed from the casing, the rubber contact points are exposed. Function key tops are mounted under these rubber contact points (8 in a row).	● Keep the conductive parts of the rubber contacts free of dust. ● When installing the keyboard, make sure that the rubber contacts are in position.

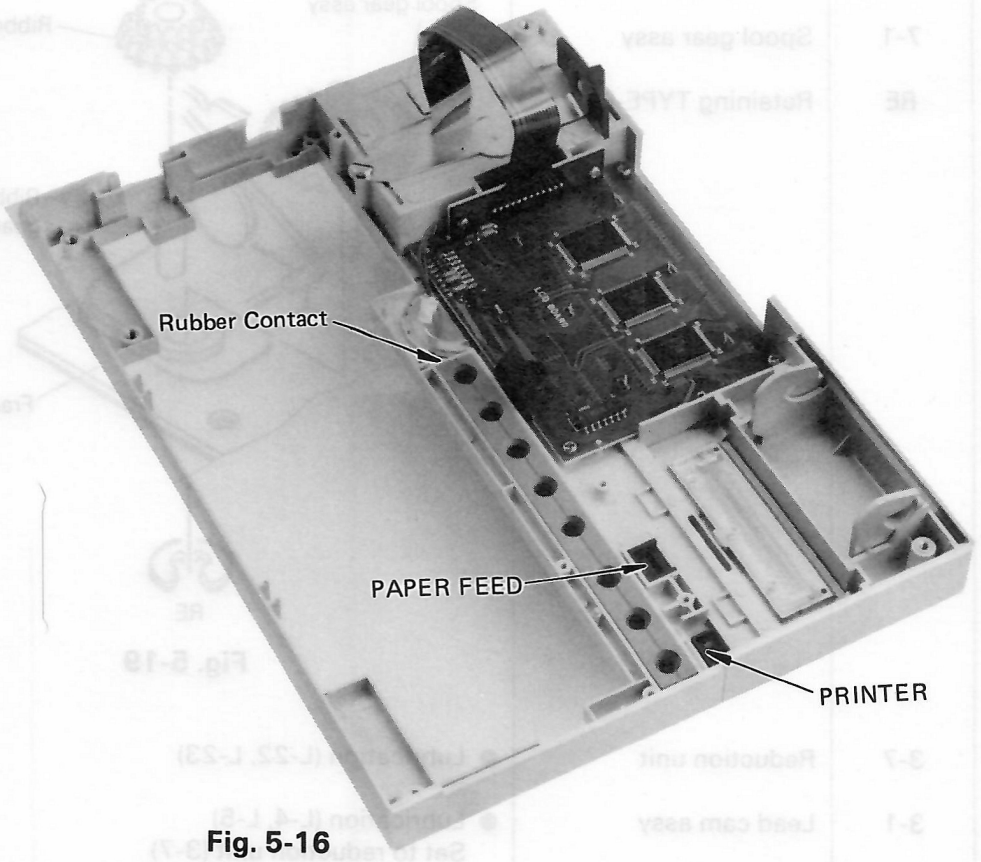

Fig. 5-16

Be careful of the direction of the rubber-contact switches which have their own direction.

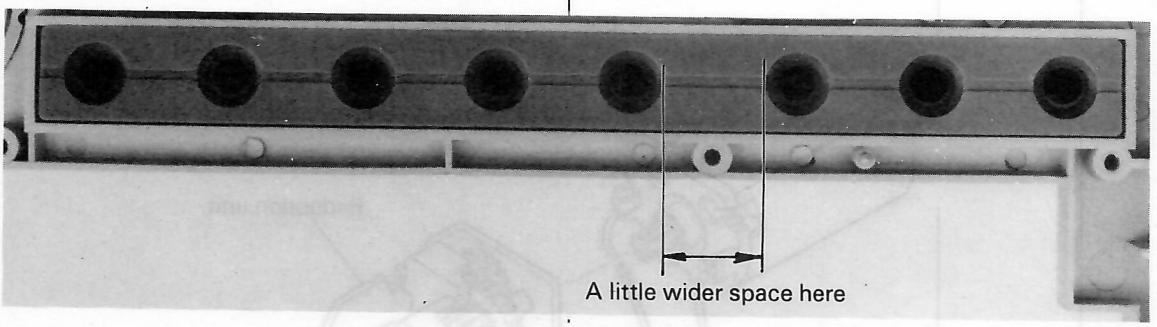

Fig. 5-17

*** Printer Key**

Exercise care about the installation procedure when installing or replacing the printer ON/OFF key.

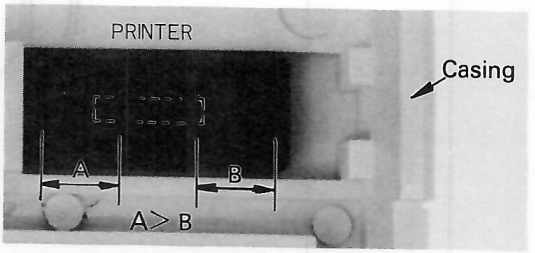

Fig. 5-18

5.3.2 Micro Printer (Model – 160)

5.3.2.1 Reassembly Stage A (Ribbon Feed Gear, Motor, Lead Cam Assy etc.)

REASSEMBLY STEP	REF. NO.	NAME OF PART or REASSEMBLY	POINTS OF REASSEMBLY WORK
1	1-1	Frame assy	● Lubrication (L-1).
2	3-6	Ribbon feed gear	
3	7-1	Spool gear assy	
	RE	Retaining TYPE-E (2)	
4	3-7	Reduction unit	● Lubrication (L-22, L-23)
5	3-1	Lead cam assy	● Lubrication (L-4, L-5) Set to reduction unit (3-7)

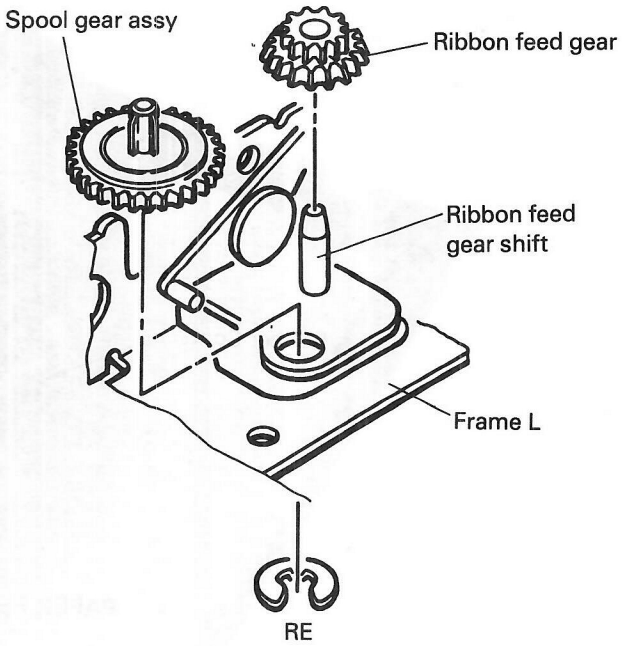

Fig. 5-19

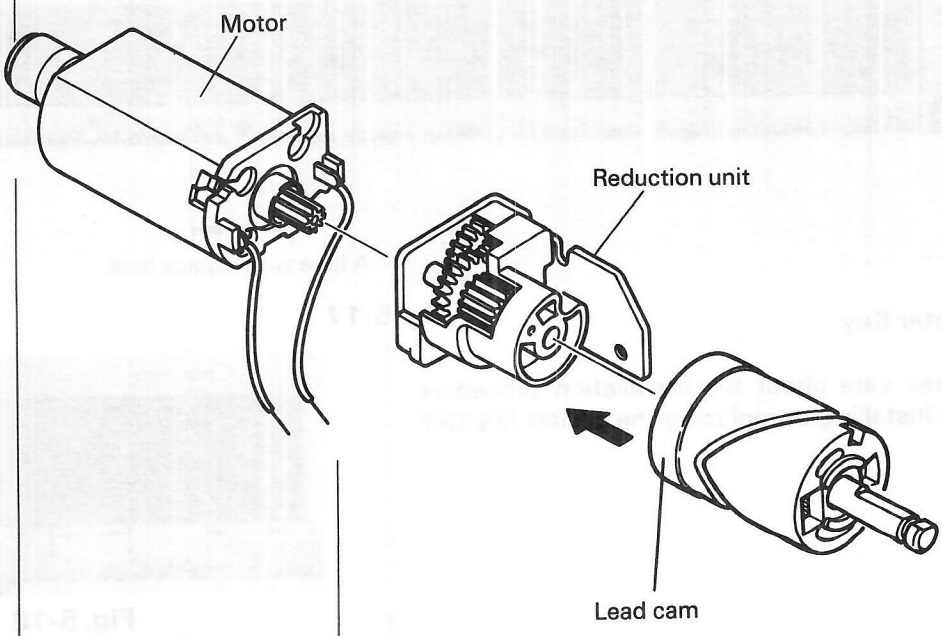

Fig. 5-20

REASSEMBLY STEP	REF. NO.	NAME OF PART or REASSEMBLY	POINTS OF REASSEMBLY WORK
6	2-1	Motor assy	● Reassembly motor unit, reduction unit and lead cam assy, then set the assembly in the frame and secure the motor to the frame by means of screws. Lubrication (L-24)
	SF	Slotted flat head machine screw (1 pcs.) (M1.6 × 2)	
7	3-2	Cam shaft bearing	● Lubrication (L-6). ● Push the bearing paying attention to the position of its detent part with respect to the corresponding notch in the frame.

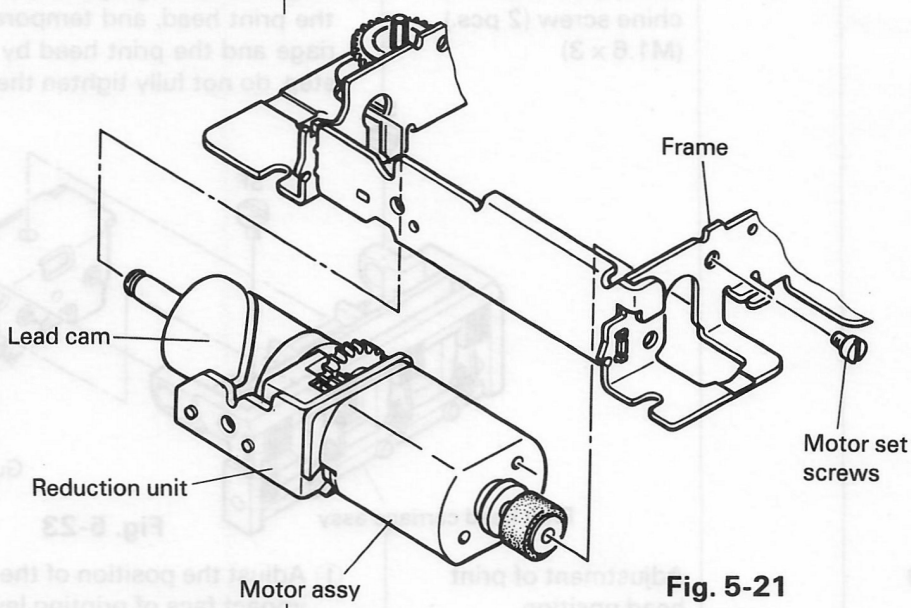

Fig. 5-21

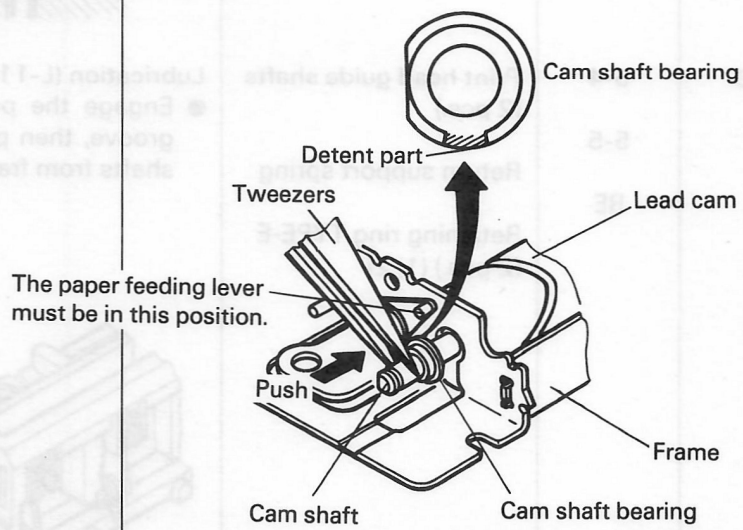

Fig. 5-22

5.3.2.2 Reassembly Stage B (Print Head, Print Head Carriage, etc.)

REASSEMBLY STEP	REF. NO.	NAME OF PART or REASSEMBLY	POINTS OF REASSEMBLY WORK
8	5-1	Print head assy	● Lubrication (L-7, L-8).
	5-3	Print head carriage assy	● Lubrication (L-9, L-10)
	SF	Slotted flat head machine screw (2 pcs.) (M1.6 x 3)	● Align the carriage guide pins with the guide holes in the print head, and temporarily reassemble the carriage and the print head by means of screw (at this step, do not fully tighten the screws).
9		Adjustment of print head position	① Adjust the position of the print head so that the impact face of printing lever becomes flush with the reference face of print head carriage, as illustrated below. ② Now tighten the screws fully.
10	5-4	Print head guide shafts (2 pcs.)	Lubrication (L-11, L-12) ● Engage the print head drive pin in the lead cam groove, then put into position the print head guide shafts from frame L side.
	5-5	Return support spring	
	RE	Retaining ring TYPE-E (2 pcs.) (1, 2)	

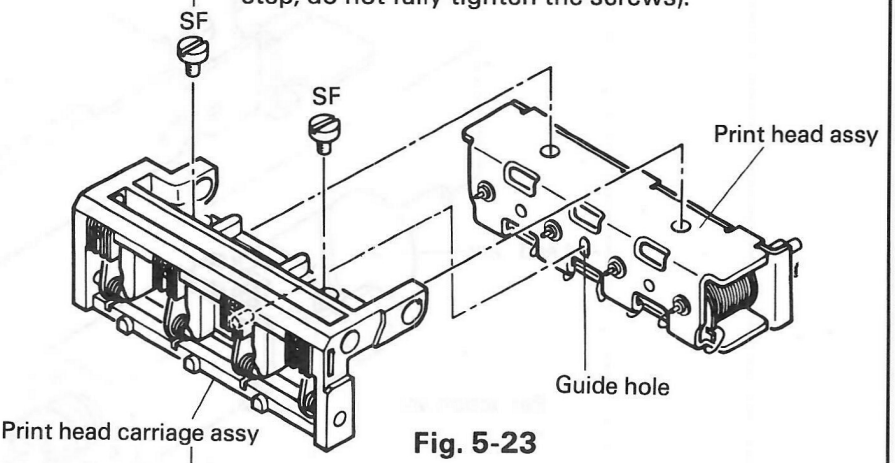

Fig. 5-23

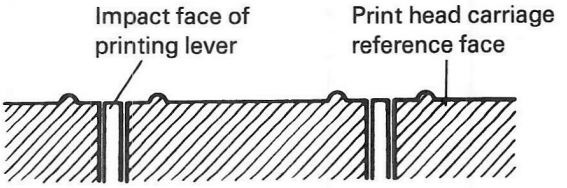

Fig. 5-24

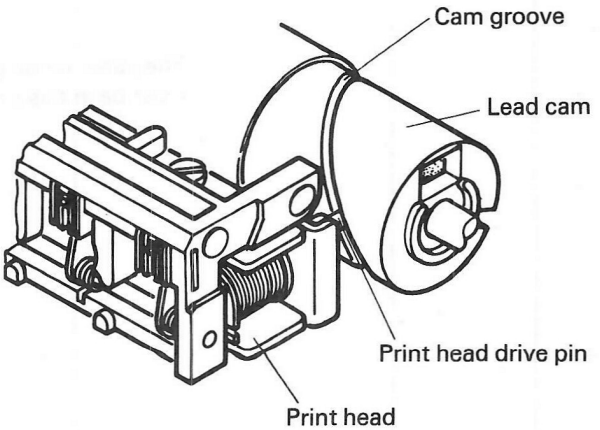

Fig. 5-25

REASSEMBLY STEP	REF. NO.	NAME OF PART or REASSEMBLY	POINTS OF REASSEMBLY WORK

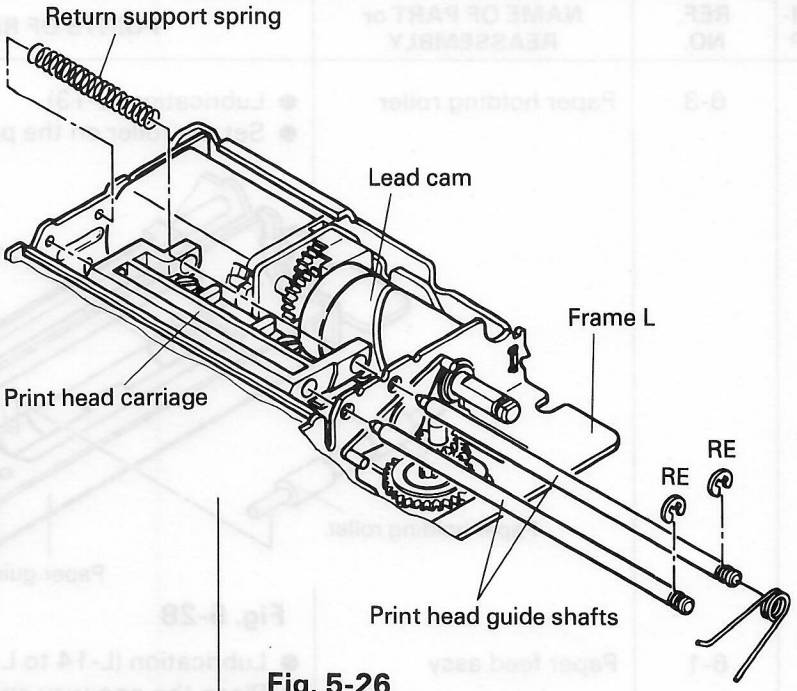

Fig. 5-26

11	5-2	FPC	● Solder FPC as follows:
	SF	Slotted flat head machine screw (2 pcs.) (M1 × 2)	① Secure FPC to the back of the print head by means of screws. ② Cut the two wires of print solenoid A to the same length, and so with solenoids B, C and D. (Solenoid A is the solenoid to be located nearest to frame L.) ③ Solder the wires of solenoids A, B, C and D in this order. PRECAUTIONS * ● Do not apply the iron to FPC for too long a time. ● Be careful that solenoid wires be not broken.

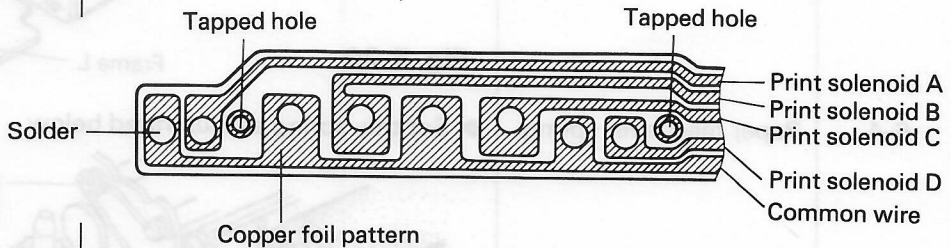

Fig. 5-27

5.3.2.3 Reassembly Stage C (Paper Feed Mechanism, Timing Detector Assy, Circuit Board etc.)

REASSEMBLY STEP	REF. NO.	NAME OF PART or REASSEMBLY	POINTS OF REASSEMBLY WORK
12	6-3	Paper holding roller	● Lubrication (L-13). ● Set the roller on the paper holding spring.
13	6-1	Paper feed assy	● Lubrication (L-14 to L-18). ● Place the one-way spring on the paper feed assembly, then set the assembly in the frame, as illustrated below. ● Put the detent part of the plane bearing in the corresponding notch in the frame. ● Be careful not to damage gear teeth, which are very fine.
	RE	Retaining ring TYPE-E (2)	
	6-2	One-way spring	
14	6-4	Paper feed lever spring.	● Set this spring as illustrated below.

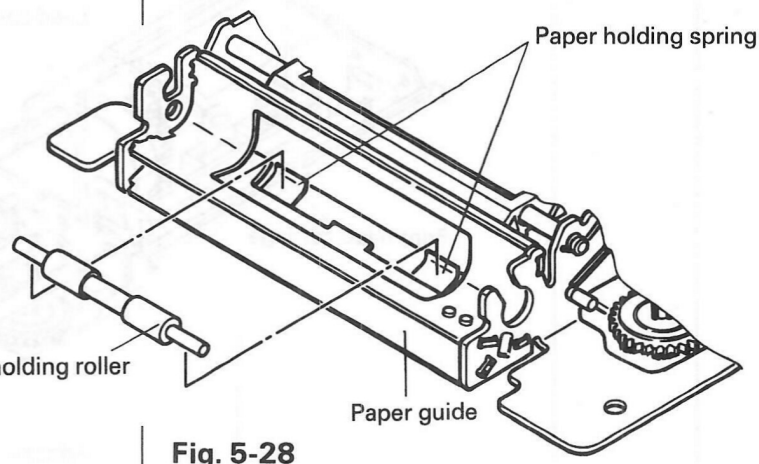

Fig. 5-28

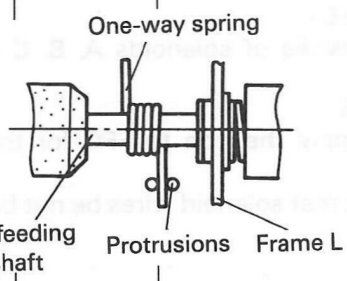

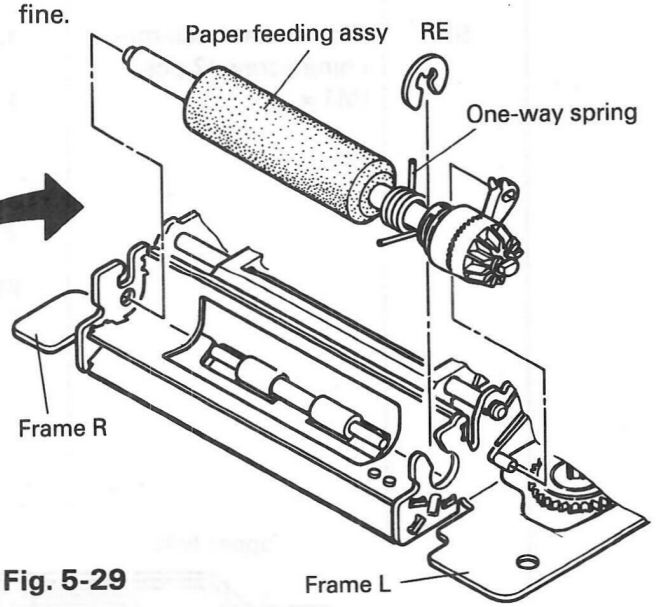

Fig. 5-29

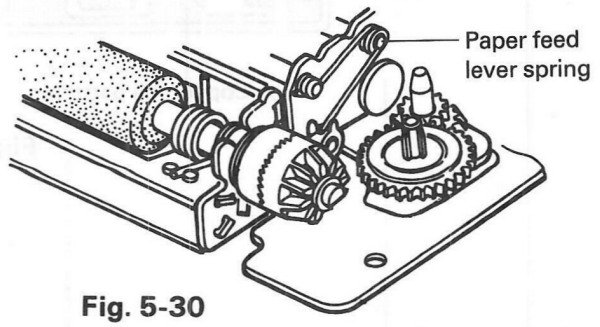

Fig. 5-30

REASSEMBLY STEP	REF. NO.	NAME OF PART or REASSEMBLY	POINTS OF REASSEMBLY WORK
15	3-4	Ribbon feed cam	● Lubrication (L-19 to L-21).
	3-5	Cam spring	● Place the ribbon feed cam in position as follows: ① Turn the timing detector magnet until the D-groove of the cam shaft faces toward the frame bottom. ② Place on the cam shaft the plain washer, cam spring and ribbon feed cam, in this order. ③ Place the retaining ring TYPE-E in position.
	RE	Retaining ring TYPE-E (1.5)	
16	4-2	Circuit board assy	● Press the circuit board against the frame tie plate, then against frame L. After that, push it down and finally secure to the tie plate by means of screws.
	SF	Slotted flat head machine screw (1 pcs.) (M1.6 × 3)	

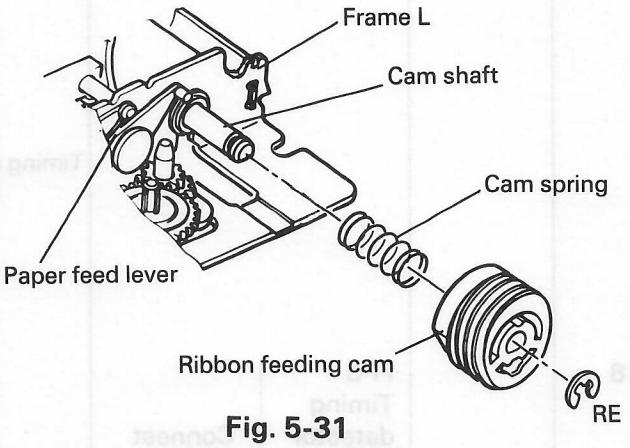

Fig. 5-31

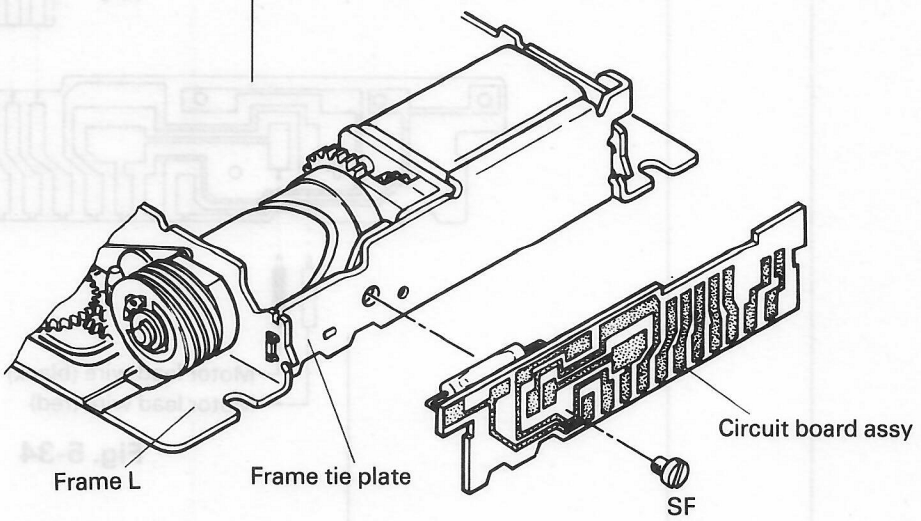

Fig. 5-32

REASSEMBLY STEP	REF. NO.	NAME OF PART or REASSEMBLY	POINTS OF REASSEMBLY WORK
6	4-1	Timing detector assy	● Place the timing detector assy on the timing detector magnet, and secure with screw. ● Clearance between the timing detector assy and the timing detector magnet must be uniform.
	SF	Slotted flat head machine screw (M1.4 × 1.8)	
18		FPC, Timing detector assy, Motor lead wires } Connect by soldering.	

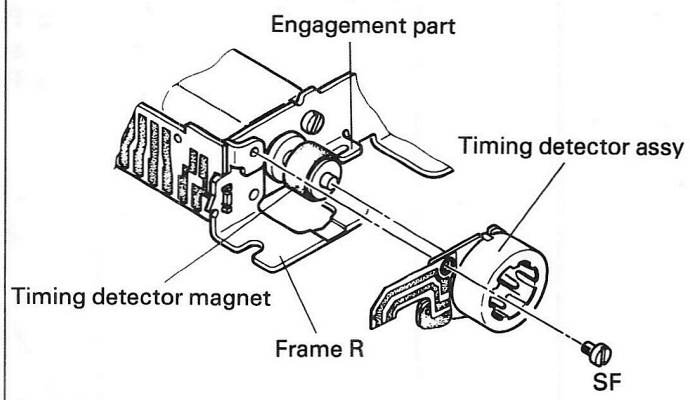

Fig. 5-33

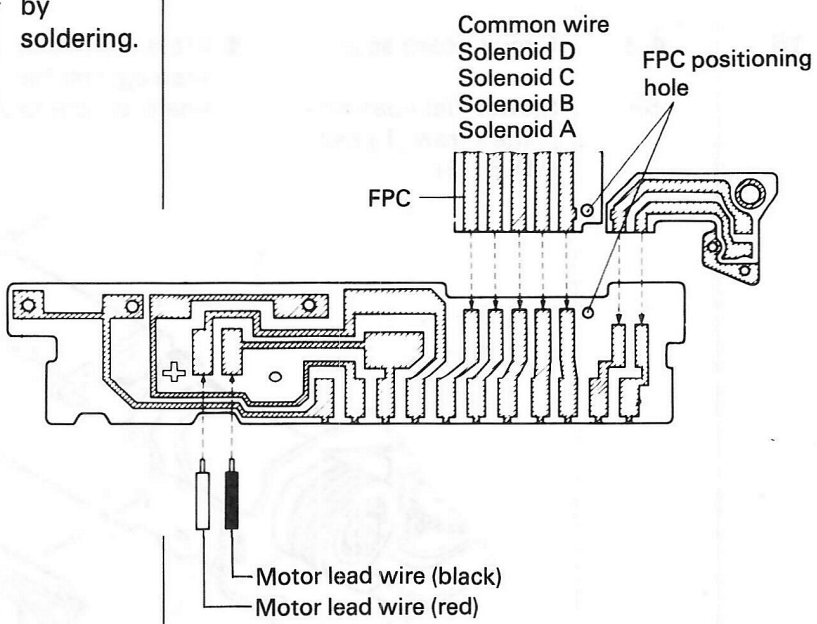

Fig. 5-34

- Align the positioning hole in the FPC with that in the circuit board, then solder these elements.
- Do not apply the iron to the FPC for too long a time.

5.3.2.4 Reassembly Stage D (Cover and Ribbon Cassette)

REASSEMBLY STEP	REF. NO.	NAME OF PART or REASSEMBLY	POINTS OF REASSEMBLY WORK
19	8-1	Cover.	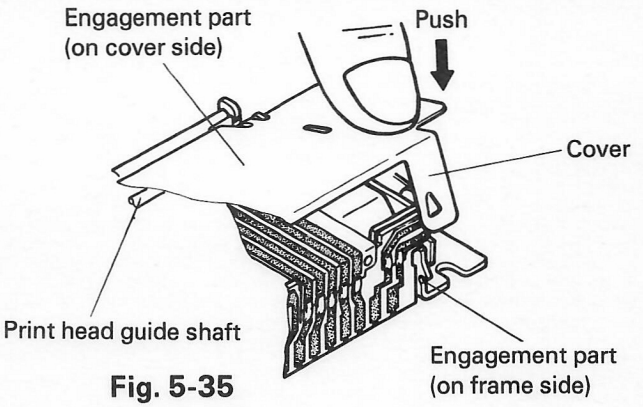 **Fig. 5-35** ● Engage the engagement part of the cover on the print head guide shaft, and push the cover to lock it on the frame. (Carry out this operation on both ends of the cover.) ● Check if the FPC is in the FPC receiving recess on frame R side. 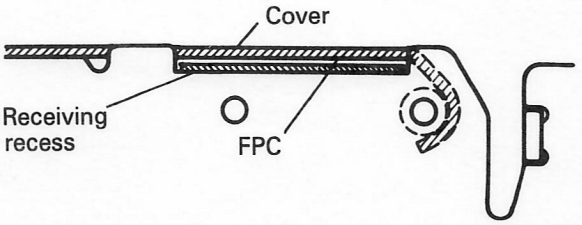 **Fig. 5-36**
20	7-2	Ribbon cassette	● Set the ribbon cassette in position as illustrated below. 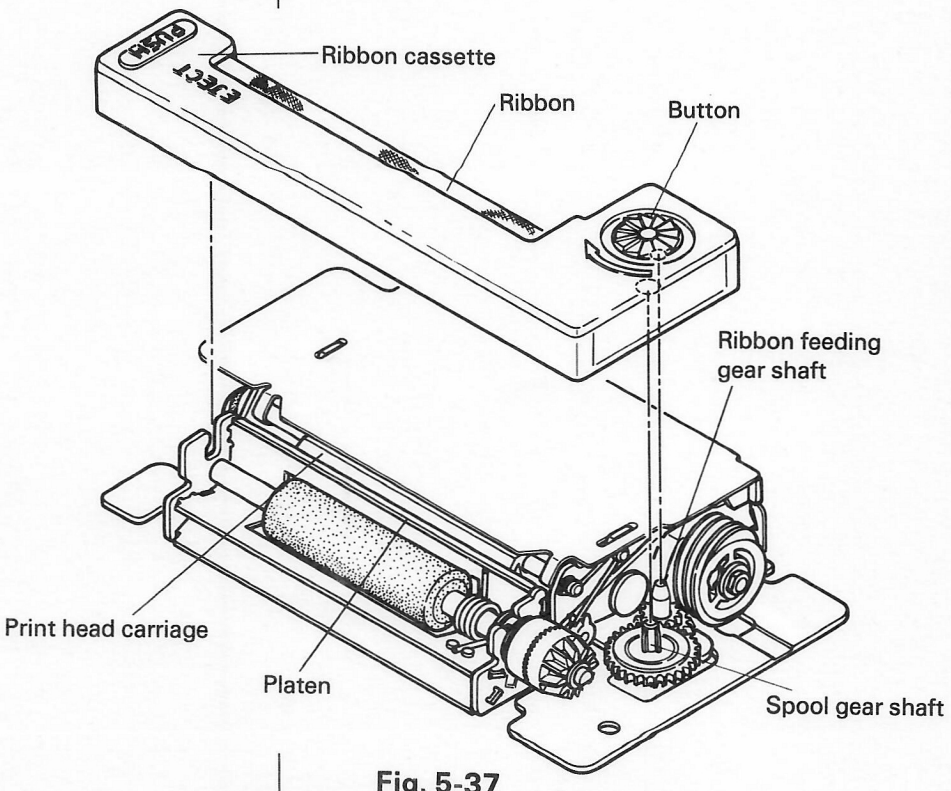 **Fig. 5-37**

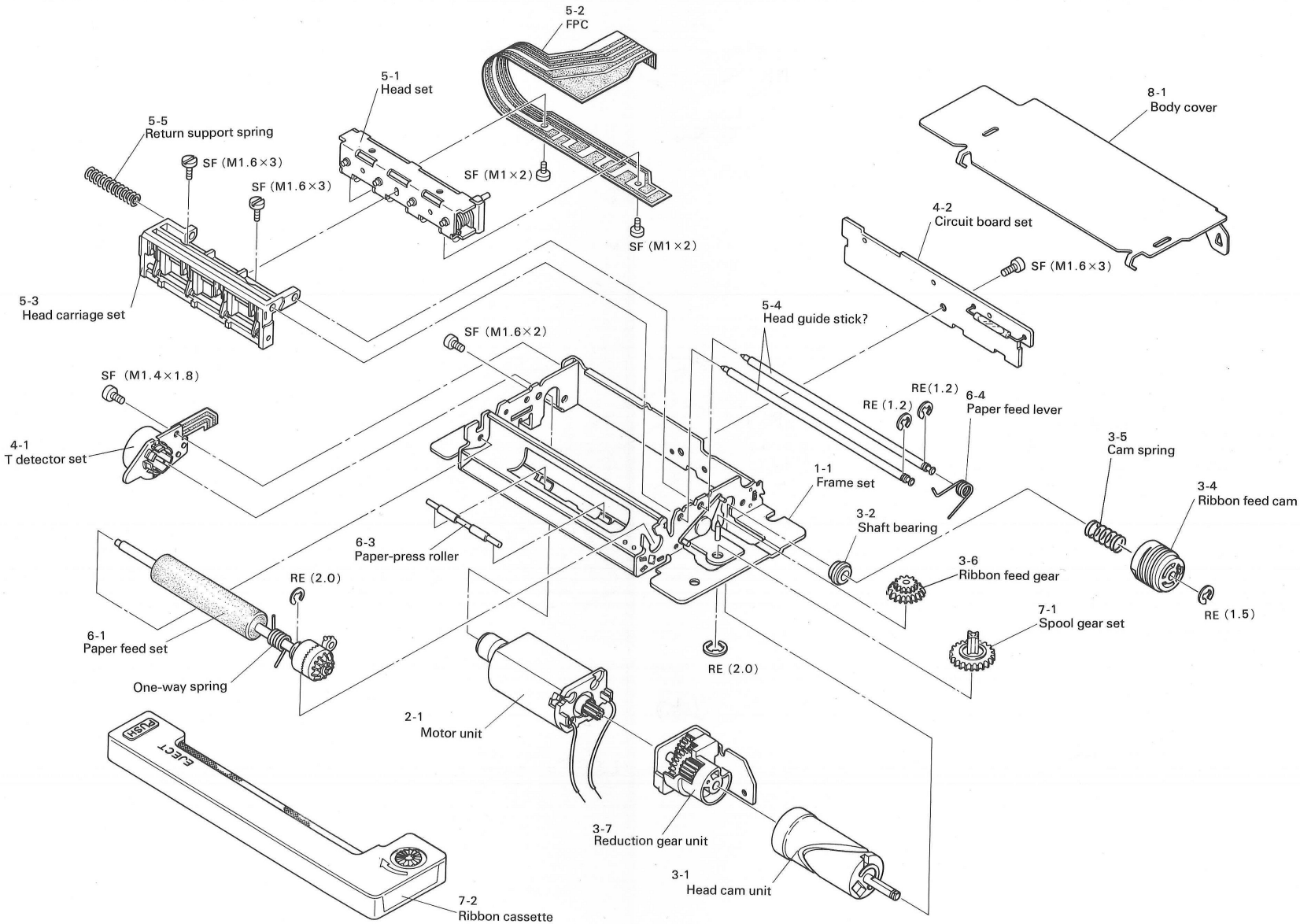

Fig. 5-38 Model-160 Exploded View



5.4 Disassembly and Reassembly of Options

5.4.1. ROM Cartridge

Disassembly Procedure	Disassembly Precautions
1. Remove the two screws on the back of the cartridge case.	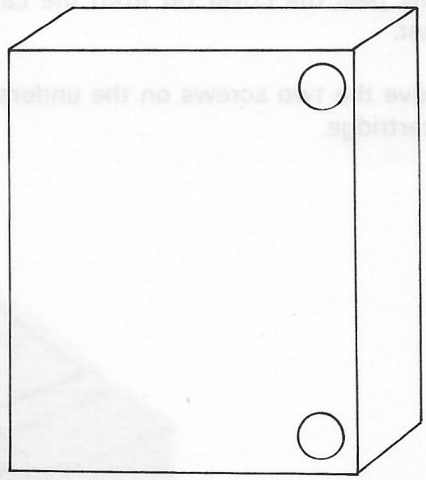

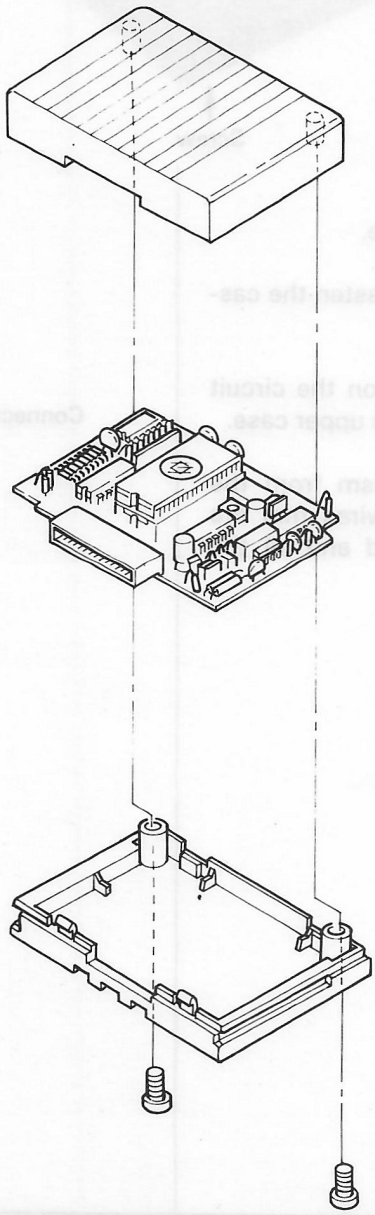

Fig. 5-39

5.4.2 Microcassette

5.4.2.1 Case Cover

Disassembly Procedure	Disassembly Precautions
1. Slowly peel the cover off from the cassette pocket. 2. Remove the two screws on the underside of the cartridge.	● Be careful not to bend the cassette pocket cover.

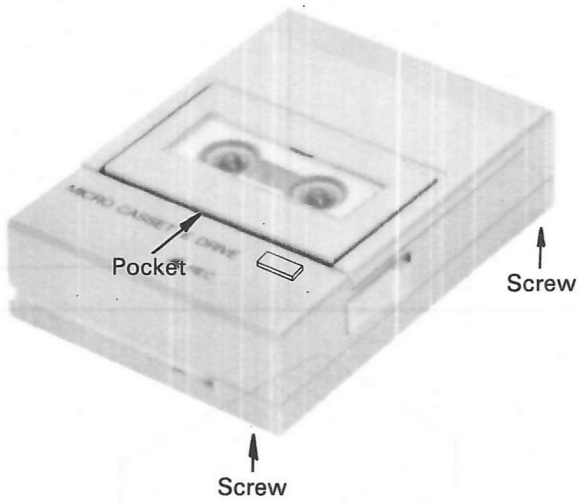

Fig. 5-40

3. Remove the cartridge lower case. 4. Remove the three screws that fasten the cassette mechanism. 5. With the cassette mechanism on the circuit board, slowly remove it from the upper case. * When separating the mechanism from the circuit board, remove all the wires that are connected to the circuit board and all the mounting screws.	

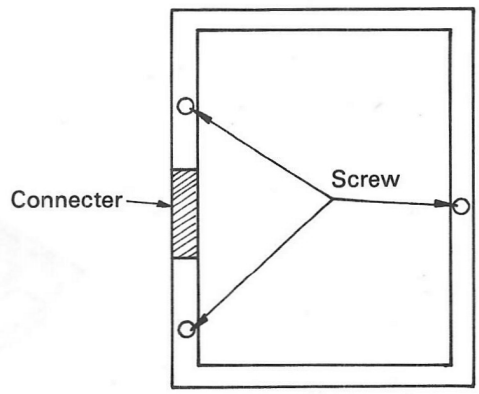

Be careful not to hitch the cassette pocket cover.

Fig. 5-41

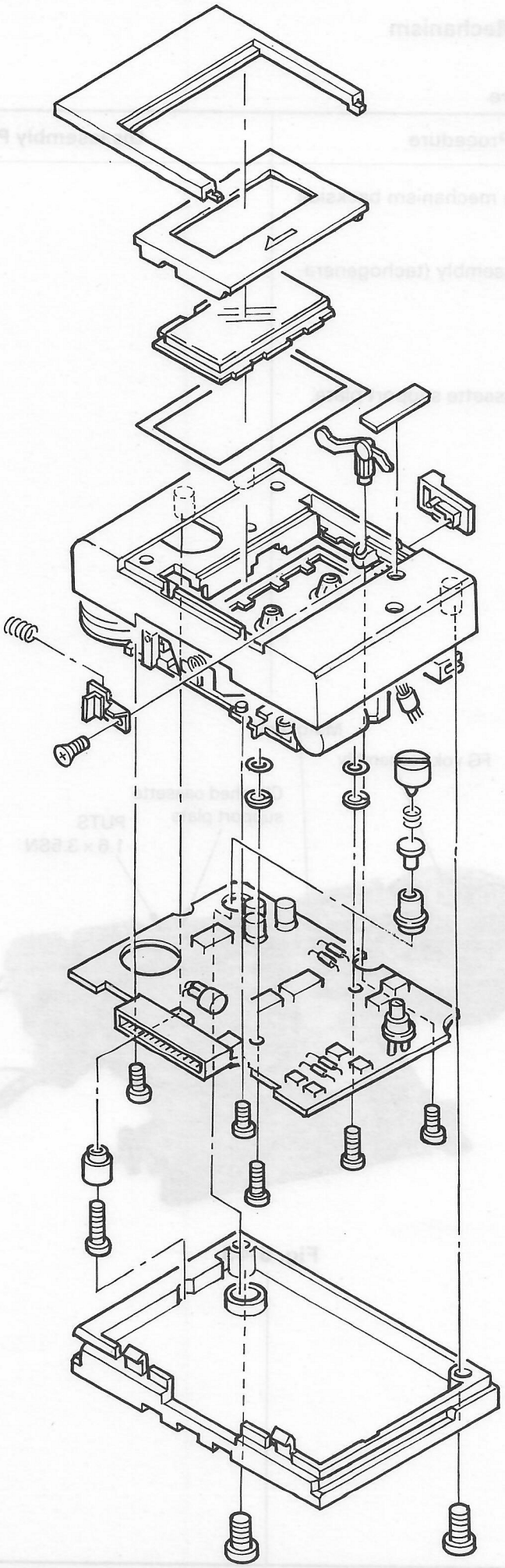

Fig. 5-42

5.4.2.2 Microcassette Mechanism

1 Microcassette Assy

1-1 Disassembly Procedure

Disassembly Procedure	Disassembly Precautions
1. Place the microcassette mechanism backside up. 2. Remove the FG yoke assembly (tachogenerator). PUTS1.6 × 4SN × 2 FG support × M 3. Remove the clinched cassette support plate. PUTS1.6 × 3.5SN ×2 4. Remove the motor belt.	

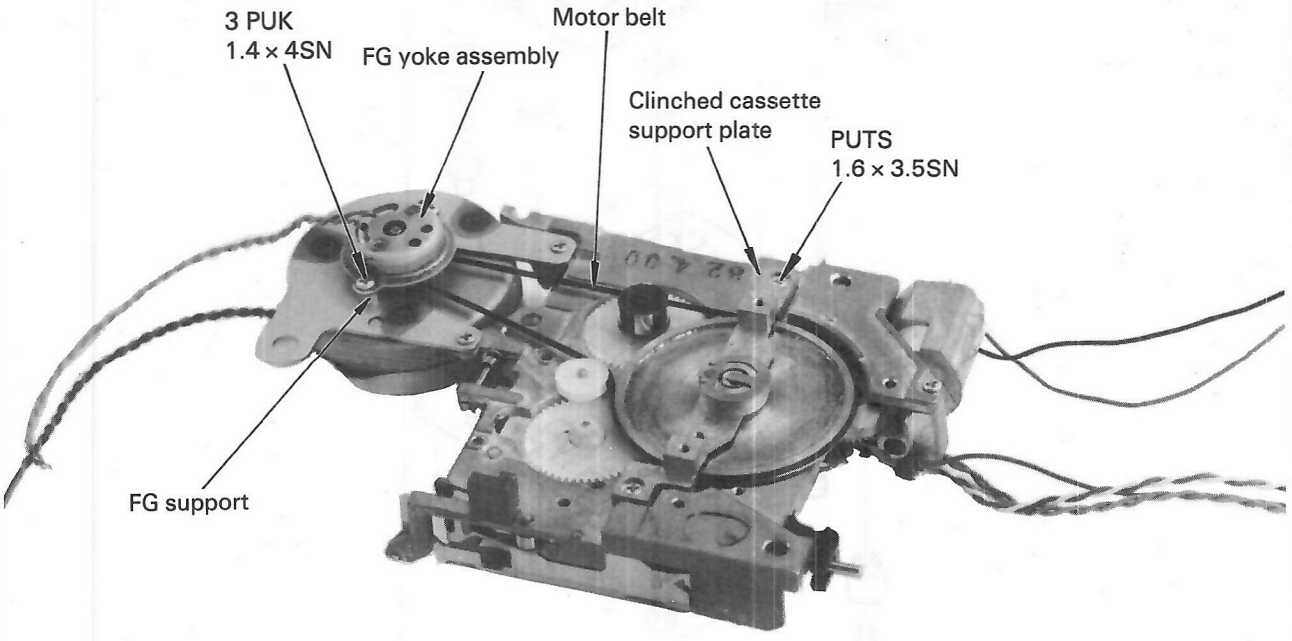

Fig. 5-43

1-2 Reassembly Procedure

Reassembly and Adjustment Procedure	Precautions for Reassembly and Adjustment
1. Check if the cassette shaft, idler, and motor are installed. If not, install them. 2. Place the motor belt around the motor shaft, pulley, and the V-groove of the cassette wheel. 3. Correct the belt if twisted, and check if the belt turns smoothly. 4. Clinch the cassette support plate in place. PUTS 1.6 × 3.5 SN × 2 5. Install the FG yoke assembly. 3 PUTS 1.4 × 4 SN × 2 FG support × 2 6. Apply a screw lock to the mounting screws for the FG yoke assembly.	● Be careful not to stain the belt with adhesive, oil, or grease.

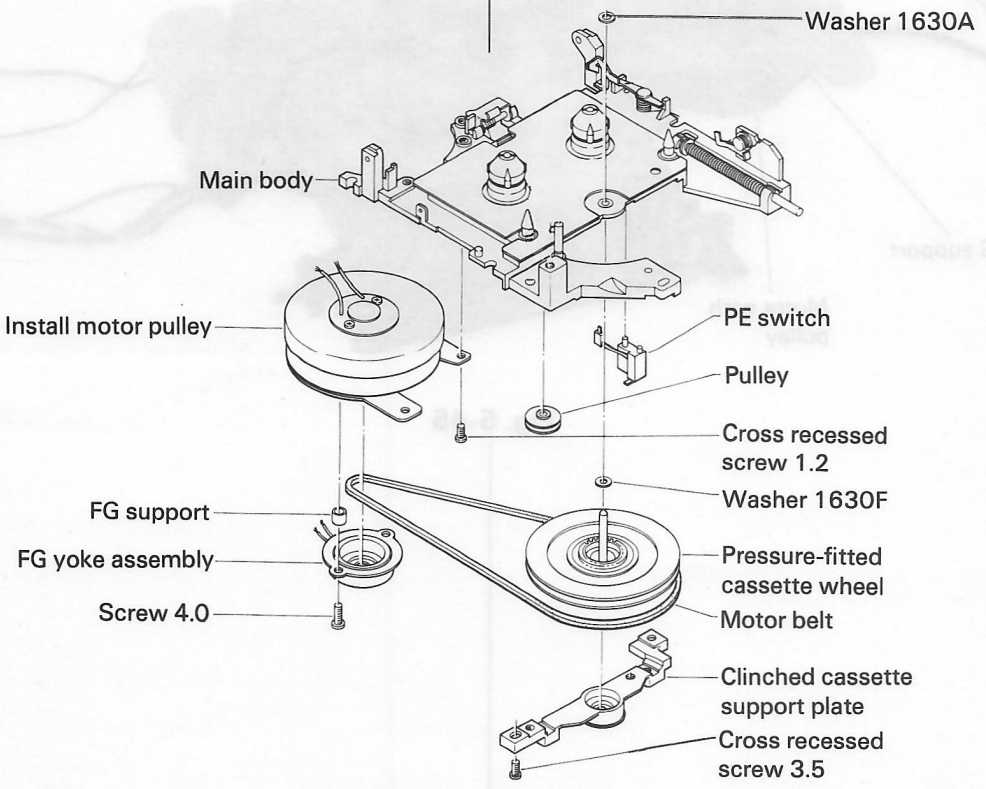

Fig. 5-44

2. Motor

2-1 Disassembly Procedure

Disassembly Procedure	Disassembly Precautions
1. Remove the FG yoke assembly. 3 PUK 1.4 × 4 SN × 2 FG support × 2 2. Remove the motor belt from the motor pulley on the motor. 3. Remove the motor pulley. PUTS 1.6 × 2.2 SN × 2	

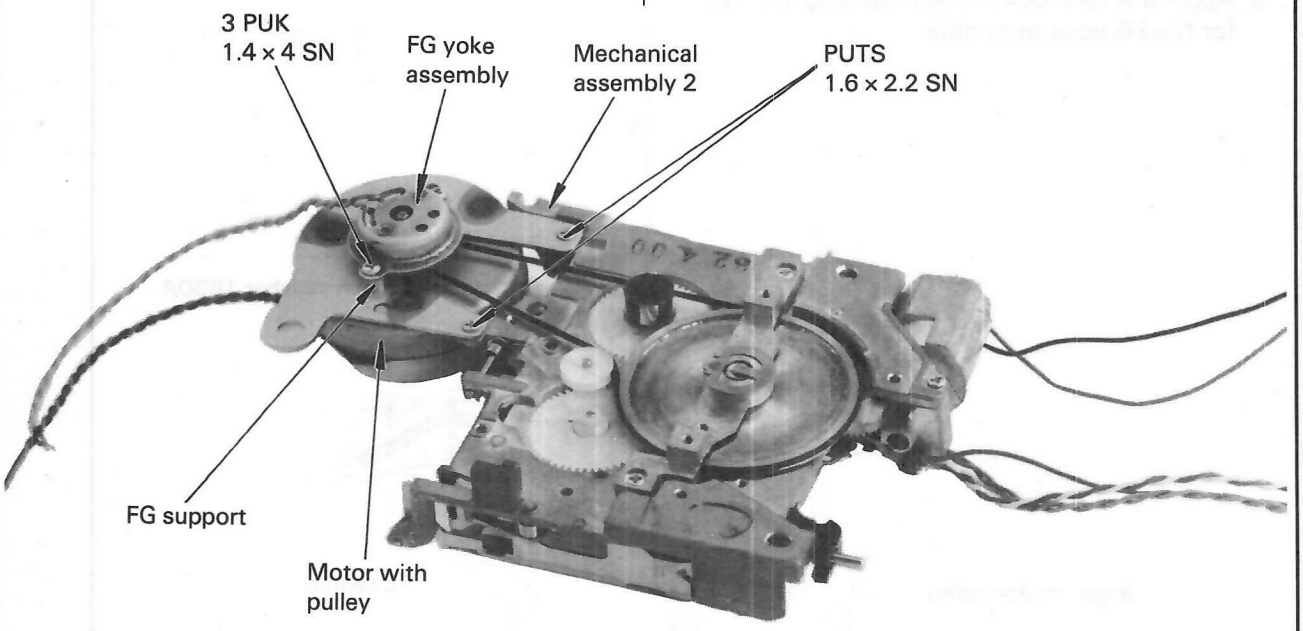

Fig. 5-45

2-2 Reassembly Procedure

Reassembly and Adjustment Procedure	Precautions for Reassembly and Adjustment
1. Install the motor. PUTS 1.6 × 2.2 SN × 2 Apply a screw lock to the tips of the screws before tightening them. 2. Place the motor belt in the V-groove around the motor pulley. Straighten the motor belt if twisted. 3. Install the FG yoke assembly. 3 PUK1.4 × 4 SN × 2 FG support × 2 4. Apply screw lock K-SM to the two screws that fasten the FG yoke assembly. PUTS 1.6 × 3.5 SN × 2	● Make sure that the FG yoke assembly is concentric with the motor shaft. (Check that the clearance between the motor shaft and tachogenerator opening is uniform.) 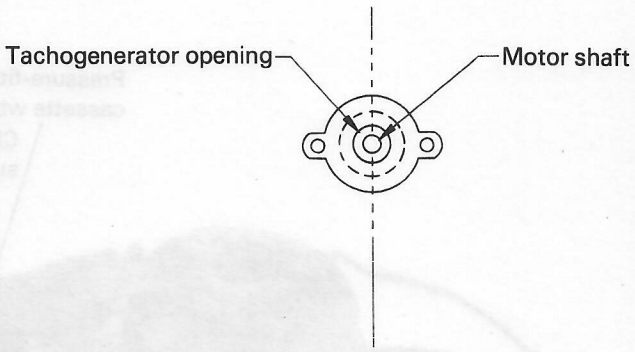 **Fig. 5-46**

3. Cassette Wheel, Idler

3-1 Disassembly Procedure

Disassembly Procedure	Disassembly Precautions
1. Remove the cassette support plate. PUTS 1.6 × 3.5 SN × 2 2. Remove the motor belt. 3. Remove the pressure-fitted cassette wheel.	● Be careful not to bend the cassette wheel shaft.

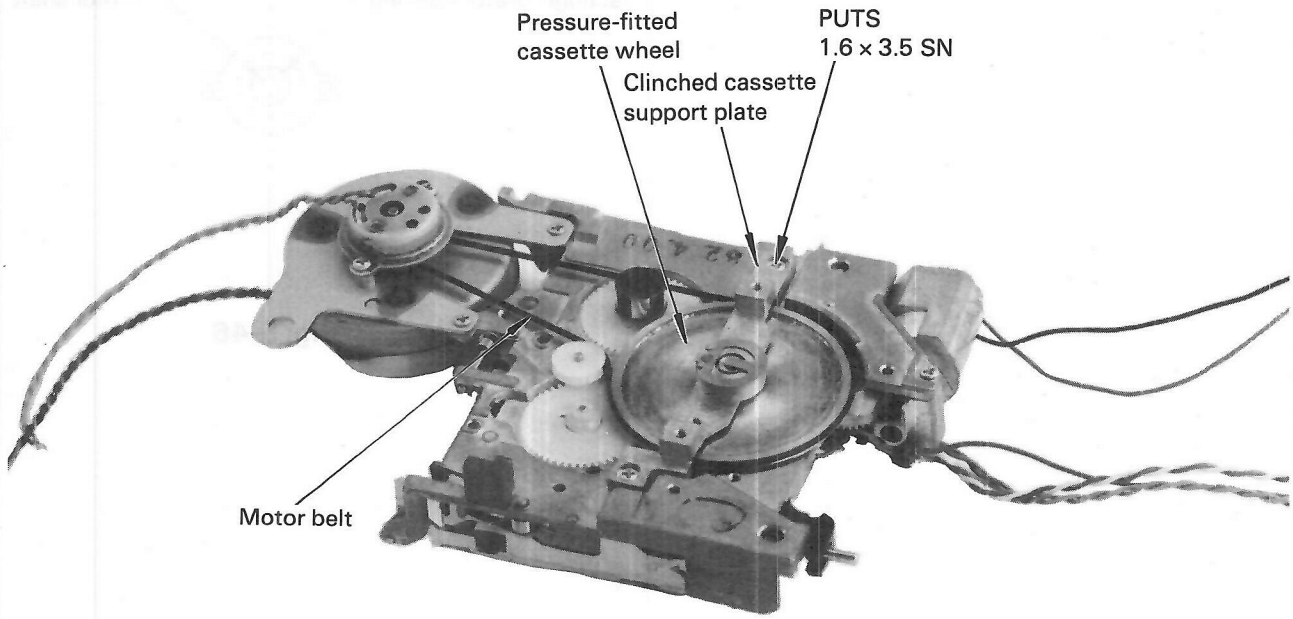

Fig. 5-47

3-2 Reassembly Procedure

Reassembly and Adjustment Procedure	Precautions for Reassembly and Adjustment
1. Pressure-fit the cassette wheel in place. 2. Place the motor belt around the cassette wheel. 3. Clinch the cassette support plate in place. PUTS 1.6 × 3.5SN × 2 4. Wipe the cassette wheel shaft to remove oil.	● The gear in the mechanical assembly is thin and not so rigid, and must be carefully turned into mesh. ● Make sure that the gear is in mesh. Turn it clockwise and counterclockwise 2 or 3 times, and see if the gear (reel) turns one way only. ● Carefully handle the shaft because it can easily bend. (Neither drop nor strain the shaft.) ● Check that the front washer hasn't come up. (The washer is transparent, and is not easy to see.)

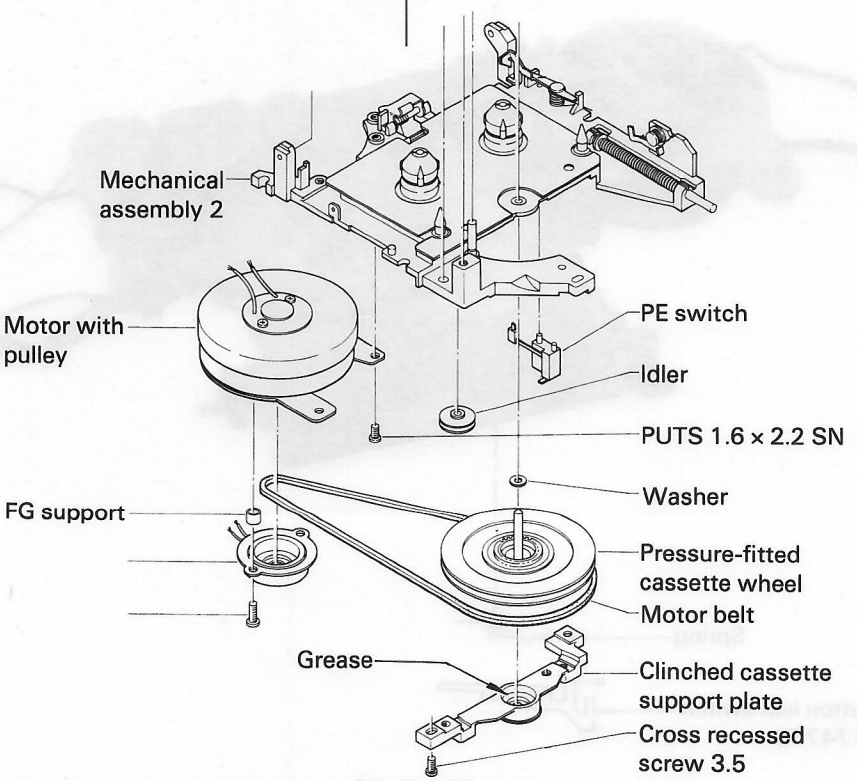

Fig. 5-48

4. PE Switch

4-1 Disassembly Procedure

Disassembly Procedure	Disassembly Precautions
1. Open the cassette pocket. 2. Remove the pocket lever and spring. ER 0.8 UO x 1 3. Remove the PE switch. Cut off the pressure-fitted part on the top with nippers, and pull downward.	

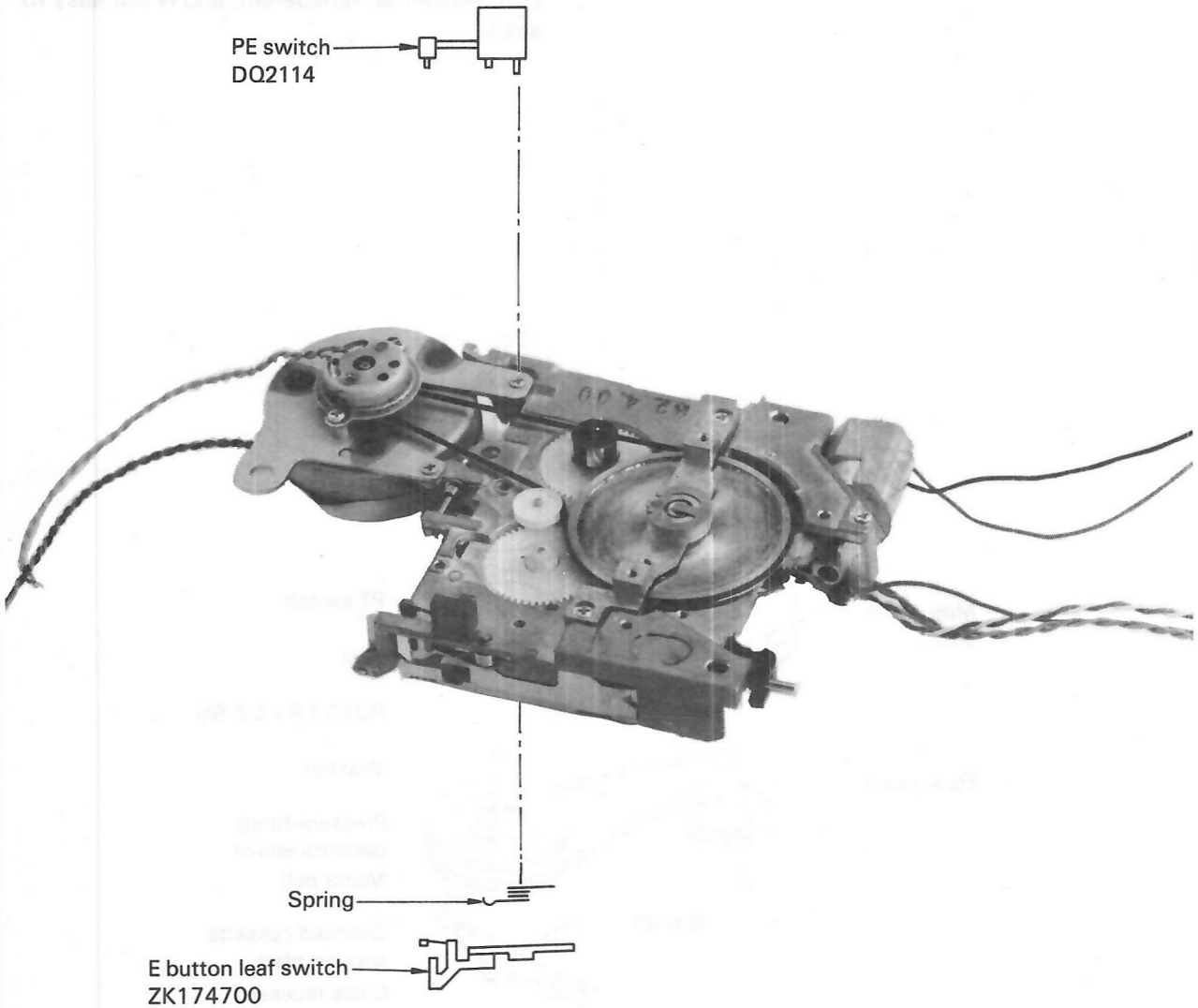

Fig. 5-49

4-2 Reassembly Procedure

Reassembly and Adjustment Procedure	Precautions for Reassembly and Adjustment
1. Install the PE switch. Bond the pressure-fitted part with an instant adhesive. 2. Install the pocket lever. ERO 0.8 UO × 1 Hook the spring. 3. Adjust the installed position.	

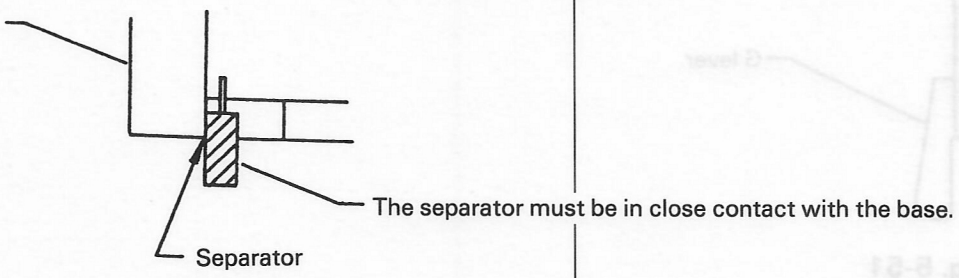

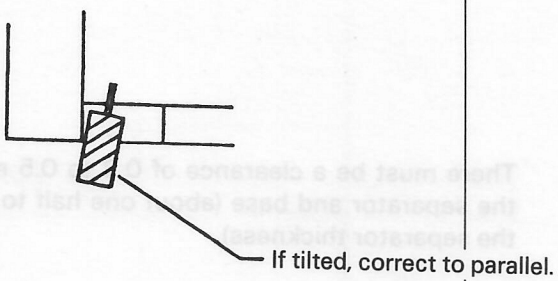

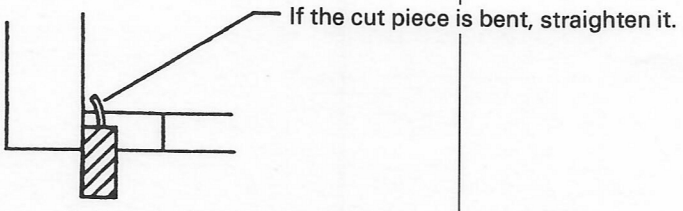

Fig. 5-50

Disassembly Procedure	Disassembly Precautions
4. Checking method. a) When a MIN cassette is inserted into place.	

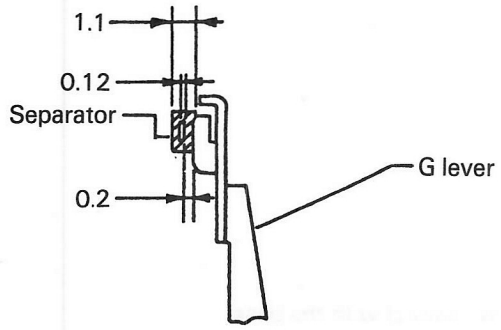

Fig. 5-51

The separator must be in contact with the base, and there must be a clearance of more than 0.2 mm between the G lever and cut piece. (About 2 cut pieces, each 0.12 mm thick)

b) When a cassette with a folded lug is inserted into place.

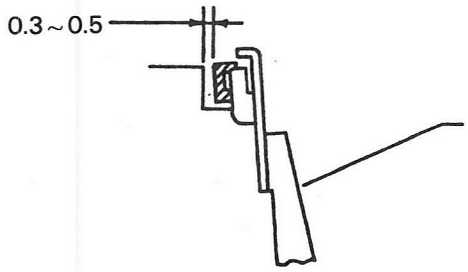

Fig. 5-52

There must be a clearance of 0.3 to 0.5 mm between the separator and base (about one half to one third of the separator thickness).

5. HP Switch

5-1 Disassembly Procedure

Disassembly Procedure	Disassembly Precautions
1. Remove the HP switch. PUK 1.6 × 2.5 SN × 1 Disconnect the brown leads.	

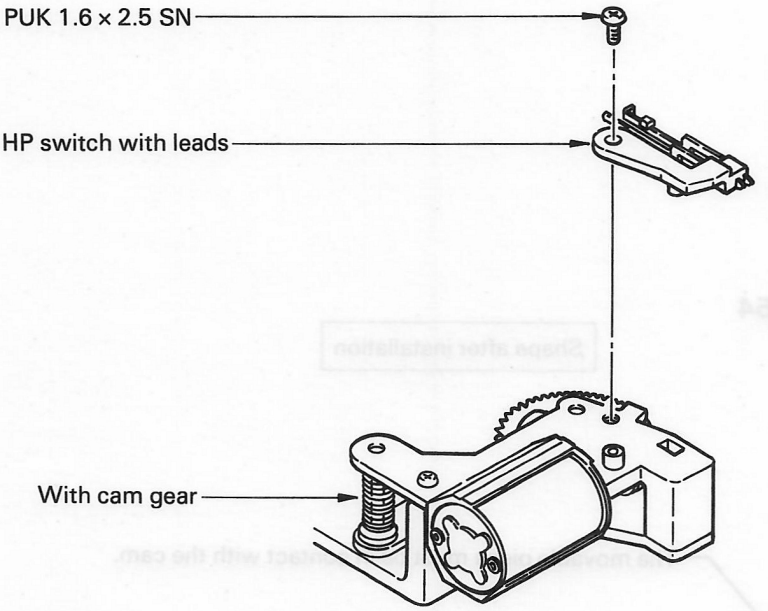

Fig. 5-53

5-2 Reassembly Procedure

Reassembly and Adjustment Procedure	Precautions for Reassembly and Adjustment
1. Install the HP switch. Connect the 2 brown leads to the HP motor. Pass them through transparent clamp tube. PUK 1.6 × 2.5 SN × 1 2. Adjust the HP switch.	

Shape before installation

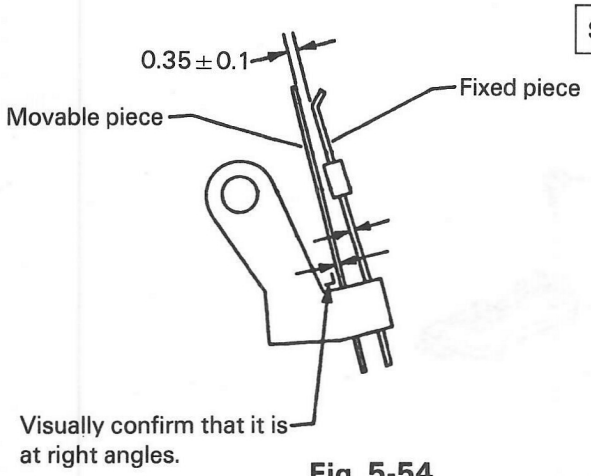

Fig. 5-54

Shape after installation

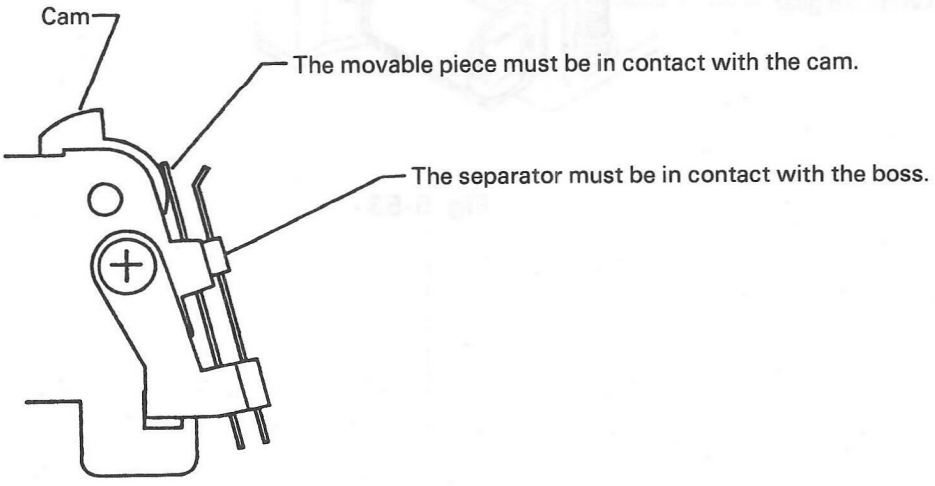

Fig. 5-55

6. HP Motor (with Cam Gear)

6-1 Disassembly Procedure

Disassembly Procedure	Disassembly Precautions
1. Disconnect the cable from the cam gear. Remove the transparent tube. 2. Remove the HP switch. PUK 1.6 x 2.5 SN x 1 3. Remove the cam gear. PUTS 1.6 x 3.5 SN x 2 (One on the front, the other on the back)	● Wipe off oil from the top surface of the cam gear. Keep it clean.

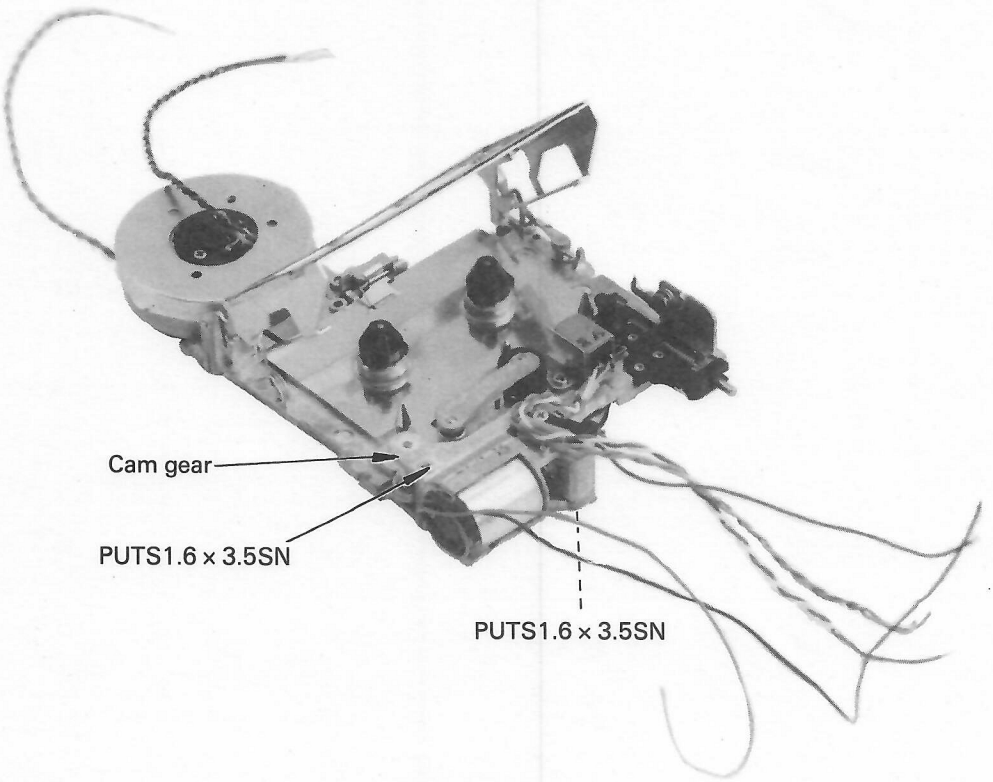

Fig. 5-56

6-2 Reassembly Procedure

Reassembly and Adjustment Procedure	Precautions for Reassembly and Adjustment
1. Adjust the cam position. 2. Install the cam gear. PUTS 1.6 × 3.5 SN × 1	● To adjust the cam position, turn the worm gear clockwise with tweezers or the like. ● Make sure that when the cam gear is installed, the cam will not ride on the die pin. ● Be careful not to pull the P lever assembly to the front because if you do so the P lever holder disengages from the bearing.

7. Pinch Roller (PR Lever Assembly)

7-1 Disassembly Procedure

Disassembly Procedure	Disassembly Precautions
1. If the HP motor and HP switch have been installed, remove them. 2. Remove the pinch roller. ER 1.2 UO x 1 PR spring x 1	● Be careful not to stain the pinch roller rubber with adhesive, oil, or grease.

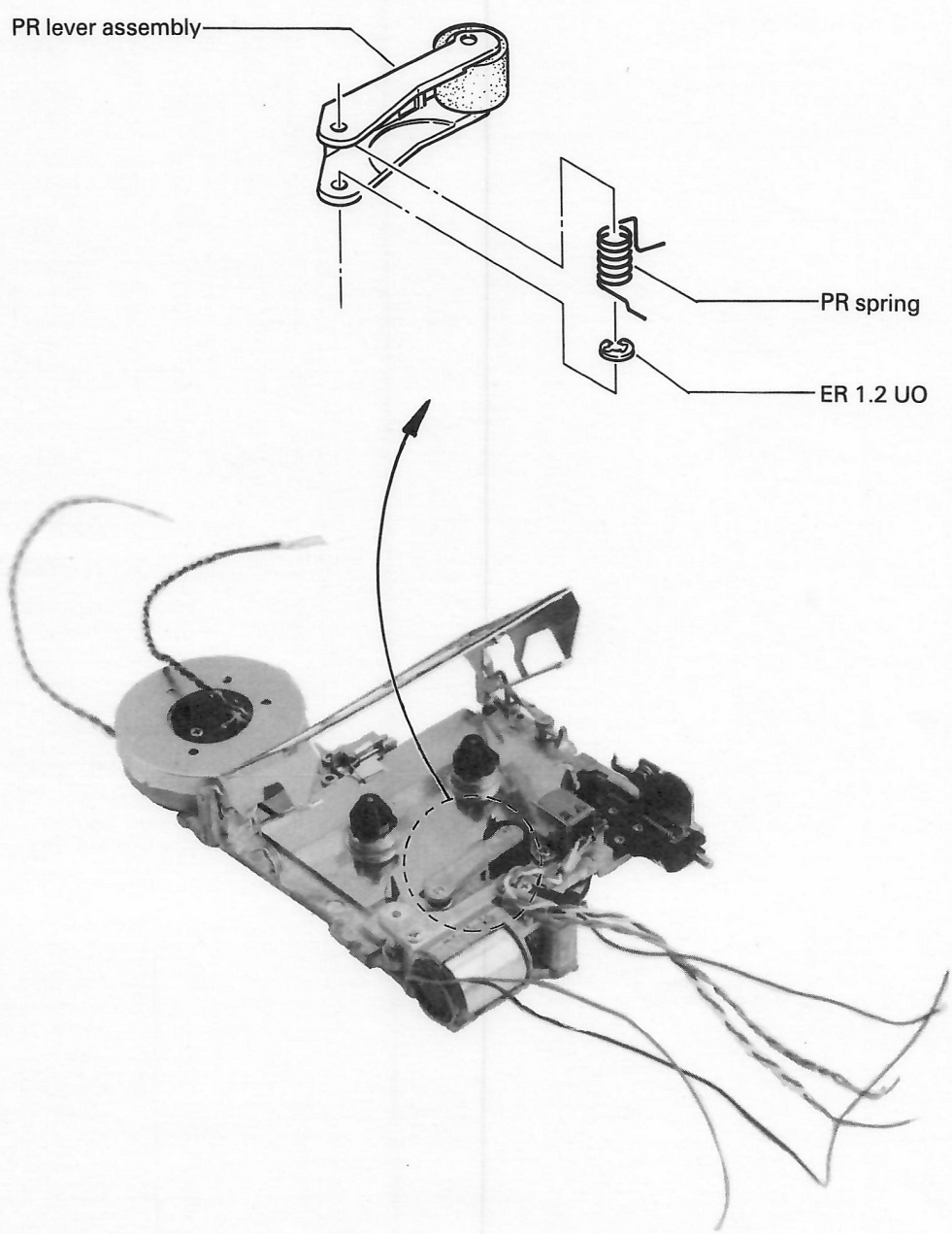

Fig. 5-57

7-2 Reassembly Procedure

Reassembly and Adjustment Procedure	Precautions for Reassembly and Adjustment
1. Install the pinch roller. PR spring × 1 ER 1.2 UO × 1 Apply grease to the PR spring.	

8. Head (P Lever Assembly 2)

8-1 Disassembly Procedure

Disassembly Procedure	Disassembly Precautions
1. Remove the P lever assembly 2.	● Remove the HP motor, HP switch and pinch roller beforehand.

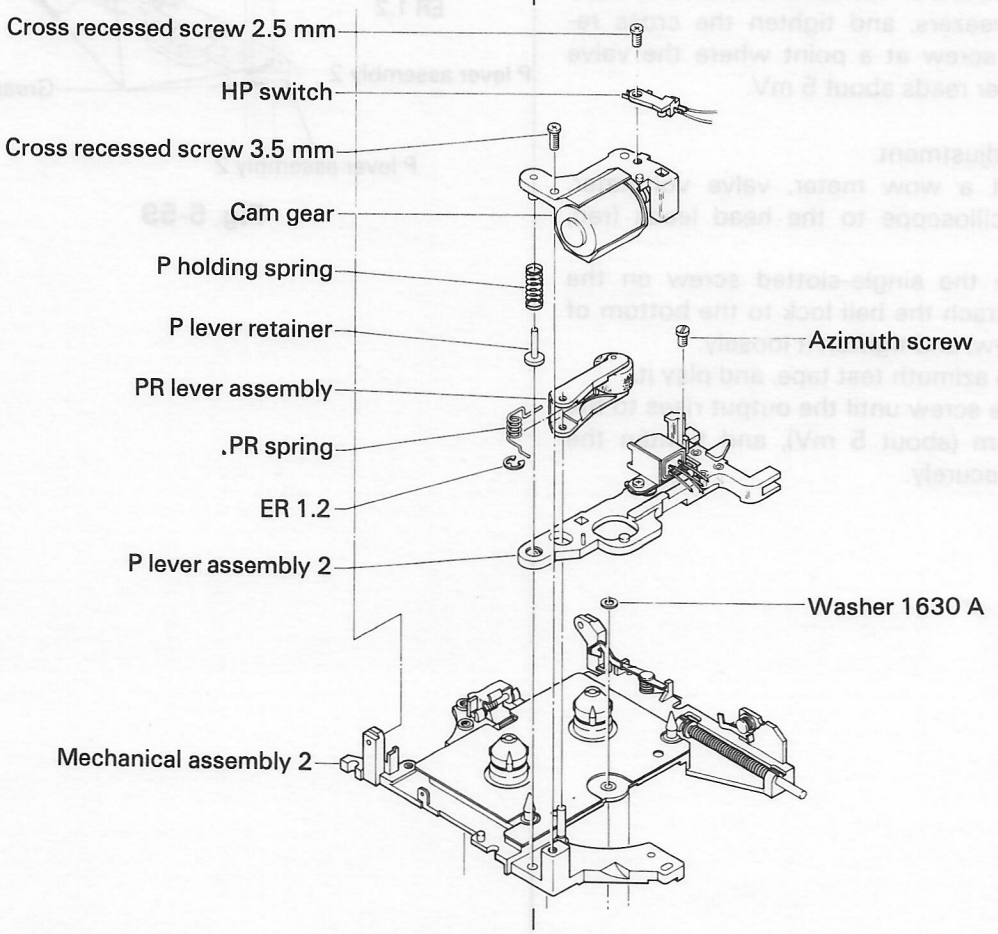

Fig. 5-58

8-2 Reassembly and Adjustment Procedure

Reassembly and Adjustment Procedure	Precautions for Reassembly and Adjustment
1. Compress the E button spring with tweezers, fit the black plastic on the right to the E button spring shaft, and fit it onto the pinch roller shaft. 2. Longitudinal head position adjustment. ● Connect a wow meter, valve voltmeter, and oscilloscope to the head leads (red, white). ● Remove the cross recessed screw on the left of the head, attach the bell lock to the bottom of the screw, and tighten the screw loosely. ● Load an uneven rotation test tape into place, and play it. ● Move the left of the head forward and back with tweezers, and tighten the cross recessed screw at a point where the valve voltmeter reads about 5 mV. 3. Azimuth adjustment ● Connect a wow meter, valve voltmeter, and oscilloscope to the head leads (red, white). ● Remove the single-slotted screw on the right, attach the bell lock to the bottom of the screw, and tighten it loosely. ● Load an azimuth test tape, and play it. ● Turn the screw until the output rises to the maximum (about 5 mV), and tighten the screw securely.	● Apply grease and adhesive to the points shown below. ● Apply grease to the E button spring. 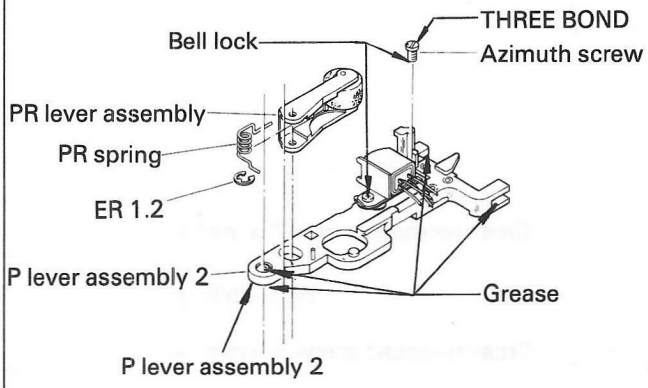 **Fig. 5-59**

9. Pocket

9-1 Disassembly Procedure

Disassembly Procedure	Disassembly Precautions
1. Remove the pocket (C pocket G subassembly). Pocket pin × 2 Pocket spring × 1 ● Push the pins inward with pliers, and pull them out. ● Remove the spring. 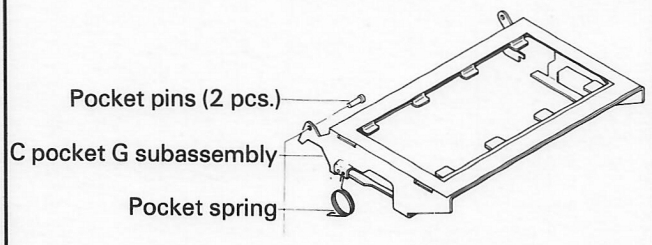 **Fig. 5-60**	

9-2 Reassembly Procedure

Reassembly and Adjustment Procedure	Precautions for Reassembly and Adjustment
1. Install the C pocket G subassembly. ● Install the spring. Pocket spring × 1 ● Install the pins. Pocket pin × 2	● Fasten the pins with an instant adhesive.

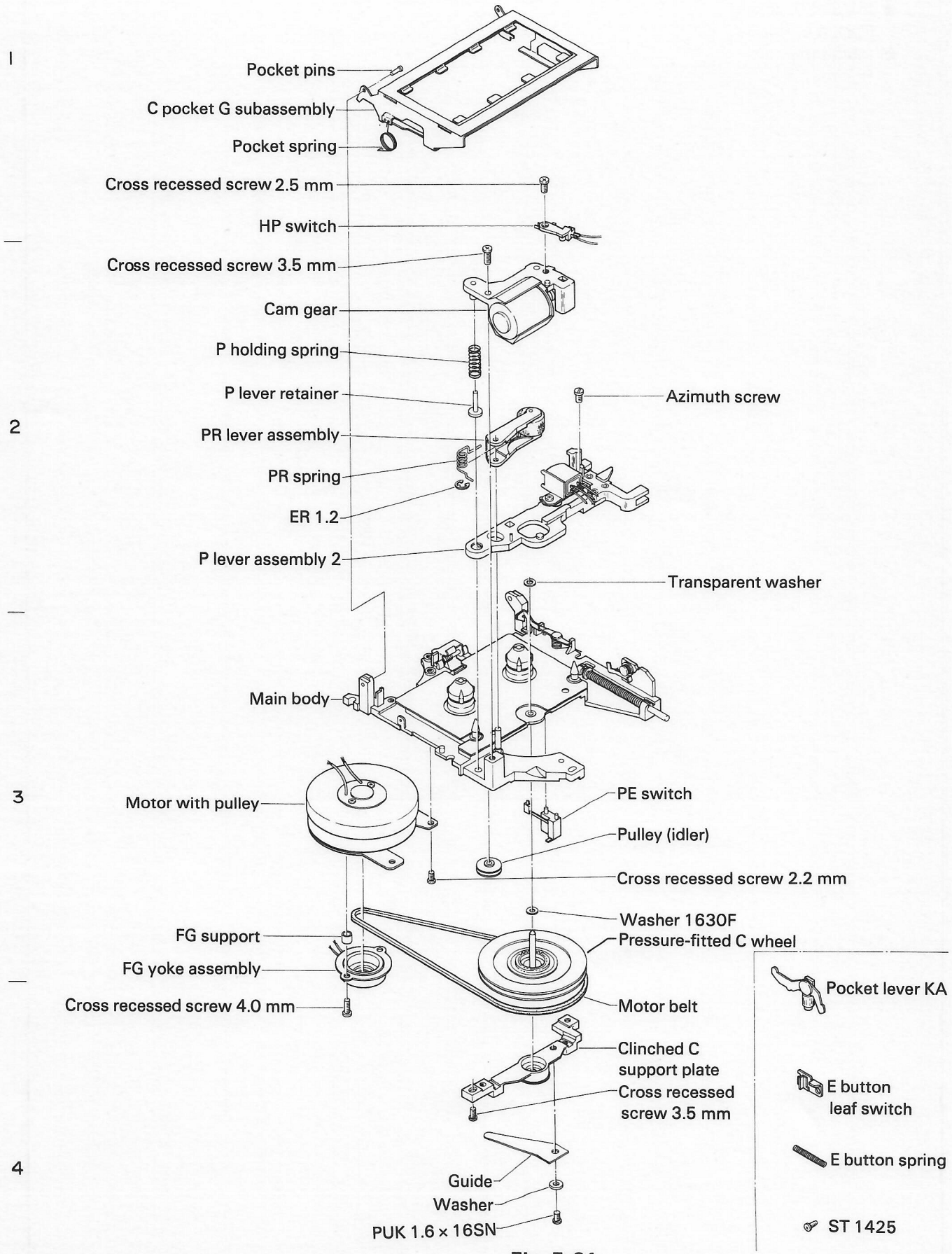
A
B
C
D
1
2
3
4
Pocket pins
C pocket G subassembly
Pocket spring
Cross recessed screw 2.5 mm
HP switch
Cross recessed screw 3.5 mm
Cam gear
P holding spring
P lever retainer
PR lever assembly
PR spring
ER 1.2
P lever assembly 2
Azimuth screw
Transparent washer
Main body
Motor with pulley
PE switch
Pulley (idler)
Cross recessed screw 2.2 mm
Washer 1630F
Pressure-fitted C wheel
FG support
FG yoke assembly
Cross recessed screw 4.0 mm
Motor belt
Clinched C support plate
Cross recessed screw 3.5 mm
Guide
Washer
PUK 1.6 × 16SN
Pocket lever KA
E button leaf switch
E button spring
ST 1425

Fig. 5-61

CHAPTER 6
MAINTENANCE AND INSPECTION

6.1 Handling 6- 1
6.2 Built-In Batteries 6- 1
6.2.1 Recharging 6- 1
6.2.2 HX-20 Recharging Method 6- 2
6.2.3 Cautions in Using AC Adaptor 6- 3
6.2.4 Batteries (Life, Replacing Method) 6- 3
6.3 Micro Printer (Model-160) 6- 4
6.3.1 Cleaning 6- 4
6.3.2 Insertion and Removal of Rolled Paper 6- 4
6.3.3 Replacement of Ribbon Cassette 6- 5
6.3.4 Handling of Printer as a Separate Unit 6- 6
6.3.5 Inspection 6- 6
6.3.6 Lubrication 6- 7
6.4 Microcassette 6- 8
6.4.1 Cleaning 6- 8
6.4.2 Head Adjustment/Speed Check 6- 8
6.4.3 Reel Torque Check 6- 8

6.1 Handling

(1) Ambient Conditions

- Avoid use and storage in a humid place because moisture can cause troubles.
- Avoid use and storage at extremely high or low temperatures, and be careful not to expose to sharp temperature change.
  (Avoid use and storage in direct sunlight or near an air conditioner or a heater.)
- Avoid use in a place where the system may be exposed to much vibration or shock.

(2) Handling

Storage and Use

- Place the HX-20 on a flat surface, such as a table or the like.
- Be careful not to place a heavy object on the machine or twist it during storage or transit.
- The HX-20 is composed of precision-made parts so do not subject it to shock, and avoid using it without the case cover. Otherwise, dust and static can adversely affect it to cause troubles.

Power Supply

- Operate the HX-20 normally on the built-in batteries. (Do not connect the AC adaptor.)
- The HX-20 can be used with the AC adaptor connected, but repeated use for a long time overcharges the batteries, resulting in a short battery life.
- The built-in batteries can discharge completely if the machine is left unused for a long period of time. If the batteries discharge completely, the programs stored in the RAMs disappears, and the batteries themselves are degraded. If the machine is unused for a long period of time, push the power switch on from time to time, and check the batteries if they operate normally and that the warning "CHARGE BATTERY!" shows on the screen.
- Refer to the "6.2 Built-In Batteries" on the attached sheet for the recharging procedure and the use of the AC adaptor.

Care

- When cleaning the HX-20, use a dry cloth and wipe it gently. Do not use alcohol or volatile solvent.
- If an option or the cable for an option is connected to the HX-20, check the connections from time to time.

6.2 Built-In Batteries

6.2.1 Recharging

The HX-20 has rechargeable nickel cadmium batteries in it. If the battery voltage falls below the required level, the warning "CHARGE BATTERY!" flashes 60 times on the LCD screen as shown at right, and then power is automatically switched off.

All operations are stopped when power is switched off. If the warning shows on the screen, immediately recharge the batteries as described below. The batteries may be recharged even if the warning appears on the screen, but repeated recharging for a long time can overcharge the batteries, possibly shortening the battery life.

* The HX-20 can be used while the batteries are being recharged.

CHARGE BATTERY!

Fig. 6-1

6.2.2 HX-20 Recharging Method

(1) Push the power switch off, and confirm that the LCD screen is completely blank. If the screen still shows something, press the reset switch.

(2) Insert the supplied AC adaptor into an electrical outlet, and insert the AC adaptor plug into the connector on the HX-20. (The batteries start to be recharged.)

(3) Recharge the batteries for 8 hours. The batteries are fully recharged in about 8 hours. If the batteries are kept being recharged for long after that, they will be overcharged, resulting in a short battery life. (The batteries are warm during recharging, but this is a normal phenomenon.)

Cautions

- Use the supplied AC adaptor for recharging the batteries, and unplug it from the electrical outlet and the HX-20 connector after use.
- If the batteries get too hot during recharging, immediately stop recharging.
- The batteries may be recharged at normal temperature (+5°C to +35°C).
- Avoid using the HX-20 with the AC adaptor connected to it. If the AC adaptor is kept connected, the batteries will be kept recharged and possibly become overcharged.
  * Overchaging can shorten the battery life and in some cases break down the batteries.
- If the batteries are fully discharged, it will deteriorate them and shorten their life. If the warning "CHARGE BATTERY!" flashes on the LCD screen, suspend HX-20 operation and recharge the batteries soon.

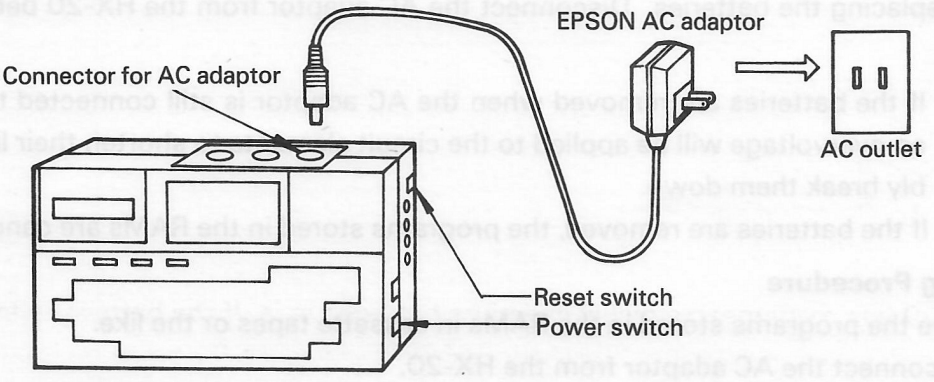

Fig. 6-2 Connection Diagram

6.2.3 Cautions in using AC Adaptor

- Use the supplied AC adaptor for recharging the batteries. If an adaptor other than the supplied AC adaptor is used, it can deteriorate the batteries and circuit parts, and possibly damage them.
- Use an AC outlet of the voltage specified on the supplied AC adaptor.
- Do not connect the AC adaptor if the batteries are removed from the HX-20. It causes an overvoltage to deteriorate or damage the circuit elements.
- Keep the AC adaptor disconnected from an AC outlet and the HX-20 except when recharging the batteries.
- Do not use the supplied AC adaptor for other than the HX-20. The device to which the AC adaptor is connected or the AC adaptor itself can become damaged due to the differences in voltage and current between them.

6.2.4 Batteries

(1) Monitoring battery voltage

The battery voltage is monitored when power is switched on and during HX-20 operation, and if the voltage falls below the required level (about 4.5V), the warning "CHARGE BATTERY!" immediately flashes on the LCD screen. After 60 times of its flashing, power is automatically turned off.

* The programs are stopped and the HX-20 cannot be used under this condition.

Steps to Be Taken

Immediately push the power switch off, connect the supplied AC adaptor, and recharge the batteries. If the batteries are not recharged, the programs stored in the RAMs can disappear.

(2) Battery life

The nickel cadmium batteries normally have a life of 3 years, though it varies with ambient temperature, recharging duration and time. Replace the batteries with new ones soon after the end of their life.

If the batteries last very short after they are recharged, replace them with new ones.

(3) Battery replacing method

If programs are stored in the RAMs, save them in microcassettes or audio cassettes before replacing the batteries. Disconnect the AC adaptor from the HX-20 before replacing them.

Notes 1: If the batteries are removed when the AC adaptor is still connected to the HX-20, an overvoltage will be applied to the circuit elements to shorten their life and possibly break them down.

2: If the batteries are removed, the programs stored in the RAMs are cancelled.

Replacing Procedure

1) Save the programs stored in the RAMs in cassette tapes or the like.
2) Disconnect the AC adaptor from the HX-20.
3) Remove the case cover from the HX-20. Remove the 7 screws and the FPC cable for the cartridge option.
4) Remove the battery holding plate that holds the batteries in place. (1 screw)
5) Disconnect the battery connector from the control cirucuit board.
6) Remove the batteries, and insert new batteries.

* Take Steps 4, 5 and 3 in this order for installing the new batteries.

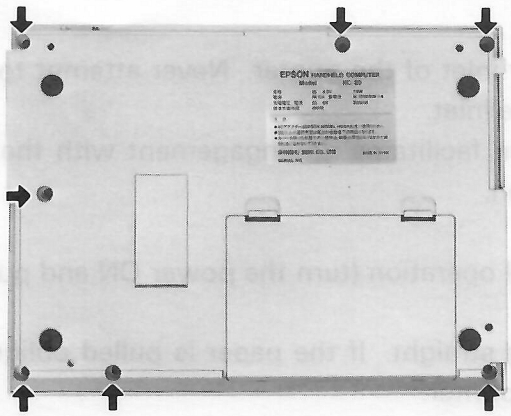

Back

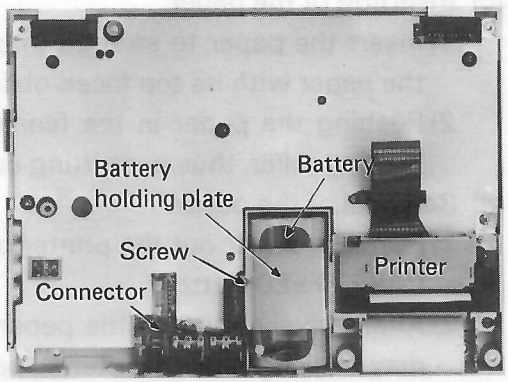

Inside of lower case

Fig. 6-3

6.3 Maintenance of Micro Printer (Model-160)

Proper maintenance is essential for the EPSON Micro Dot Printer Model-160 to keep its designed performance for the longest possible period, and to prevent the occurence of trouble. Carry out maintenance according to the following instructions:

6.3.1 Cleaning

(1) Removal of dirts and stains:
Remove any dirts and stains using alcohol or benzine.

Note:
Never employ thinner nor trichloroethylene-or ketone-based solvents, which might deteriorate plastic parts.

(2) Removal of paper particles, dusts and naps:
To remove any paper particles, dusts and naps from the surface and inside of the printer, it is recommended that a vacuum cleaner be used.

Note:
After cleaning, check the lubrication points for quantity of lubricant. If the removal of paper particles, dusts and naps has resulted in insufficient quantity of lubricant, resupply the specified lubricant as required. (Refer to "Lubrication Requirements".)

6.3.2 Insertion and Removal of Rolled Paper:

(a) Be sure to use the specified paper
(b) Before passing the paper into the printer, cut squarely the top of the paper.

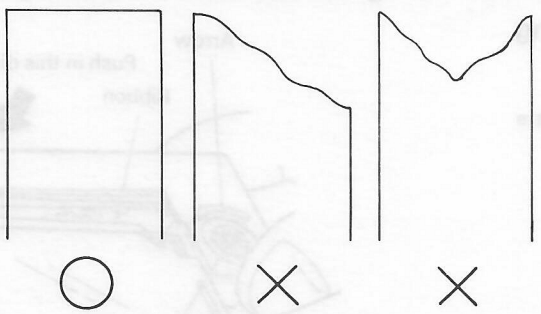

Fig. 6-4 Processing of Paper Top for Insertion

(c) Insertion of the paper:

1) Insert the paper to straight into the paper inlet of the printer. Never attempt to insert the paper with its top faced obliquely to the inlet.

2) Pushing the paper in the feeding direction facilitates its engagement with the paper feeding roller, thus permitting easy insertion.

(d) Removal of the paper:

1) Feed the paper out the printer by electrical operation (turn the power ON and push the PAPER FEED button).

2) Alternatively, remove the paper by pulling straight. If the paper is pulled obliquely, it may be caught by the internal parts of the printer.

6.3.3 Replacement of Ribbon Cassette

(a) Be sure to use the specified ribbon cassette.

Note:

The ribbon cassette is of the throw-away type; replenishment of ink is absolutely impossible.

(b) Replacing procedure:

1) Push down the cassette at one end marked "PUSH" until the other end is disengaged.

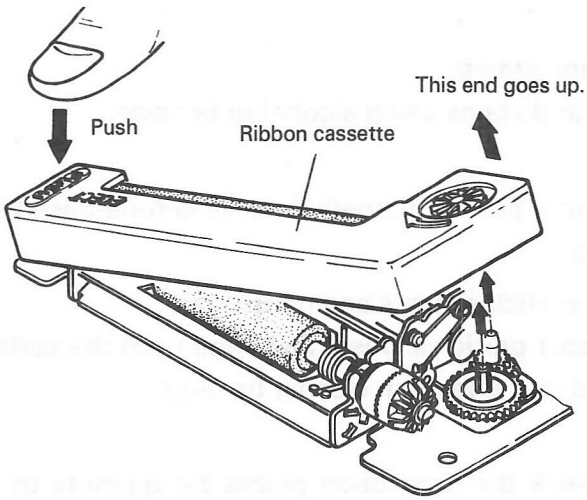

Fig. 6-5 Removal of Ribbon Cassette

(c) In setting the new cassette into position, pay attention to the following points:

- Prior to setting the cassette (as well as to removing it), be sure to remove the paper from the printer.
- Before placing the cassette, turning the button at one end in the direction of the arrow until the ribbon becomes tense (Fig. 6-6).
- Turning the button also during the operation of placing the cassette on the printer facilitates the setting.

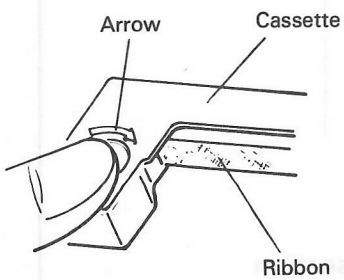

Fig. 6-6

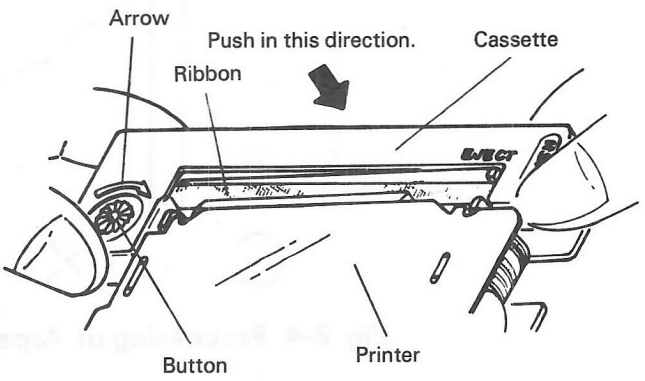

Fig. 6-7

- After placing the cassette, give two or three turns to the button.
- Finally, check the condition of the ribbon.

6.3.4 Handling of Printer as a Separate Unit

(a) Carrying:

1) When carrying the printer as a separate unit, be careful not to hold by the FPC (flexible printed cable), the patterns on the circuit board, the ribbon cassette nor the gears (see Fig. 6-8).

2) Be careful that the printer not be subjected to shock from fall onto the floor or collision against other objects or printers.

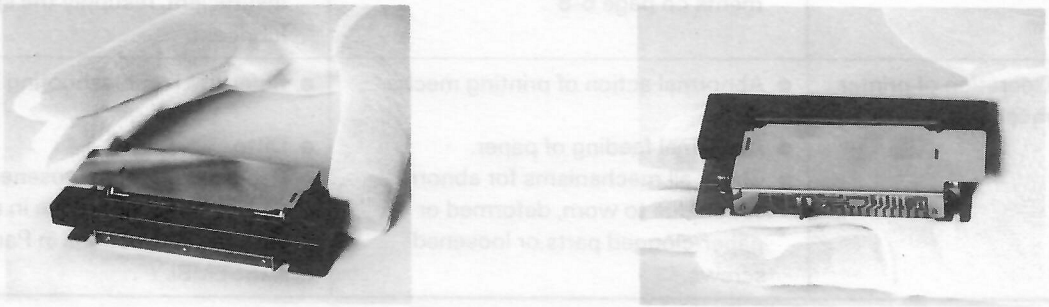

Fig. 6-8 Handling of Printer as a Separate Unit

(b) Storage:

1) Avoid storing the printer in a very dusty or humid place or in a place subject to direct sunlight.

2) When the printer is to be stored for a relatively long period of time, wrap in anticorrosive paper (VPI paper), place in a polyethylene bag and store in a dry place.

(c) Cautions in using:

1) Since this printer uses permanent magnets (in detectors) and electromagnets, avoid using it in a place where a nonnegligible amount of iron dust exists, or in a very dusty place.

2) Never operate the printer with the printing paper not being in position.

3) Since a reed switch is used for the reset detector, never place any magnetic equipment within the range of 7 mm from the top cover to prevent the reed switch from being subject to its adverse effect.

6.3.5 Inspection

Have the printer inspected by such persons every six months for the check items given in the table below and have the necessary maintenance actions performed.

Check item	Condition to be remedied	Action
1) Deposit of dust, dirt and/or nap	● Too much deposit of dust, dirt and/or nap; presence of foreign matters inside the printer. ● Presence of torn pieces of paper or foreign matters in and/or on paper guide. ● Deposit of dust, dirt and/or nap on detectors.	● Such materials can effectively be removed with vacuum cleaner. ● Removal all such materials. ● Remove.
2) Condition of spring	● No deformation	● Replace deformed springs
3) Lubrication	● Refer to "Lubrication Requirements on page 6-8".	● Quantity of lubricant being found insufficient, resupply the specified lubricant.
4) Operation of printer mechanism	● Abnormal action of printing mechanism. ● Abnormal feeding of paper. ● Check all mechanisms for abnormal action due to worn, deformed or paper-clogged parts or loosened screws.	● Refer to "Troubleshooting Table". ● Ditto. ● Replace; retighten loosened screws, if any, to specified torque in accordance with the instructions in Par. 3.2 "ASSEMBLY".

6.3.6 Lubrication

Proper lubrication is essential for the EPSON Micro Dot Printer Model-160 to keep its designed performance for the longest possible period, and to prevent the occurrence of trouble. Carry out lubrication according to following instructions:

(1) Lubricants

The properties of lubricants used have a great influence on the performance and durability of the printer. In particular, attention must be paid to the low temperature characteristics. It is strongly recommended to use only those lubricants that EPSON has selected after an extensive study of technical information and a series of tests on many types of lubricants.

EPSON can supply such lubricants in a metallic can or a plastic container of 40 cc (40g), which is the minimum supply unit available.

Remarks:

The number of Model-160 Printer units for which 40 cc of lubricant is sufficient is as follows:

Lubricant	Number of printer units
G-2	Approx. 100

(2) Lubrication Requirements

The lubricant to be used for the Model-160 Printer is G-2. Supply the specified quantity of G-2 to the lubrication points indicated in the table below. Prior to application of lubricant, be sure to thoroughly clean the printer elements or parts concerned.

(3) Lubrication Points

The Ref. Nos. in the table below correspond to the Nos. used in Fig. 6-9.

The application quantity of lubricant increases with the number of black points (●).

Ref. No.	Lubrication points	Lubricant	Application quantity
L-1	Part to receive spool gear shaft	G-2	●●
L-4	Lead cam internal gear (whole perimeter)		●●
L-5	Lead cam groove (whole perimeter)		●●●
L-6	Contacting parts of cam shaft and cam shaft bearing		●●
L-7	Tip of push rod (four points)		●
L-8	Circumference of plunger (four points)		●
L-9	Contacting parts of printing lever and its shaft		●●
L-10	Engagement parts of printing lever and its spring	G-2	●
L-11	Contacting parts of print head carriage and print head guide shaft (two points on R side)		●●●
L-12	Contacting parts of print head carriage and print head guide shaft (two points on L side)		●●●
L-13	Contacting parts of paper holding spring and paper holding roller spring (two points)		●
L-14	Part to receive paper feeding roller shaft on R side		●●
L-15	Contacting parts of paper feeding roller shaft and its bearing		●●
L-16	Contacting parts of paper feeding roller shaft and one-way spring		●●
L-17	Engagement parts of paper feeding lever pin and paper feeding gear		●
L-18	Contacting parts of paper feeding lever shaft and paper feeding		●●●
L-19	External toothed part of ribbon feeding cam (whole perimeter)		●●
L-20	Internal cam part of ribbon feeding cam (whole perimeter)		●●●
L-21	Contacting parts of paper feeding lever spring and paper feeding lever		●●
L-22	Reduction gear		●●
L-23	Part of holder to receive motor gear		●
L-24	Contacting parts of head cam and frame L		●●
L-25	Intermediate gear (large and small)		●●

Note: Oil quantity ● ..... less
●● ..... ordinary
●●● ..... much

(4) Carry out periodic lubrication on every occasion of overhaul of the printer and every 500,000 lines printed. Lubrication must also be performed when the quantity of lubricant at any lubrication point has become insufficient as a result of cleaning of the printer parts concerned and on the occasion of disassembly or replacement of the parts concerned.

6.4 Microcassette

6.4.1 Cleaning

If the microcassette is used for a long time, the parts exposed to the cassette tape become stained, causing read/write troubles. Clean those parts (1), (2) and (3) with a tape head cleaner solution or alcohol.

(1) Surfaces of the read/write head
(2) Capstan shaft
(3) Pinch rollers

6.4.2 Head Adjustment/Speed Check

If the read/write head is worn, head signal output level falls. Use a 3 kHz azimuth tape, and make an adjustment so that the output level of signals from the R/W head will be maximum. Also check the 3 kHz period and speed variation.

6.4.3 Reel Torque Check

Use a torque check tape, and confirm that the torque is as specified (7g ±2g).

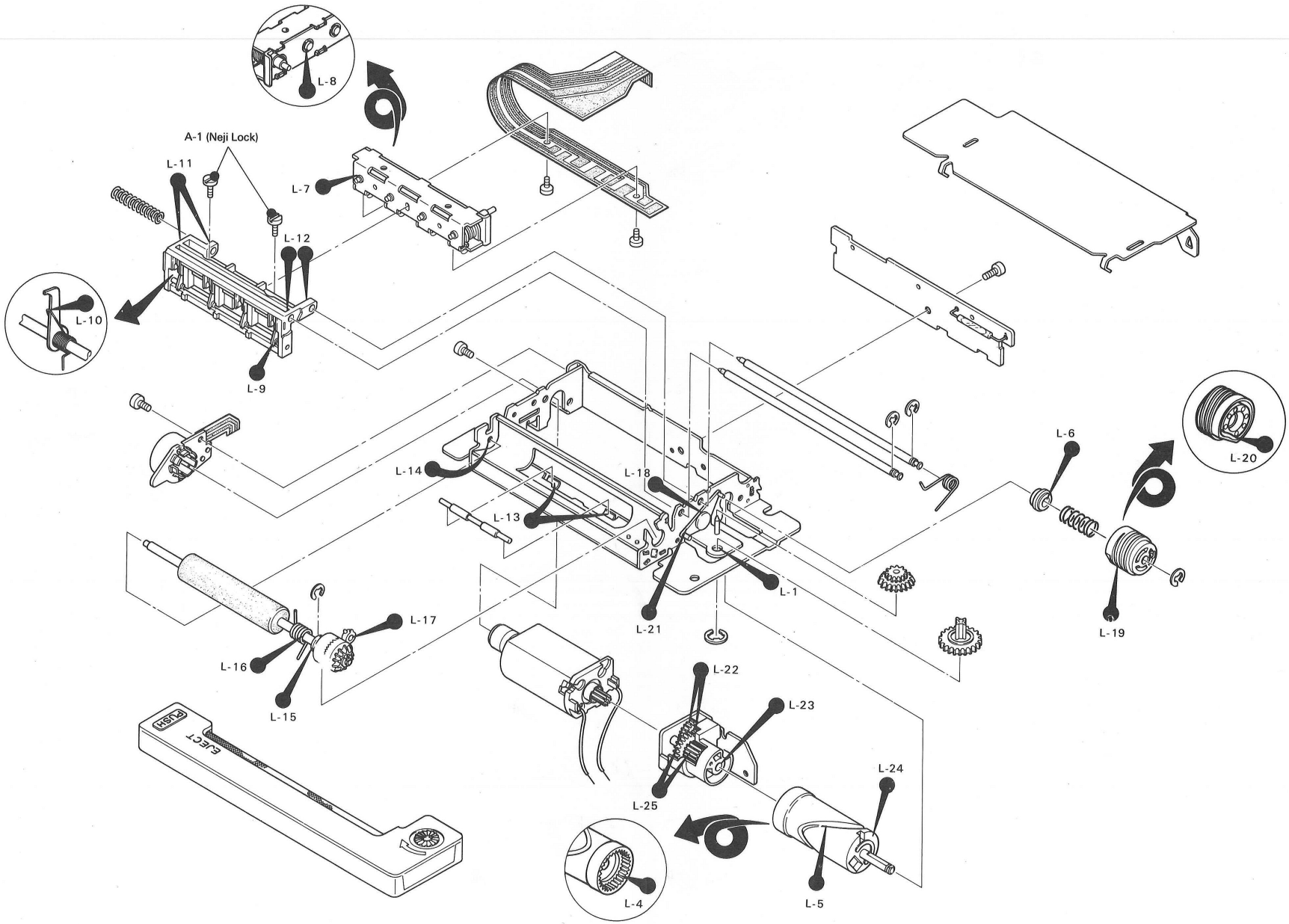

Fig. 6-9 Lubrication Points

Fig. 6-9 Lubrication Points

CHAPTER 7
REPAIRS

7.1 Repairs 7- 1
7.2 Repair Tools and Instruments 7- 2
7.2.1 Tools and Instruments 7- 2
7.2.2 Test Items 7- 3
7.2.3 Oil, Grease and Chemicals 7- 3
7.3 Soldering 7- 4
7.3.1 Parts Removal and Installation 7- 4
7.3.2 Soldering 7- 4
7.3.3 Unrepairable 7- 6
7.3.4 After Repairs 7- 6
7.3.5 Terms 7- 7
7.4 MOSU Circuit Board Repairs 7- 7
7.4.1 Circuit Board Setting Methods 7- 7
7.4.2 Check Terminals 7- 9

7.1 Repairs

Before starting repairs

(1) Static electricity

- Human bodies carry the static generated by friction of the clothes, etc. If a man with a static charge touches circuit elements with his fingers, for example, the static can break down the elements. Before starting repairs, touch the case cover with both hands to discharge the static that you may have in the body.
- When using an oscilloscope or other instrument whose ground terminal must be grounded, contact the conductive part of the ground terminal with the casing of the HX-20 or your fingers, and then connect it to the GND terminal on the circuit board.

(2) Circuits

- Even if the power switch is pushed off, the RAMs and some of the ICs are backed up by the batteries. When conducting a continuity test on circuits, disconnect the battery connector and wait for about 30 seconds before starting the test.
- Follow the same procedure when replacing circuit elements on the control circuit board.

(3) Cables

The HX-20 uses FPCs (flexible printed cables), which can break if folded, bent, or damaged. Exercise good care when handling the cables.

(4) Connectors

All the internal cable connectors used for the HX-20 are a lock type. When disconnecting the cables, unlock the connectors before.

(5) Soldering

Refer to the section on soldering before making repairs on the circuit boards.

7.2 Repair Tools and Instruments

7.2.1 Tools and Instruments

No.	Tool/Instruments	Spec.	Use	Commercial available
1	Oscilloscope	50 MHz 2-channel	Control circuit board repair	Yes
2	Digital voltmeter	5V range, 3 digits	Battery voltage measurement	Yes
3	Multi-tester	Resistance	Continuity test, element check	Yes
4	Electric soldering iron	100V 15W	Control circuit board repair	Yes
5	Solder wick (or pump)		Removing (unsoldering) elements from circuit board	Yes
6	Nippers	Midishure 1178 made by EPE	Removing (unsoldering) elements from circuit board	Yes
7	Philips screwdriver No. 2	100 mm		Yes
8	Tweezers	MM 125 mm		Yes
9	ET holder No. 1.2	ETH 1.2	Microprinter repair	Yes
10	ET holder No. 1.5	ETH 1.5	Microprinter repair	Yes
11	ET holder No. 2	ETH 2	Microprinter repair	Yes
12	Philips precision screwdriver set		Microcassette repair	Yes
13	Regular precision screw-driver set		Microprinter repair	Yes
14	Pliers	No. 0	Microprinter repair	Yes
15	Brush (medium)		Microprinter repair	Yes
16	Brush (fine)		Microprinter repair	Yes
17	Stick tension gauge	200g	Microcassette repair	Yes
18	Solder		Control circuit board repair	Yes
19	Safety goggles		Protection during soldering and use of oil, grease, chemicals	Yes
20	Gloves		Soldering	Yes

7.2.2 Test Items

No.	Item	Spec.	Use	Commercial available
1	Test program ROM	2764	HX-20 function test	No
2	Extension cable (20-conductor)	FPC cable with connector	Extension cable between MOSU circuit board and KB connector	No
3	Extension cable (14-conductor)	FPC cable with connector	Extension cable between KB and LCD	No
4	Test tape (Azimuth)	Olympus OA-A211	Adjustment for AZIMUTH	Yes
5	P-reel torque check cassette	SONY TW-1112A	Microcassette winding torque measurement	Yes

7.2.3 Oil, Grease and Chemicals

No.	Item	Spec.	Use	Commercial available
1	Grease	G2	M-160 repair	No
2	Screw lock	Three Bond No. 1406	M-160 repair	Yes
3	Grease	Nippon Koyu Photolube 023P	Microcassette	Yes
4	Oil	Maruzen Oil Swafluid No. 56	Microcassette	Yes
5	Anaerobic adhesive	Kanebo Veil Lock K-SM	Microcassette	Yes
6	Screw lock	Three Bond No. 1401B	Microcassette	Yes
7	Instant adhesive	Cemedyne 3000RP or Arron Alpha (Toa Synthetic Chemicals)	Microcassette	Yes
8	Rubber adhesive	Cemedyne High Contact or EC-1770 (3 M's)	Microcassette	Yes
9	Solvent	Ligroin (Nippon Oil)	For cleaning various parts	Yes

7.3 Soldering

7.3.1 Parts Removal and Installation

(1) When removing an IC or transistor from a circuit board, it is necessary, as a rule, to cut off its leads with nippers and unsolder the part. (Reason: To prevent lengthening of solder melting time due to heat absorption by the part.)

(2) Solder parts as quickly as possible. In some cases, a cooling agent may have to be used to prevent the parts from overheating. (Reason: To protect the parts and circuit board)

(3) When removing parts, remove the solder adhering to the through-holes and lands, and remove the leads without using undue force. (Reason: If the leads are forcibly pulled out, the lands or printed pattern can be stripped.)

(4) When installing parts, be careful of the lead bending direction and lead length so that the leads will not contact other lands on the back of the circuit board. (Reason: To prevent short circuit on the back)

(5) When install a register on a circuit board, make sure that the parts are not in direct contact with the circuit board surface. (Reason: To protect the circuit board from damage due to the heating of the parts)

(6) When using a wire for repair, make it as short as possible. If the leads of other parts stand in the shortest route, select other route.

- If a long wire must be used, bond it to the circuit board surface with an epoxy adhesive.
- Do not lay a wire parallel to a printed pattern over a long distance. (Reason: To prevent noise)
- Wind the wire around the part lead.

7.3.2 Soldering

(1) Through-hole soldering

a) Solder part leads as shown in the center of the below sketch. (Solder builds up about 30° to 45° to the land.)

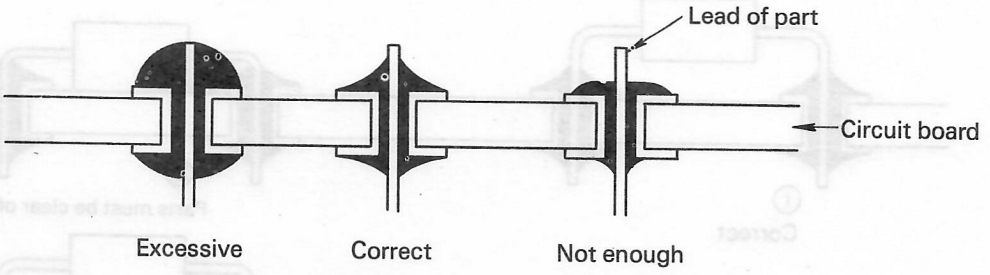

Fig. 7-1

b) Through-holes must be fully filled with solder.

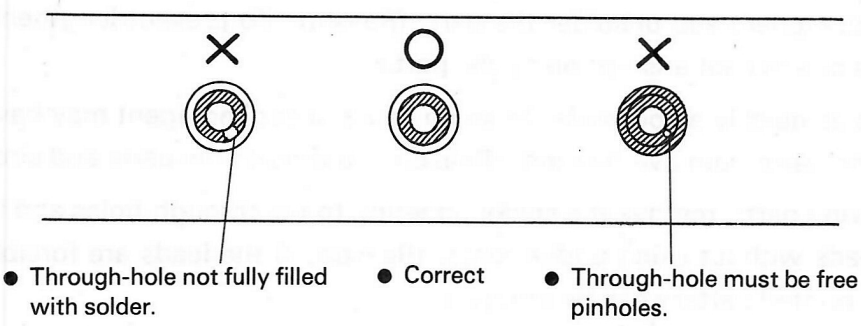

● Through-hole not fully filled with solder.

● Correct

● Through-hole must be free of pinholes.

Fig. 7-2

c) Leads must be of proper length, and clear of other lands.

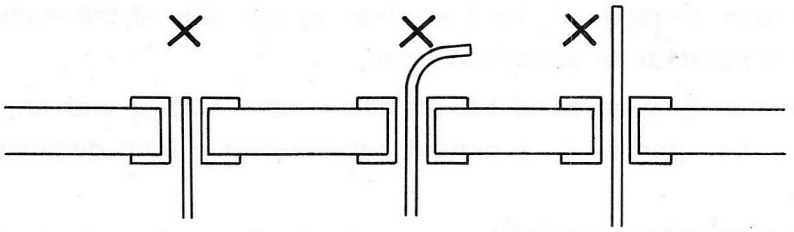

● Lead end must be out of through-hole
Must be more than 3/4 filled.

● Leads must not normally be bent.

● Leads must not be too long.

Fig. 7-3

(2) Parts Installation

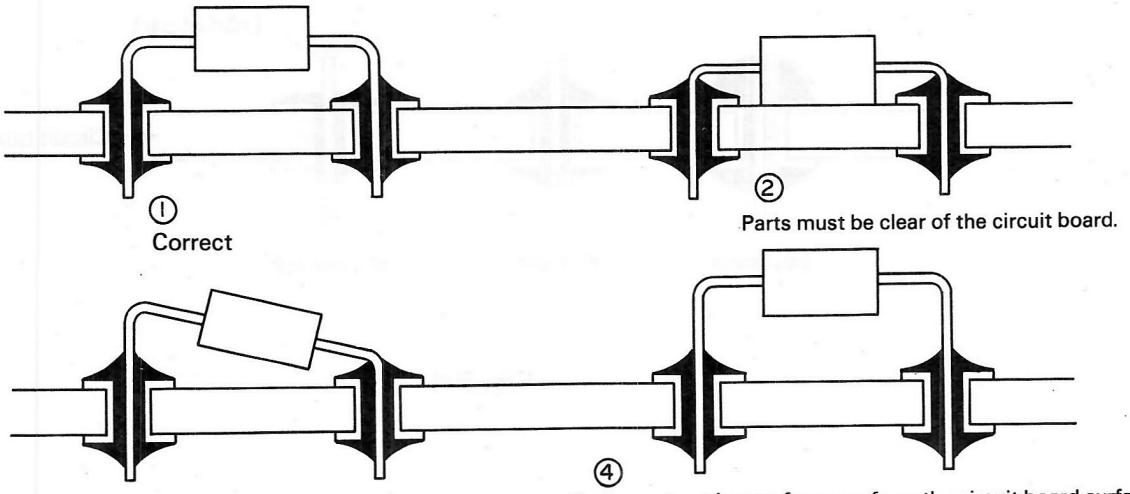

① Correct

② Parts must be clear of the circuit board.

③ Parts must be installed parallel to the circuit board surface. (Allowable limit: 30°)

④ Parts must not be too far away from the circuit board surface (to prevent shortcircuit with other parts).

Fig. 7-4

(3) Wire connection

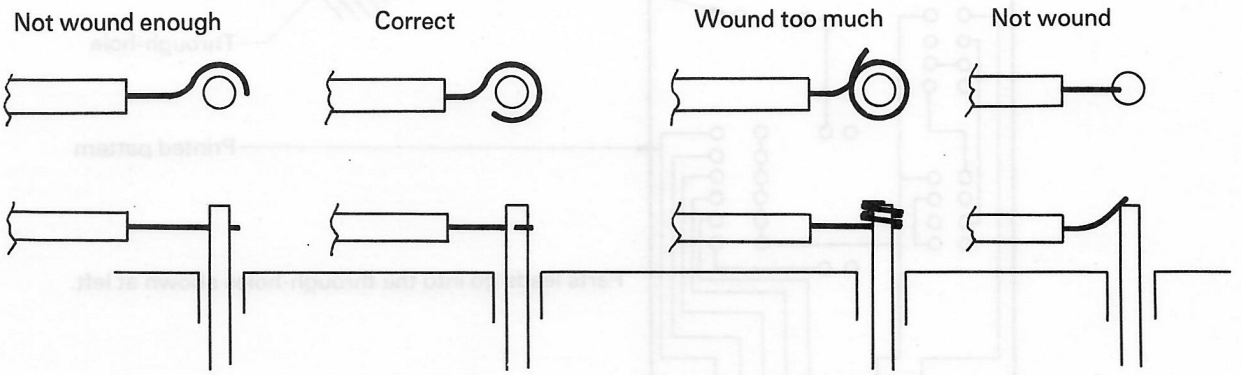

Fig. 7-5

- Wind wire more than 3/4 of a turn or about a turn around leads (IC pins).
- Wire ends must be covered to a point near the land. Exposed wire ends must be less than one half the land length.

7.3.3 Unrepairable

Dispose of the following without repairing because quality and durability problems remain even if repairs are attempted.

- Through-hole with peeled copper lining
- Peeled land
- Peeled printed pattern
- Burnt circuit board
- Cracked circuit board

* Replace the circuit board itself if it has any of the above defects.

7.3.4 After Repairs

Take the following steps after repairing (soldering).

- Completely wipe off the flux from soldered points with a brush or the like.
- If patterns are touched by hand, wipe them clean.
- Wipe the connectors clean, and apply a contact lubricant where necessary.
- Dry.

* If the above steps are not taken, the patterns can corrode due to oxidation, which causes troubles.

7.3.5 Terms

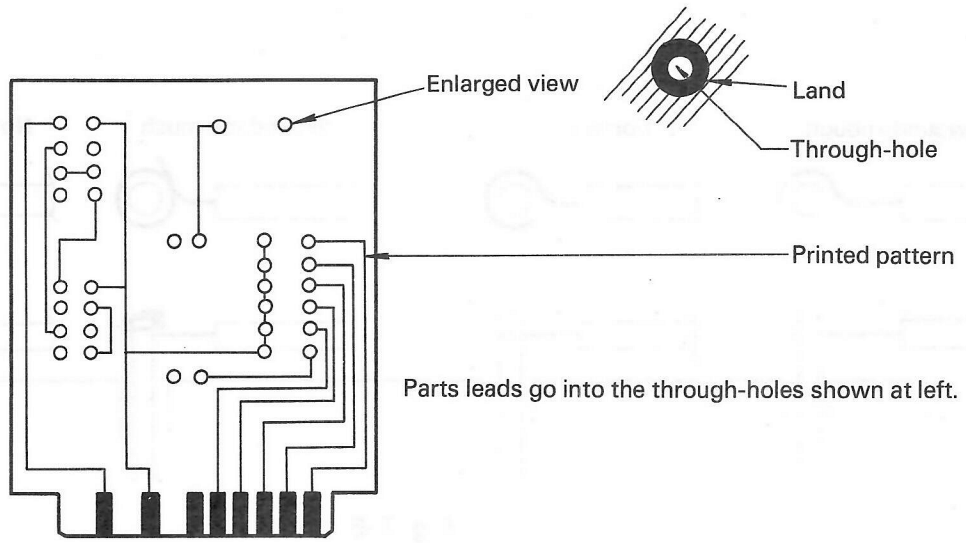

Fig. 7-6 Front of Cicuit Board

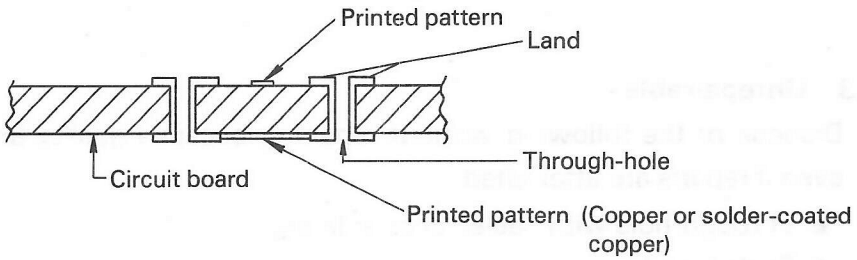

Fig. 7-7 Cross Section of Circuit Board

7.4 MOSU Circuit Board Repairs

7.4.1 Circuit Board Setting Methods

(1) Both the soldered and element sides of the circuit board are silk-printed so that circuit signals can be checked with the circuit board installed in the lower case.

1) Remove the 7 screws that fasten the upper and lower cases to the casing on the back.

2) Slowly raise the upper case at the rear end, and disconnect the FPC cable, which connects the cartridge option connector to the MOS circuit board's CN8, from the MOSU circuit board.

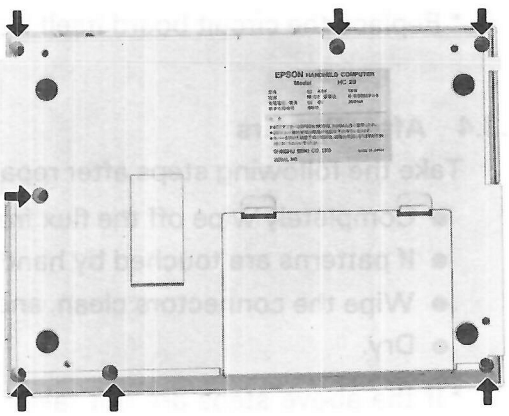

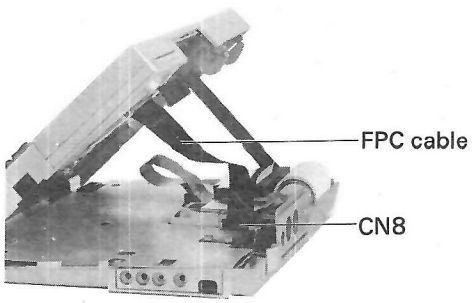

Fig. 7-8

(2) Checking circuit signals with the MOSU circuit board installed.

1) Raise the upper case and let it rest on a wall, for example, as shown at right so that the keyboard switches will not be depressed.

2) The circuit board has 4 check terminals for checking its voltages and circuit signals with an oscilloscope and other instruments.

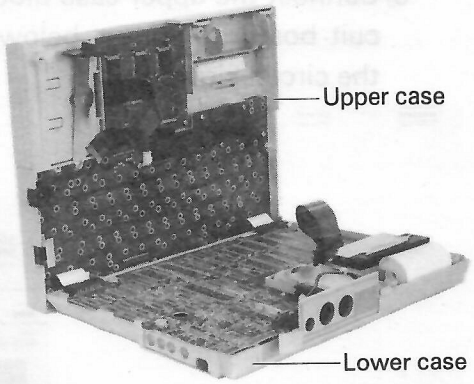

Fig. 7-9

(3) Checking circuit signals with the MOSU circuit board removed.

1) Disconnect the battery cable from the battery connector on the circuit board.

2) Remove the two screws that fasten the printer mount, and disconnect the FPC cable, which connects the printer to the circuit board, from the connector.

3) Disconnect the two FPC cables, which connect the keyboard (upper case) to the circuit board, from the connectors.

4) Slightly raise the left side (battery connector side) of the circuit board, slide it a little, exercising care not to contact the circuit board's CN7 hard with the case, and take the circuit board from the lower case.

5) Reconnect the cables which were disconnected in Steps 1), 2) and 3).

- Two keyboard FPC cables
- One printer FPC cable
- One battery cable

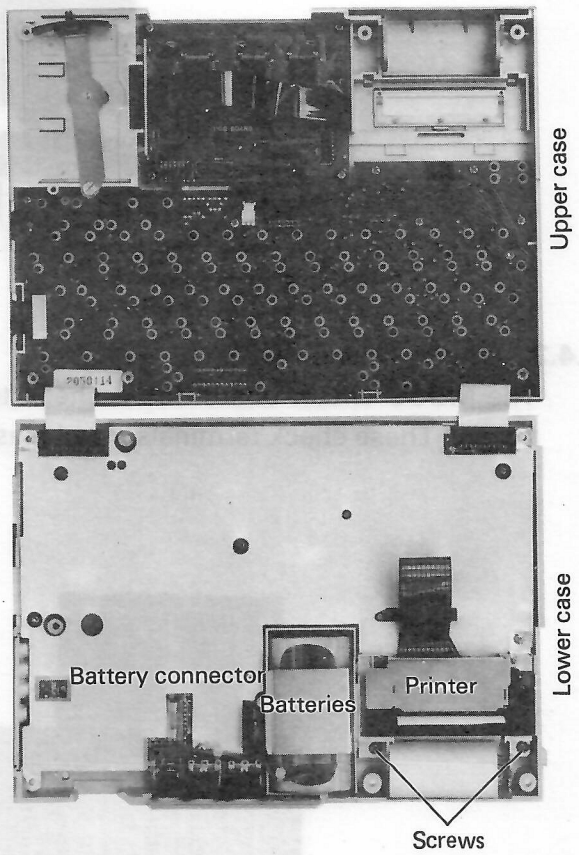

Fig. 7-10

6) Connect the upper case block to the circuit board as shown below, and check the circuit signals.

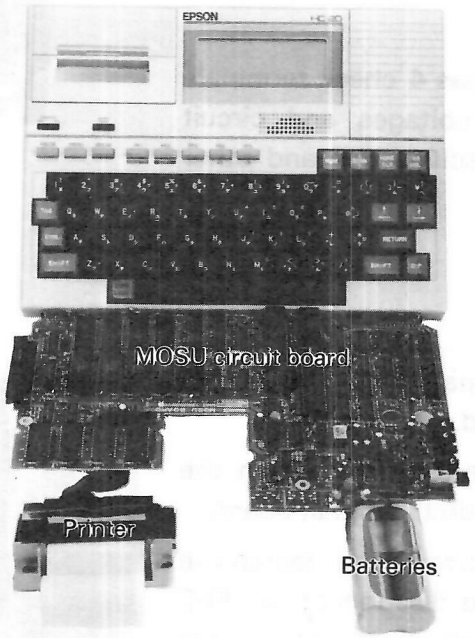

Fig. 7-11

7.4.2 Check Terminals

The MOSU circuit board has 4 check terminals on the back (soldered side) of it as shown below. These check terminals may be used for maintenance purposes.

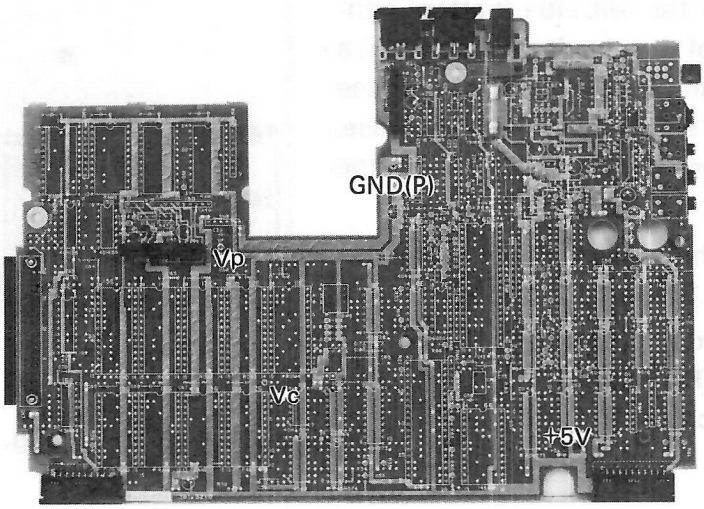

Fig. 7-12

Point	Purpose
Vp	Printer voltage (+5V)
Vc	RAM backup voltage (Approx. 3V when power is off)
GND (P)	Printer grounding
+5V	Circuit voltage (+5V)

CHAPTER 8
TROUBLESHOOTING

8.1 Entry for Troubleshooting 8- 1
8.2 Check-out Procedure 8- 2
8.3 Unit Troubleshooting 8-11
8.3.1 MOSU Circuit Board 8-11
8.3.2 Keyboard 8-46
8.3.3 LCD 8-50
8.3.4 Micro Printer (Model-160) 8-54
8.4 Troubleshooting Table 8-60
8.4.1 Power Source 8-60
8.4.2 Initialization 8-65
8.4.3 Keyboard 8-67
8.4.4 LCD 8-69
8.4.5 Micro Printer (Model-160) 8-71
8.4.6 RS-232C 8-76
8.4.7 Serial 8-79
8.4.8 ROM Cartridge 8-80
8.4.9 Microcassette 8-81
8.4.10 RAM 8.83
8.4.11 External Cassette 8-85

8.1 Entry for Troubleshooting

Troubleshooting is not an easy process since troubles can happen in various sections in varied froms. The following three items, however, will provide handy guidelines for you to overcome your troubles.

1. Check-out procedure
   Objective: Provide guidelines to overcome troubles which can not be specifically described.
   Level: Fix up the system through replacement of units. (A basic knowledge of the system is the only requirement.)

2. Unit repair flow chart.
   Objective: Fix up faulty units at parts level.
   Level: A full knowledge and an advanced technique for the system are required.

3. Troubleshooting table
   A handy tool to pinspot the cause of trouble from visible defects or malfunctions.

Step for troubleshooting

Step 1: Try to fix the system by using the check-out procedure as described above. Be sure to check the replaced units to find out if they are faulty after the replacement. (So that you can discern the troubles due to faulty units from those due to bad connection of connectors and other parts.)

2: Replace the elements within the replaced units which are responsible for the trouble consulting the unit flow charts and/or the troubleshooting table.

Note 1: If you come across confirmation items on the flow charts, be sure that you follow the required confirmation procedure. Unless you do as you are required, you can damage the new units which have been set in the system.

2: If you are lost on the way of troubleshooting, be sure to come back to the beginning of the procedure to do it all over again.

3: If you lost the exit, repeating a same routine on the flow chart, consult the troubleshooting table to perform the repair correctly.

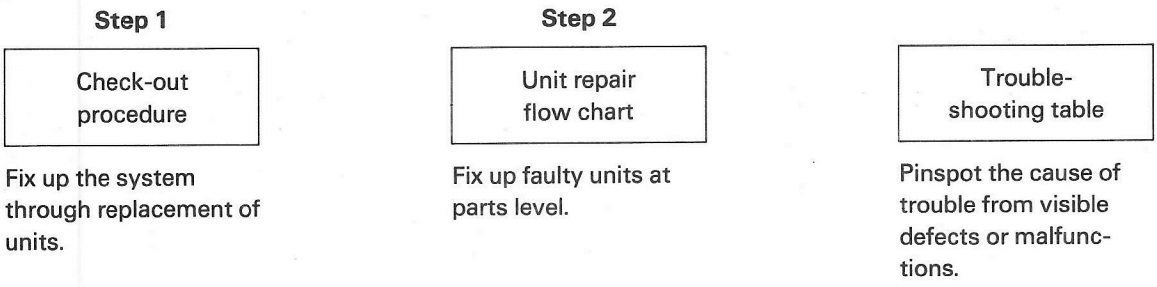

8.2 Check-out Procedure

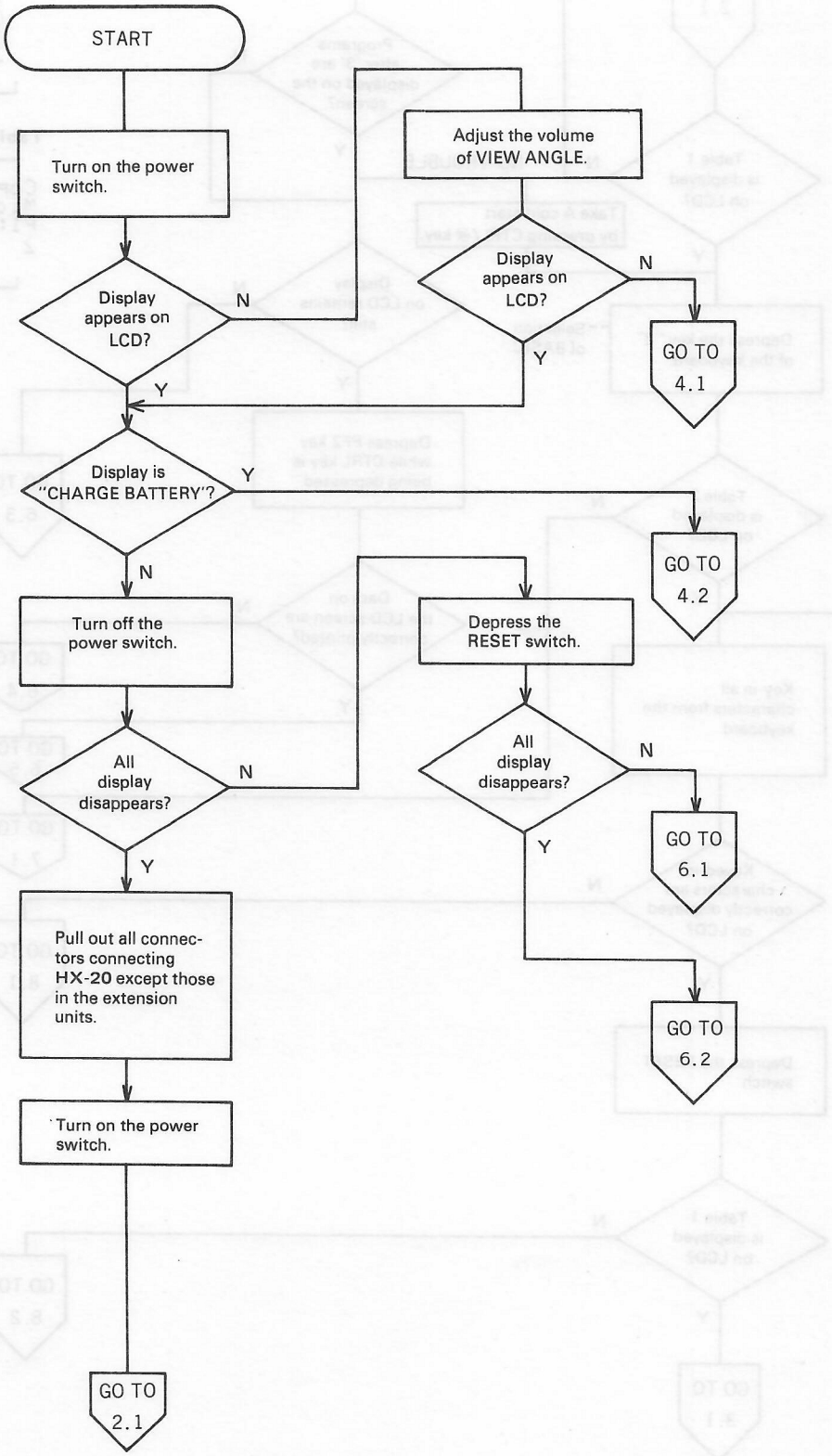

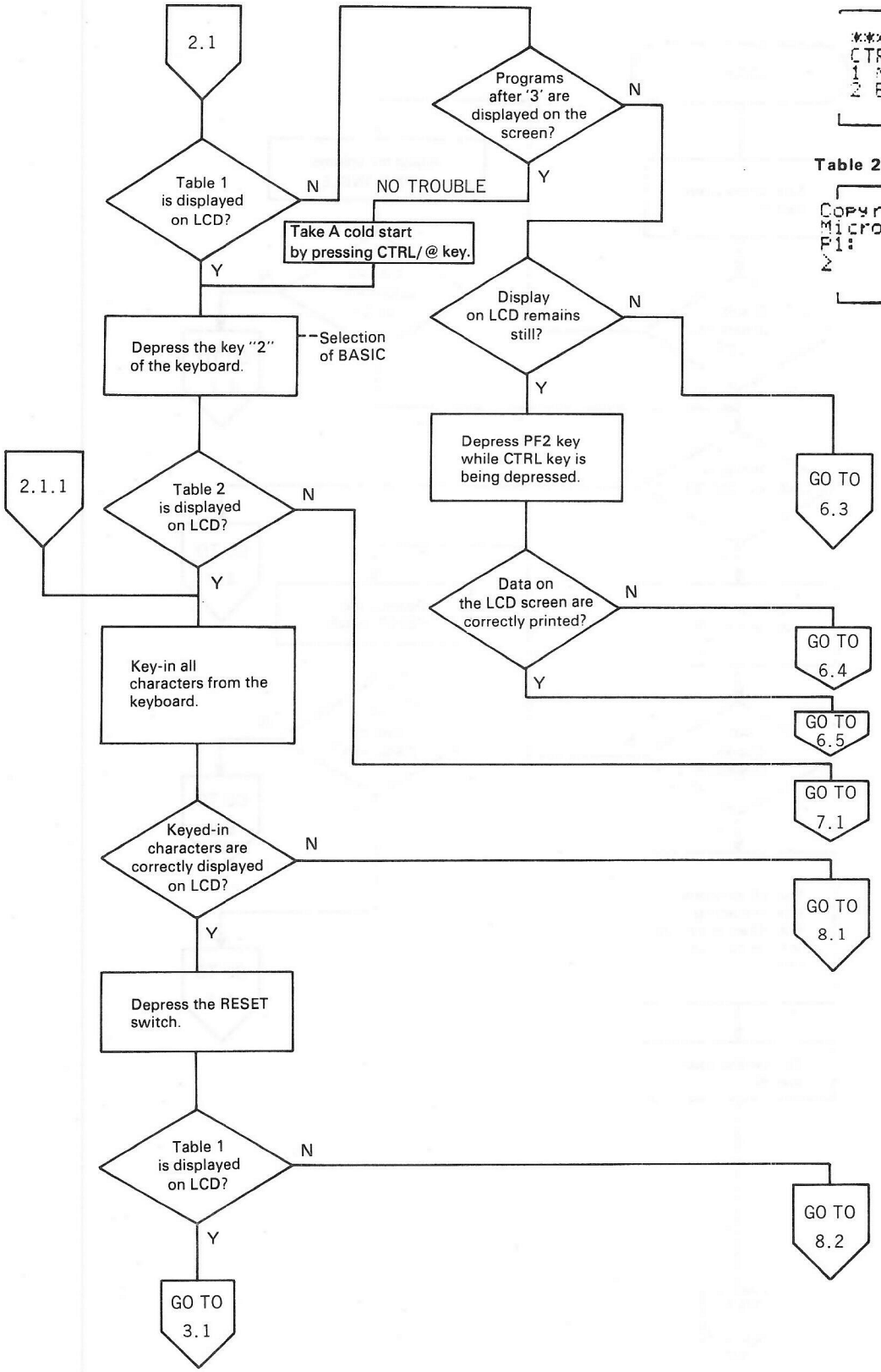

Table 1.

```
*** MENU ***
CTRL/@ Initialize
1 MONITOR
2 BASIC
```

Table 2.

```
Copyright 1982 by
Microsoft & EPSON
Pl:          0Byte
>
```

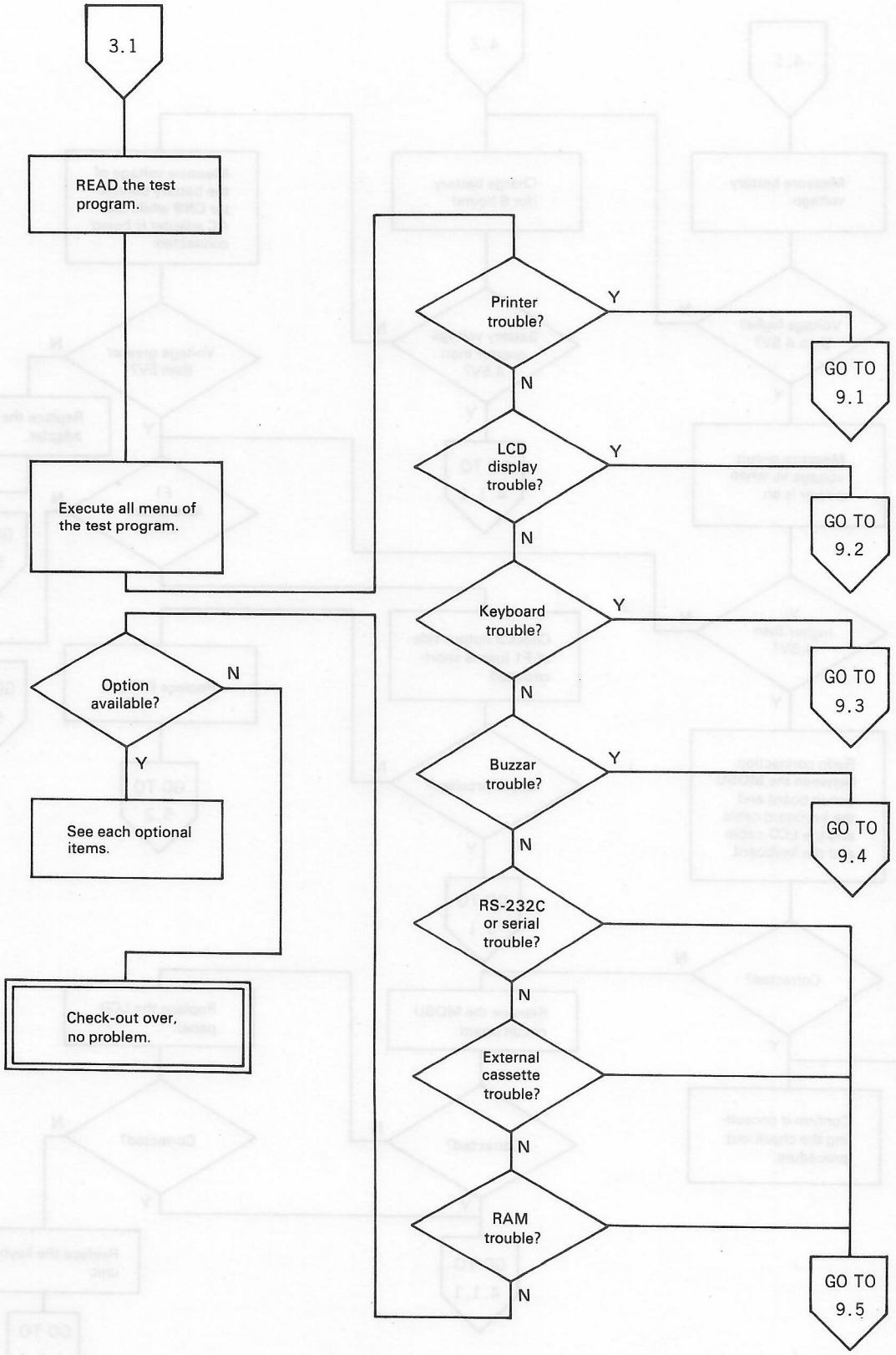
3.1
READ the test program.
Execute all menu of the test program.
Option available?
N
Y
See each optional items.
Check-out over, no problem.
Printer trouble?
Y
GO TO 9.1
N
LCD display trouble?
Y
GO TO 9.2
N
Keyboard trouble?
Y
GO TO 9.3
N
Buzzar trouble?
Y
GO TO 9.4
N
RS-232C or serial trouble?
N
External cassette trouble?
N
RAM trouble?
N
GO TO 9.5

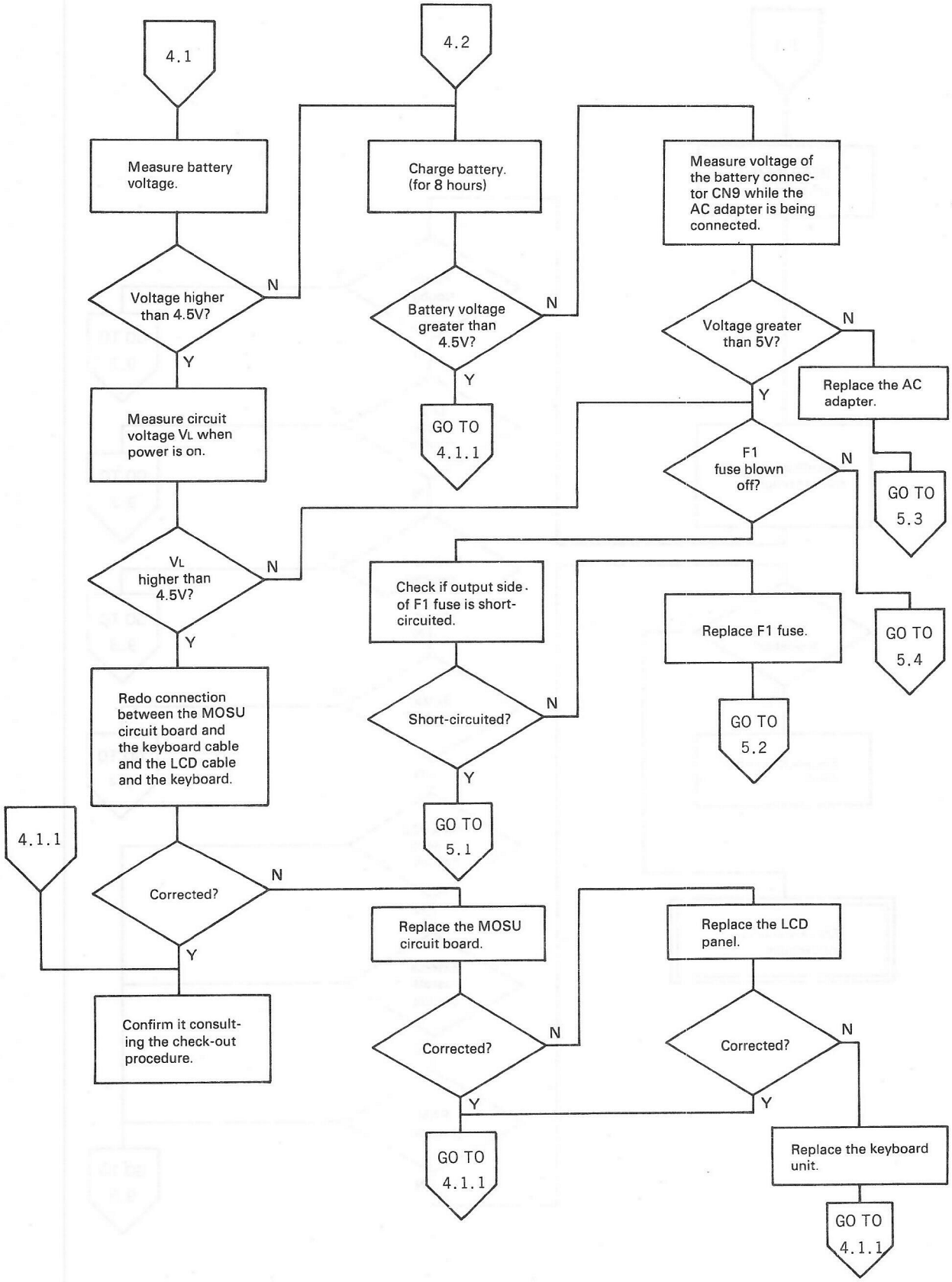
4.1
Measure battery voltage.
Voltage higher than 4.5V?
N
Y
Measure circuit voltage VL when power is on.
VL higher than 4.5V?
N
Y
Redo connection between the MOSU circuit board and the keyboard cable and the LCD cable and the keyboard.
4.1.1
Corrected?
N
Y
Confirm it consulting the check-out procedure.
4.2
Charge battery. (for 8 hours)
Battery voltage greater than 4.5V?
N
Y
GO TO 4.1.1
Check if output side of F1 fuse is short-circuited.
Short-circuited?
N
Y
GO TO 5.1
Replace the MOSU circuit board.
Corrected?
N
Y
GO TO 4.1.1
Measure voltage of the battery connector CN9 while the AC adapter is being connected.
Voltage greater than 5V?
N
Y
Replace the AC adapter.
GO TO 5.3
F1 fuse blown off?
N
Replace F1 fuse.
GO TO 5.2
GO TO 5.4
Replace the LCD panel.
Corrected?
N
Y
Replace the keyboard unit.
GO TO 4.1.1

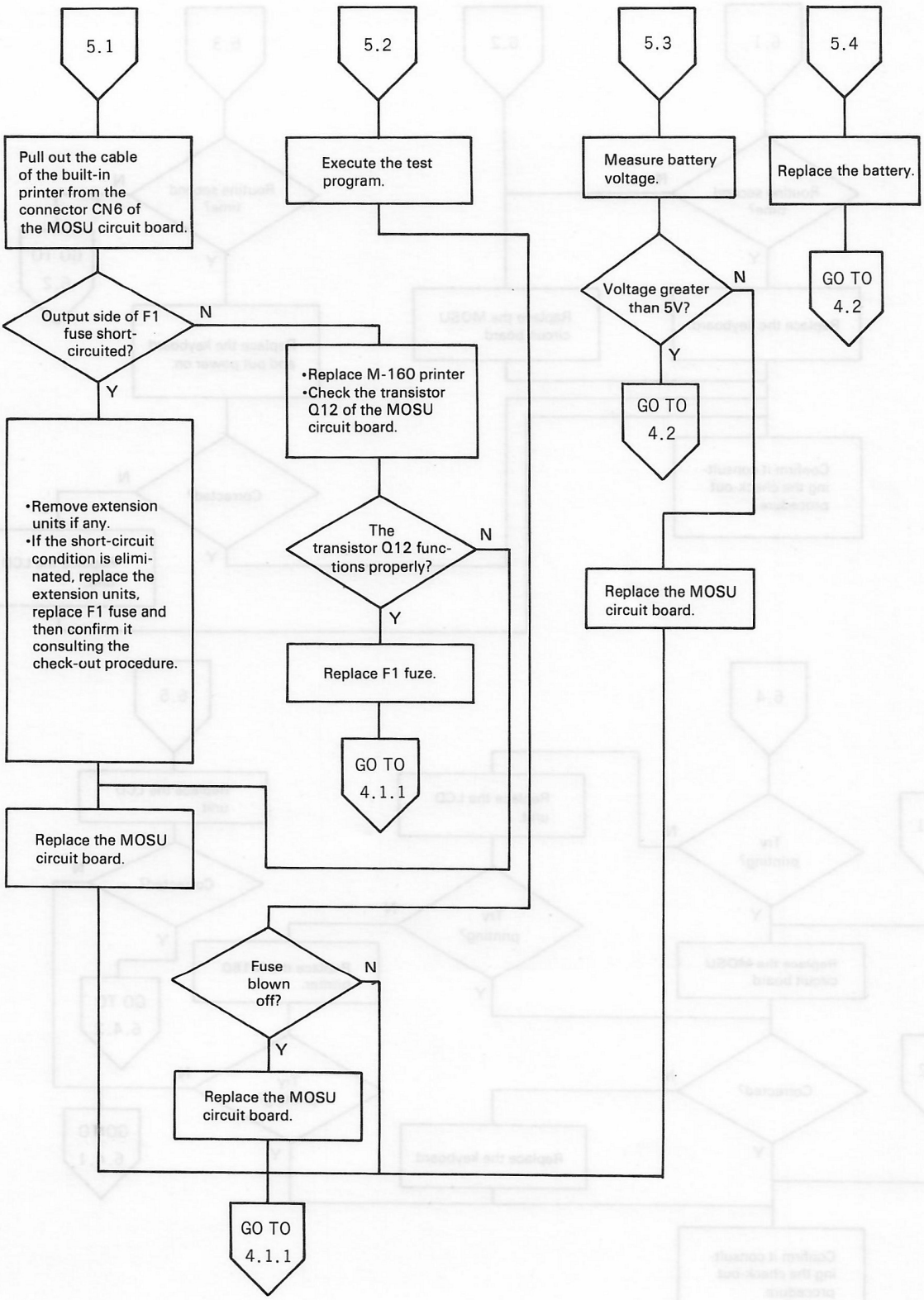
5.1
5.2
5.3
5.4
Pull out the cable of the built-in printer from the connector CN6 of the MOSU circuit board.
Execute the test program.
Measure battery voltage.
Replace the battery.
Output side of F1 fuse short-circuited?
N
Y
•Replace M-160 printer
•Check the transistor Q12 of the MOSU circuit board.
Voltage greater than 5V?
N
Y
GO TO 4.2
GO TO 4.2
•Remove extension units if any.
•If the short-circuit condition is eliminated, replace the extension units, replace F1 fuse and then confirm it consulting the check-out procedure.
The transistor Q12 functions properly?
N
Y
Replace F1 fuze.
GO TO 4.1.1
Replace the MOSU circuit board.
Replace the MOSU circuit board.
Fuse blown off?
N
Y
Replace the MOSU circuit board.
GO TO 4.1.1

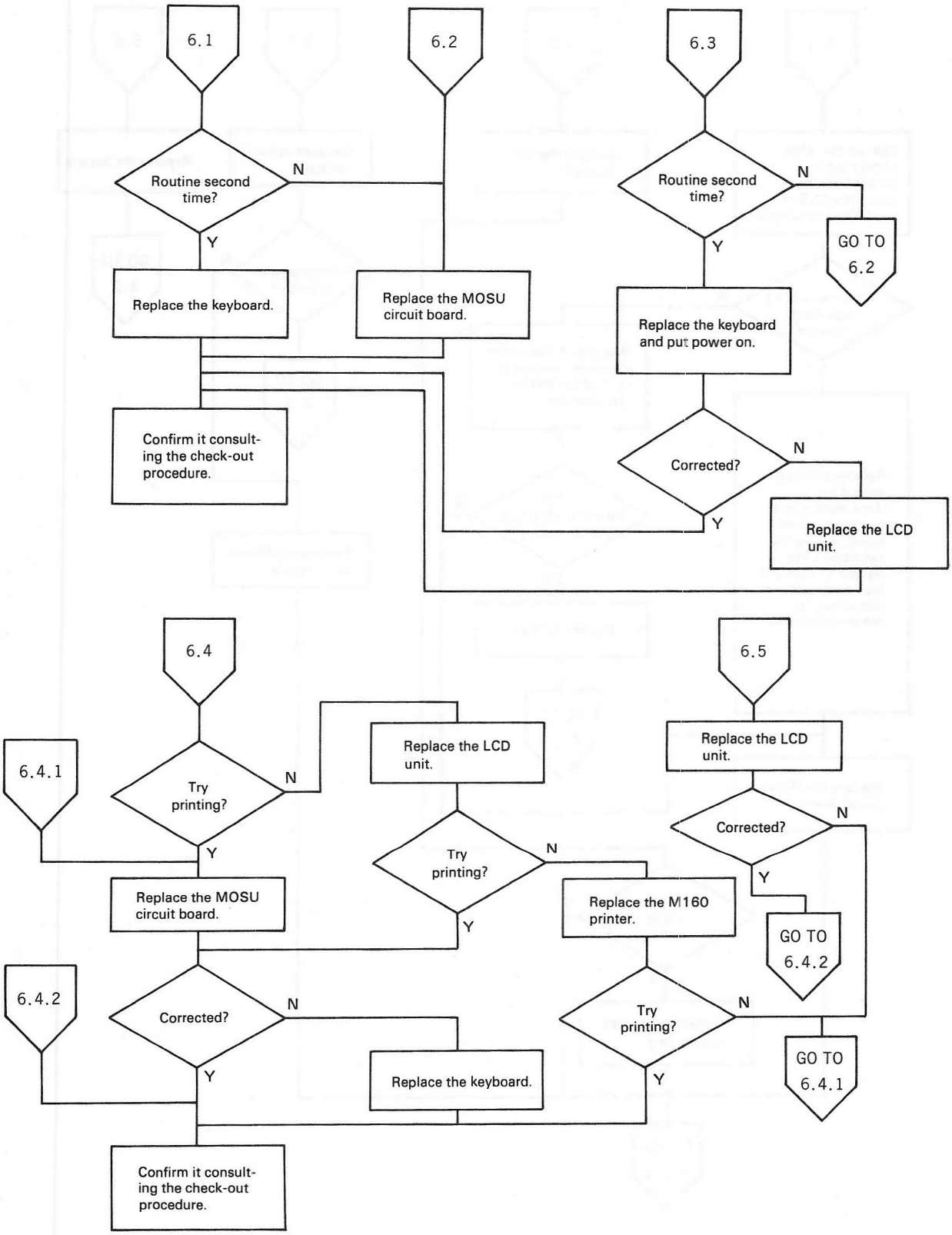
6.1
6.2
6.3
Routine second time?
N
Y
Routine second time?
N
Y
GO TO 6.2
Replace the keyboard.
Replace the MOSU circuit board.
Replace the keyboard and put power on.
Confirm it consulting the check-out procedure.
Corrected?
N
Y
Replace the LCD unit.
6.4
6.5
6.4.1
Try printing?
N
Y
Replace the LCD unit.
Try printing?
N
Y
Replace the LCD unit.
Corrected?
N
Y
Replace the MOSU circuit board.
Replace the M160 printer.
GO TO 6.4.2
6.4.2
Corrected?
N
Y
Try printing?
N
Y
GO TO 6.4.1
Replace the keyboard.
Confirm it consulting the check-out procedure.

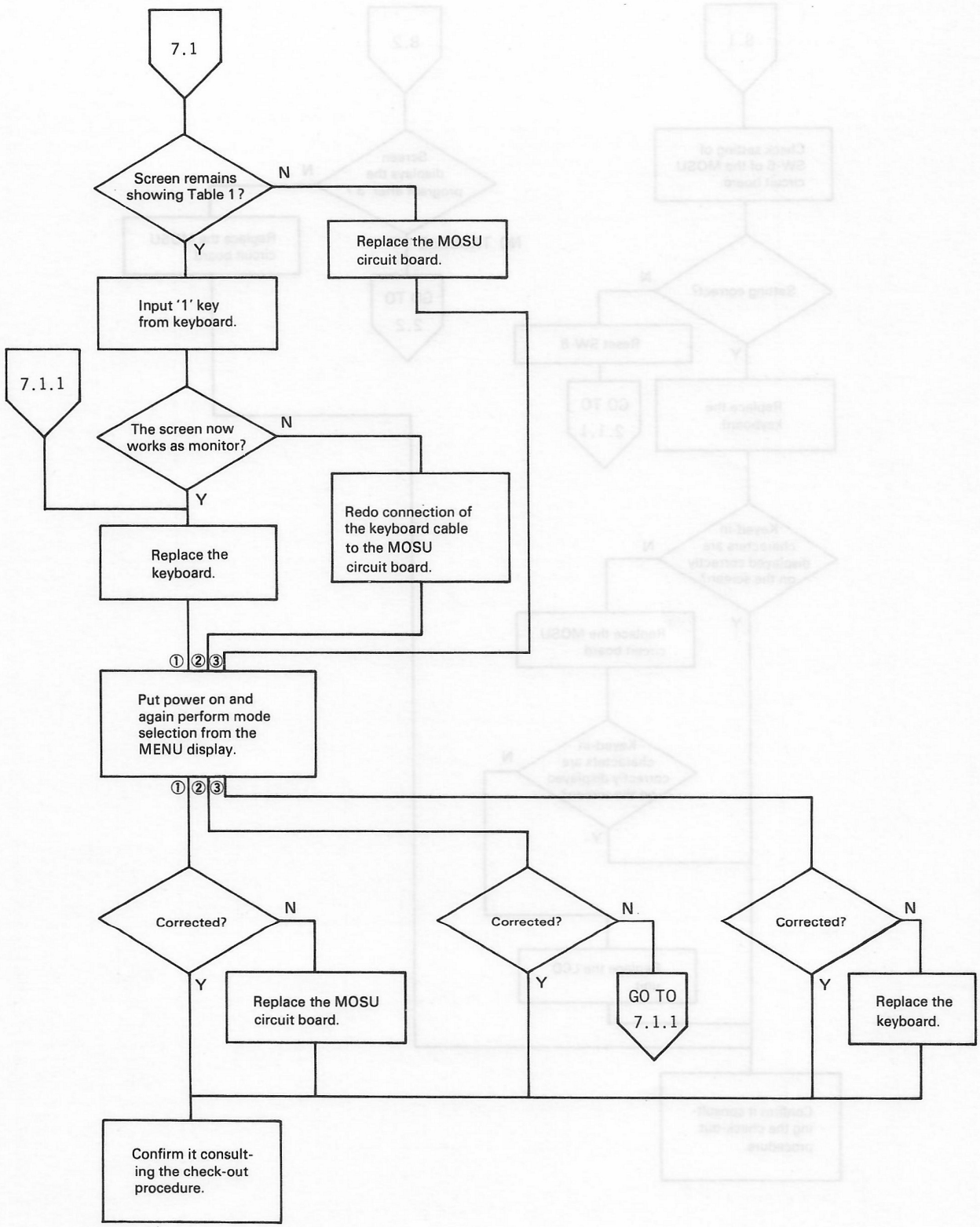
7.1
Screen remains showing Table 1?
N
Y
Replace the MOSU circuit board.
Input '1' key from keyboard.
7.1.1
The screen now works as monitor?
N
Y
Redo connection of the keyboard cable to the MOSU circuit board.
Replace the keyboard.
① ② ③
Put power on and again perform mode selection from the MENU display.
① ② ③
Corrected?
N
Y
Replace the MOSU circuit board.
Corrected?
N
Y
GO TO 7.1.1
Corrected?
N
Y
Replace the keyboard.
Confirm it consulting the check-out procedure.

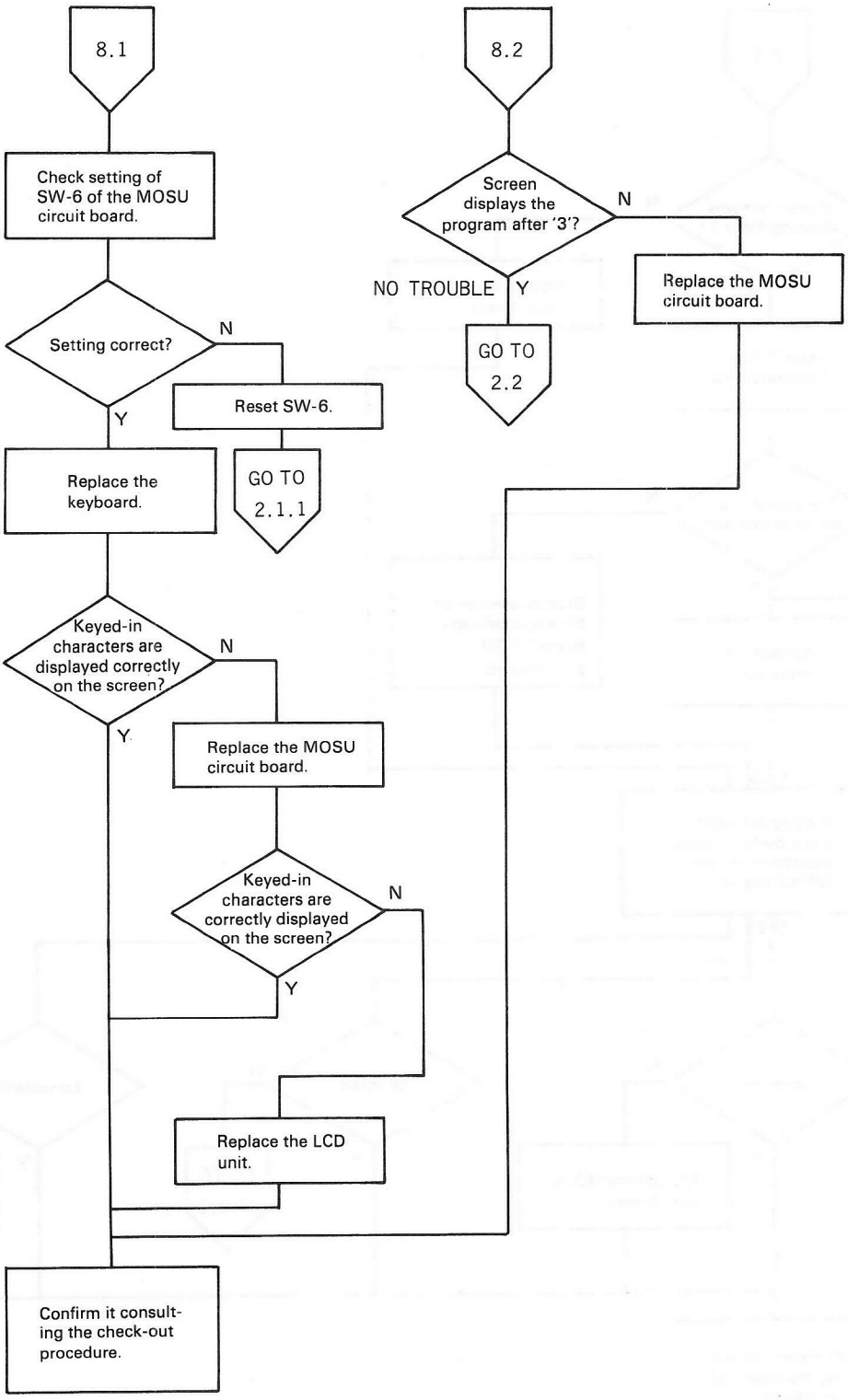
8.1
Check setting of SW-6 of the MOSU circuit board.
Setting correct?
N
Reset SW-6.
GO TO 2.1.1
Y
Replace the keyboard.
Keyed-in characters are displayed correctly on the screen?
N
Y
Replace the MOSU circuit board.
Keyed-in characters are correctly displayed on the screen?
N
Y
Replace the LCD unit.
Confirm it consulting the check-out procedure.
8.2
Screen displays the program after '3'?
N
NO TROUBLE
Y
GO TO 2.2
Replace the MOSU circuit board.

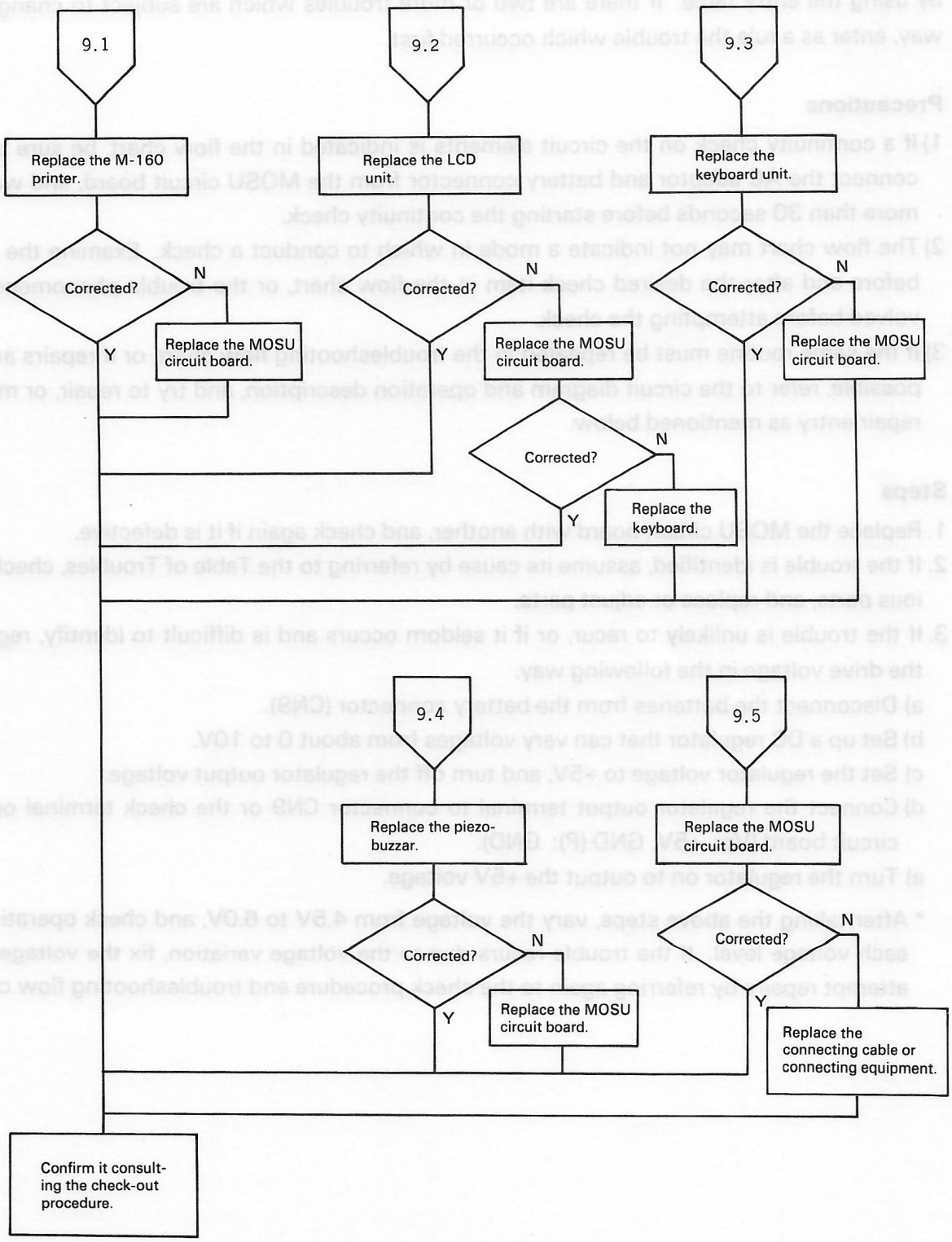
9.1
Replace the M-160 printer.
Corrected?
N
Y
Replace the MOSU circuit board.
9.2
Replace the LCD unit.
Corrected?
N
Y
Replace the MOSU circuit board.
9.3
Replace the keyboard unit.
Corrected?
N
Y
Replace the MOSU circuit board.
Corrected?
N
Y
Replace the keyboard.
9.4
Replace the piezo-buzzar.
Corrected?
N
Y
Replace the MOSU circuit board.
9.5
Replace the MOSU circuit board.
Corrected?
N
Y
Replace the connecting cable or connecting equipment.
Confirm it consulting the check-out procedure.

8.3 Unit Troubleshooting

8.3.1 MOSU Circuit Board

In troubleshooting the MOSU circuit board, search the entry routine for each type of trouble by using the entry table. If there are two or more troubles which are subject to change half way, enter as a rule the trouble which occurred first.

Precautions

1) If a continuity check on the circuit elements is indicated in the flow chart, be sure to disconnect the AC adaptor and battery connector from the MOSU circuit board, and wait for more than 30 seconds before starting the continuity check.
2) The flow chart may not indicate a mode in which to conduct a check. Examine the steps before and after the desired check item in the flow chart, or the trouble phenomenon involved before attempting the check.
3) If the same routine must be repeated in the troubleshooting flow chart, or if repairs are impossible, refer to the circuit diagram and operation description, and try to repair, or make a repair entry as mentioned below.

Steps

1. Replace the MOSU circuit board with another, and check again if it is defective.
2. If the trouble is identified, assume its cause by referring to the Table of Troubles, check various parts, and replace or adjust parts.
3. If the trouble is unlikely to recur, or if it seldom occurs and is difficult to identify, regulate the drive voltage in the following way.
   a) Disconnect the batteries from the battery connector (CN9).
   b) Set up a DC regulator that can vary voltages from about 0 to 10V.
   c) Set the regulator voltage to +5V, and turn off the regulator output voltage.
   d) Connect the regulator output terminal to connector CN9 or the check terminal on the circuit board (Vp: +5V, GND (P): GND).
   e) Turn the regulator on to output the +5V voltage.

   * After taking the above steps, vary the voltage from 4.5V to 6.0V, and check operation at each voltage level. If the trouble recurs due to the voltage variation, fix the voltage, and attempt repairs by referring again to the check procedure and troubleshooting flow chart.

ENTRY TABLE

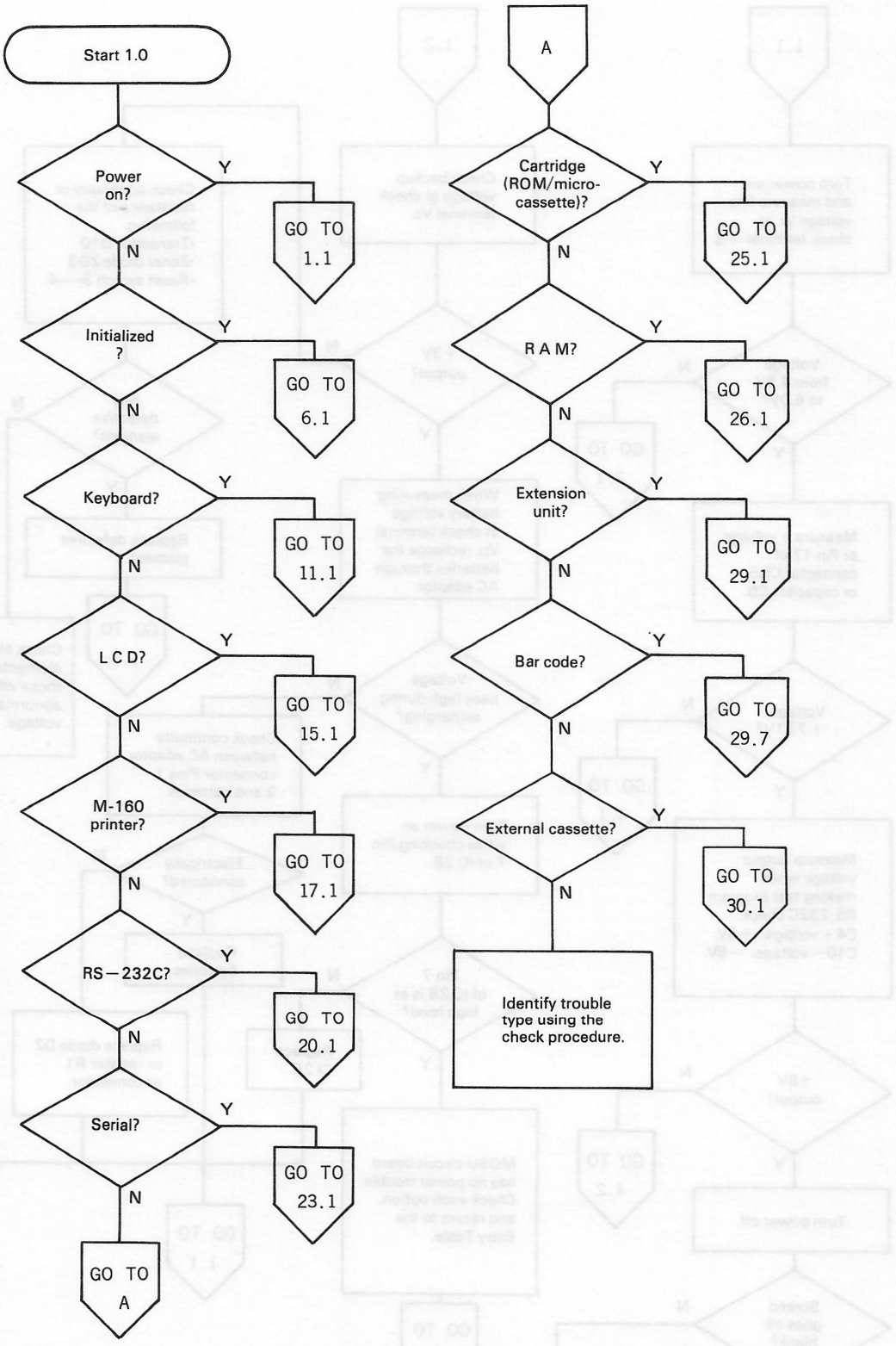
Start 1.0
Power on?
Y
GO TO 1.1
N
Initialized ?
Y
GO TO 6.1
N
Keyboard?
Y
GO TO 11.1
N
L C D?
Y
GO TO 15.1
N
M-160 printer?
Y
GO TO 17.1
N
RS—232C?
Y
GO TO 20.1
N
Serial?
Y
GO TO 23.1
N
GO TO A
A
Cartridge (ROM/micro-cassette)?
Y
GO TO 25.1
N
R A M?
Y
GO TO 26.1
N
Extension unit?
Y
GO TO 29.1
N
Bar code?
Y
GO TO 29.7
N
External cassette?
Y
GO TO 30.1
N
Identify trouble type using the check procedure.

POWER TROUBLE

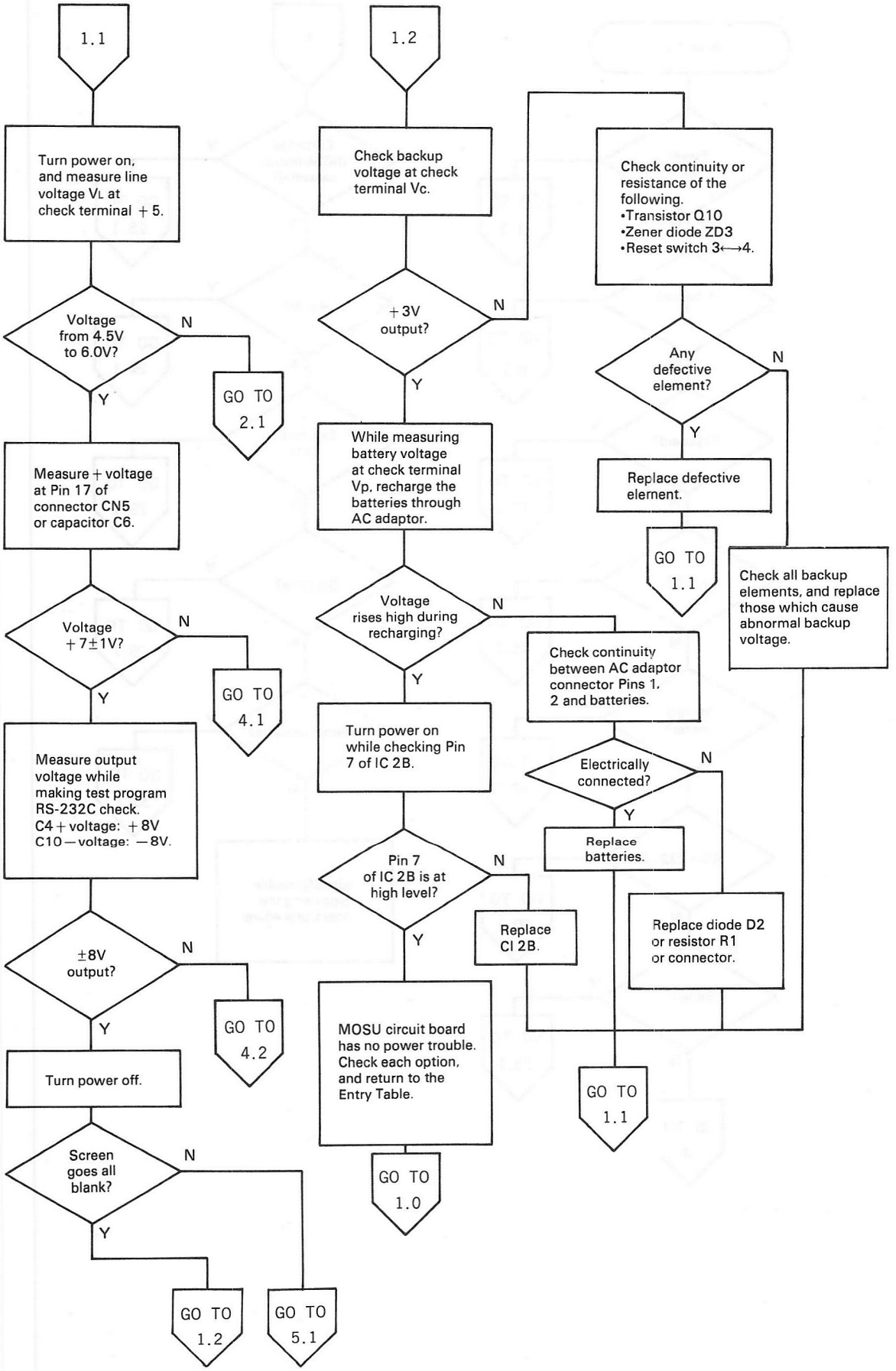

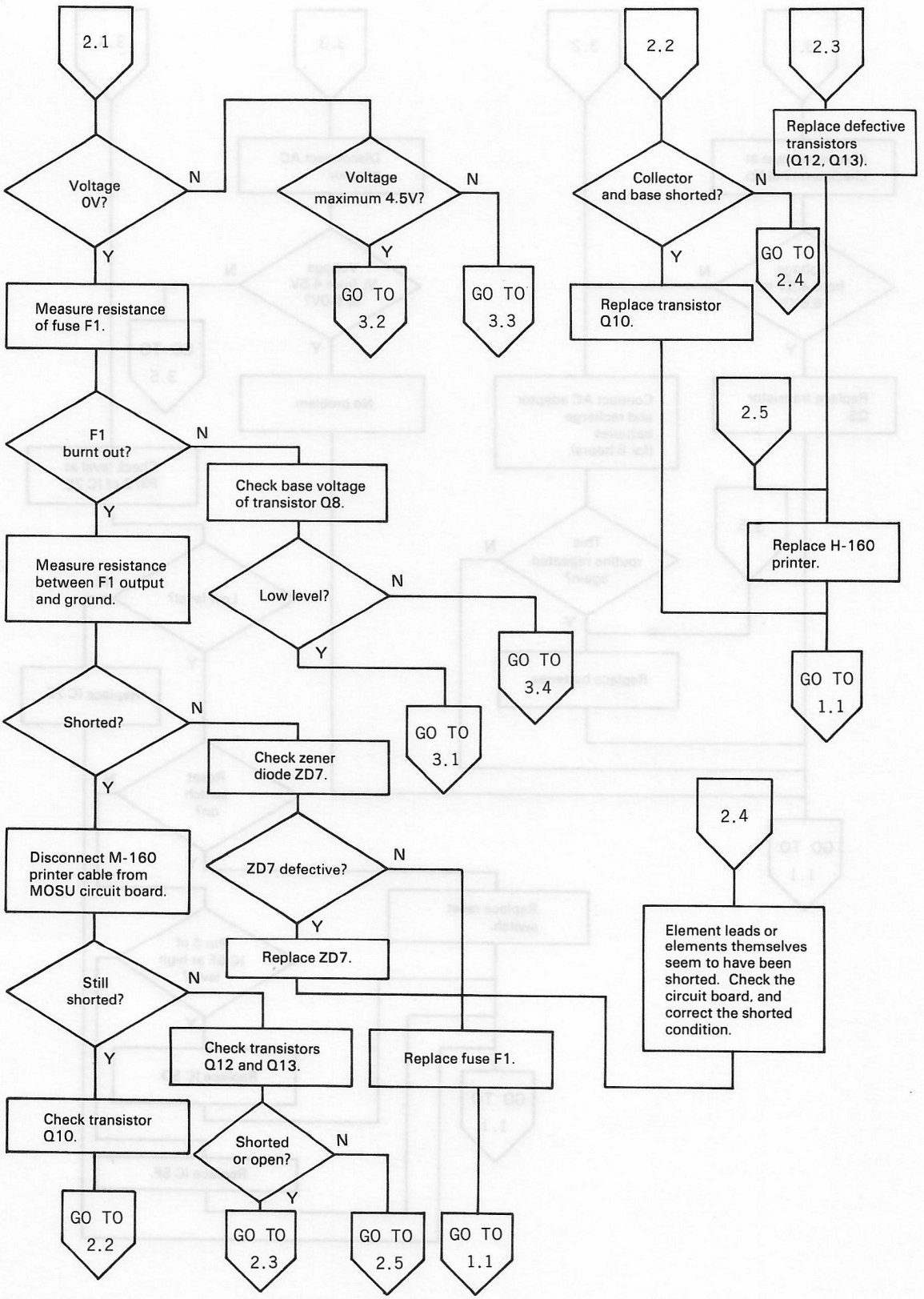
2.1
Voltage 0V?
N
Y
Voltage maximum 4.5V?
N
Y
GO TO 3.2
GO TO 3.3
Measure resistance of fuse F1.
F1 burnt out?
N
Y
Check base voltage of transistor Q8.
Measure resistance between F1 output and ground.
Low level?
N
Y
GO TO 3.4
Shorted?
N
Y
GO TO 3.1
Check zener diode ZD7.
Disconnect M-160 printer cable from MOSU circuit board.
ZD7 defective?
N
Y
Replace ZD7.
Still shorted?
N
Y
Check transistors Q12 and Q13.
Replace fuse F1.
Check transistor Q10.
Shorted or open?
N
Y
GO TO 2.2
GO TO 2.3
GO TO 2.5
GO TO 1.1
2.2
Collector and base shorted?
N
Y
GO TO 2.4
Replace transistor Q10.
2.3
Replace defective transistors (Q12, Q13).
2.5
Replace H-160 printer.
GO TO 1.1
2.4
Element leads or elements themselves seem to have been shorted. Check the circuit board, and correct the shorted condition.

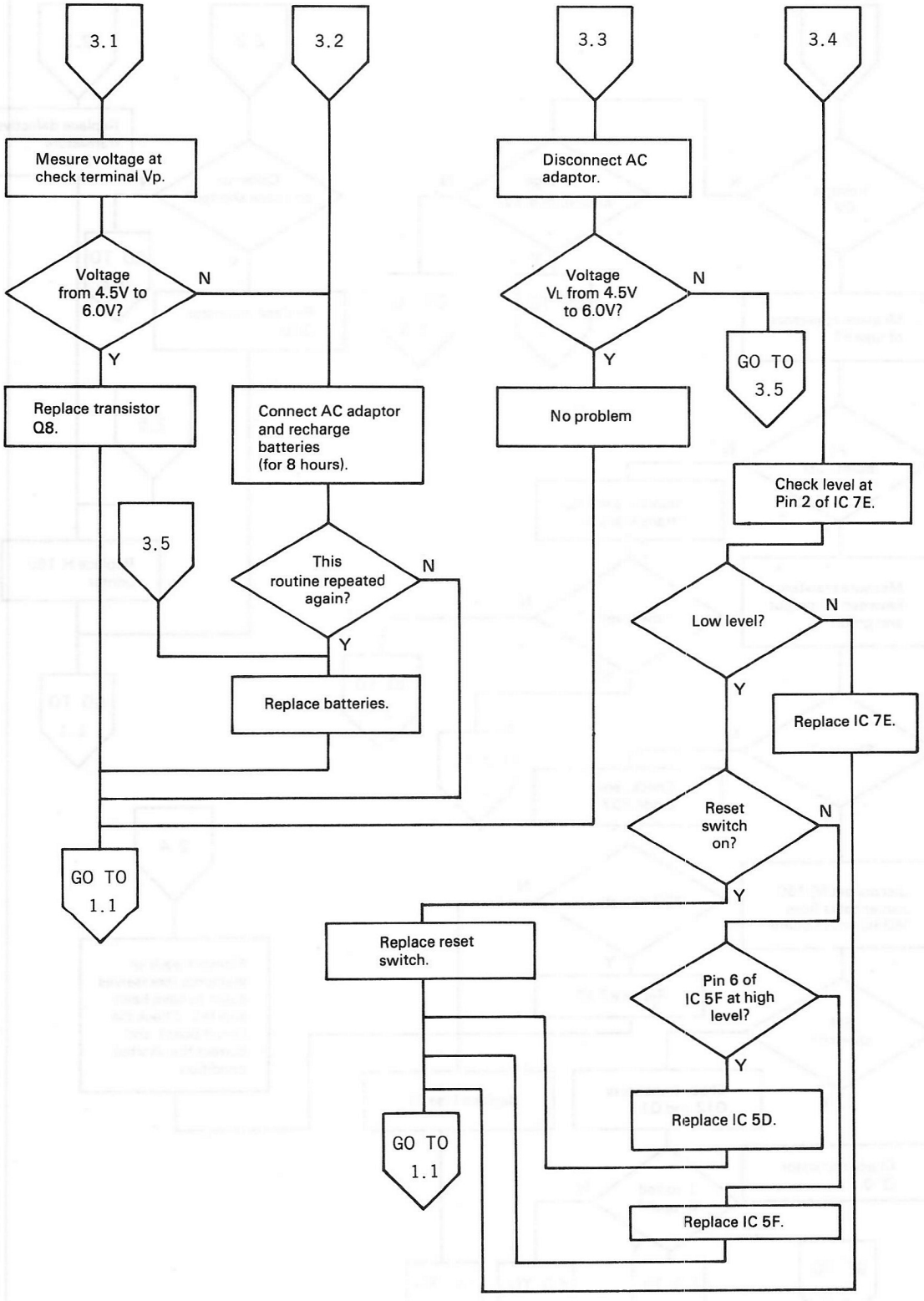
3.1
3.2
3.3
3.4
Mesure voltage at check terminal Vp.
Disconnect AC adaptor.
Voltage from 4.5V to 6.0V?
N
Y
Voltage VL from 4.5V to 6.0V?
N
Y
GO TO 3.5
Replace transistor Q8.
Connect AC adaptor and recharge batteries (for 8 hours).
No problem
Check level at Pin 2 of IC 7E.
3.5
This routine repeated again?
N
Y
Low level?
N
Y
Replace batteries.
Replace IC 7E.
Reset switch on?
N
Y
GO TO 1.1
Replace reset switch.
Pin 6 of IC 5F at high level?
Y
GO TO 1.1
Replace IC 5D.
Replace IC 5F.

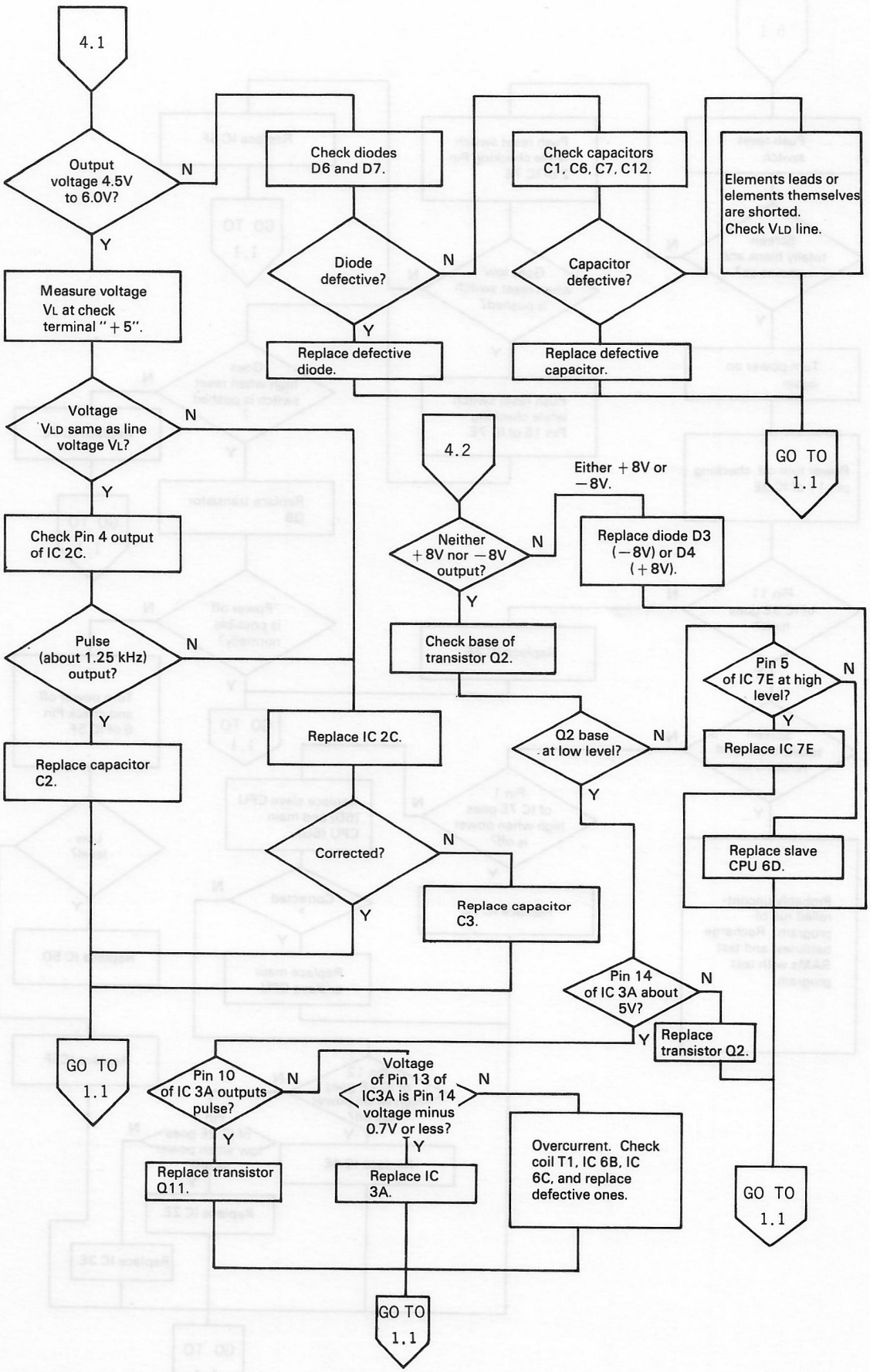
4.1
Output voltage 4.5V to 6.0V?
N
Y
Check diodes D6 and D7.
Check capacitors C1, C6, C7, C12.
Elements leads or elements themselves are shorted. Check VLD line.
Diode defective?
N
Y
Capacitor defective?
Measure voltage VL at check terminal "+5".
Replace defective diode.
Replace defective capacitor.
Voltage VLD same as line voltage VL?
N
Y
GO TO 1.1
4.2
Either +8V or −8V.
Check Pin 4 output of IC 2C.
Neither +8V nor −8V output?
N
Y
Replace diode D3 (−8V) or D4 (+8V).
Pulse (about 1.25 kHz) output?
N
Y
Check base of transistor Q2.
Pin 5 of IC 7E at high level?
N
Y
Replace IC 2C.
Q2 base at low level?
N
Y
Replace IC 7E
Replace capacitor C2.
Corrected?
N
Y
Replace slave CPU 6D.
Replace capacitor C3.
Pin 14 of IC 3A about 5V?
N
Y
Replace transistor Q2.
GO TO 1.1
Pin 10 of IC 3A outputs pulse?
N
Y
Voltage of Pin 13 of IC3A is Pin 14 voltage minus 0.7V or less?
N
Y
Overcurrent. Check coil T1, IC 6B, IC 6C, and replace defective ones.
Replace transistor Q11.
Replace IC 3A.
GO TO 1.1
GO TO 1.1

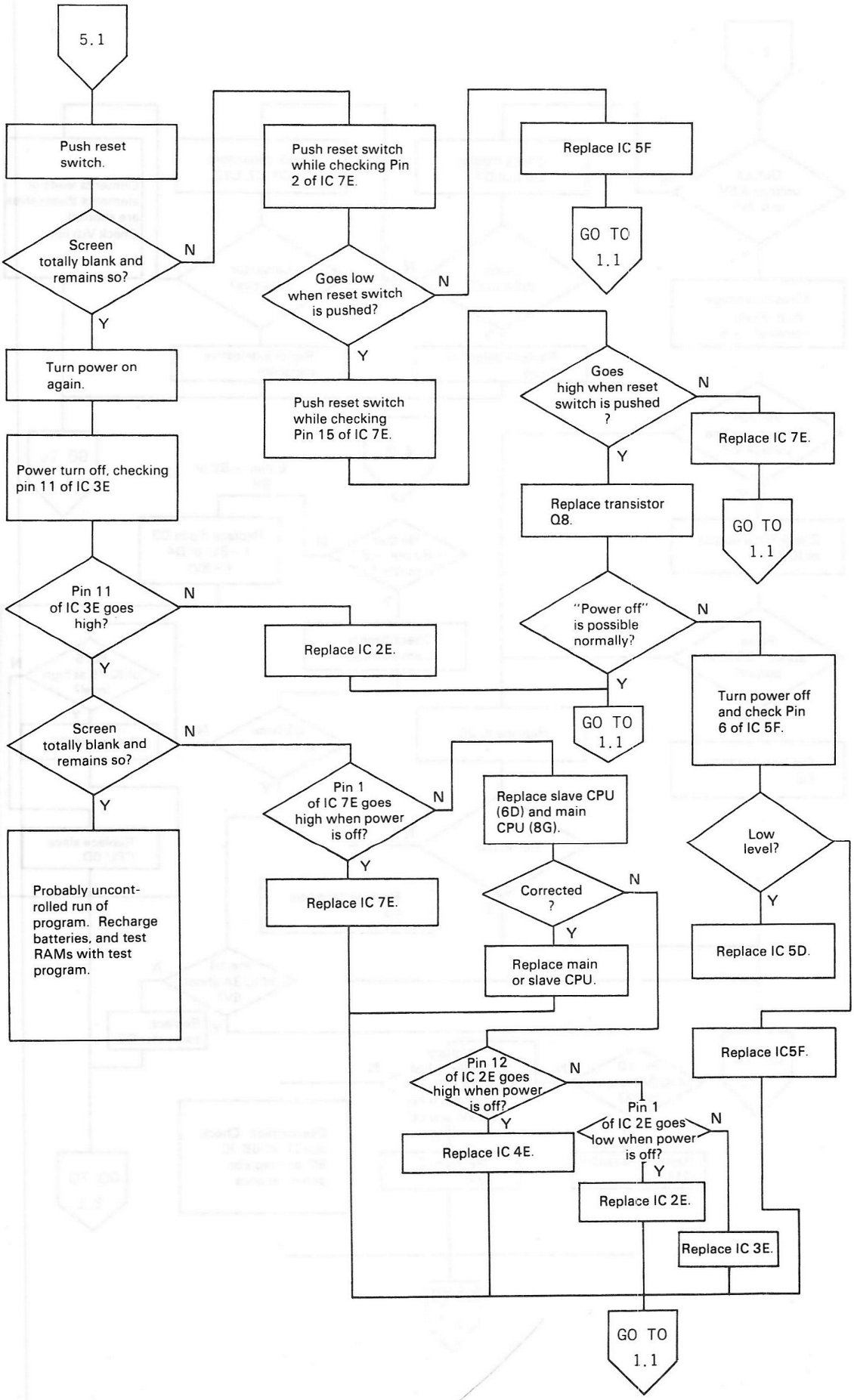
5.1
Push reset switch.
Screen totally blank and remains so?
N
Y
Turn power on again.
Power turn off, checking pin 11 of IC 3E
Pin 11 of IC 3E goes high?
N
Y
Replace IC 2E.
Screen totally blank and remains so?
N
Y
Probably uncontrolled run of program. Recharge batteries, and test RAMs with test program.
Push reset switch while checking Pin 2 of IC 7E.
Goes low when reset switch is pushed?
N
Y
Push reset switch while checking Pin 15 of IC 7E.
Pin 1 of IC 7E goes high when power is off?
N
Y
Replace IC 7E.
Replace IC 5F
GO TO 1.1
Goes high when reset switch is pushed ?
N
Y
Replace IC 7E.
GO TO 1.1
Replace transistor Q8.
"Power off" is possible normally?
N
Y
Turn power off and check Pin 6 of IC 5F.
GO TO 1.1
Replace slave CPU (6D) and main CPU (8G).
Corrected ?
N
Y
Replace main or slave CPU.
Low level?
Y
Replace IC 5D.
Replace IC5F.
Pin 12 of IC 2E goes high when power is off?
N
Y
Replace IC 4E.
Pin 1 of IC 2E goes low when power is off?
N
Y
Replace IC 2E.
Replace IC 3E.
GO TO 1.1

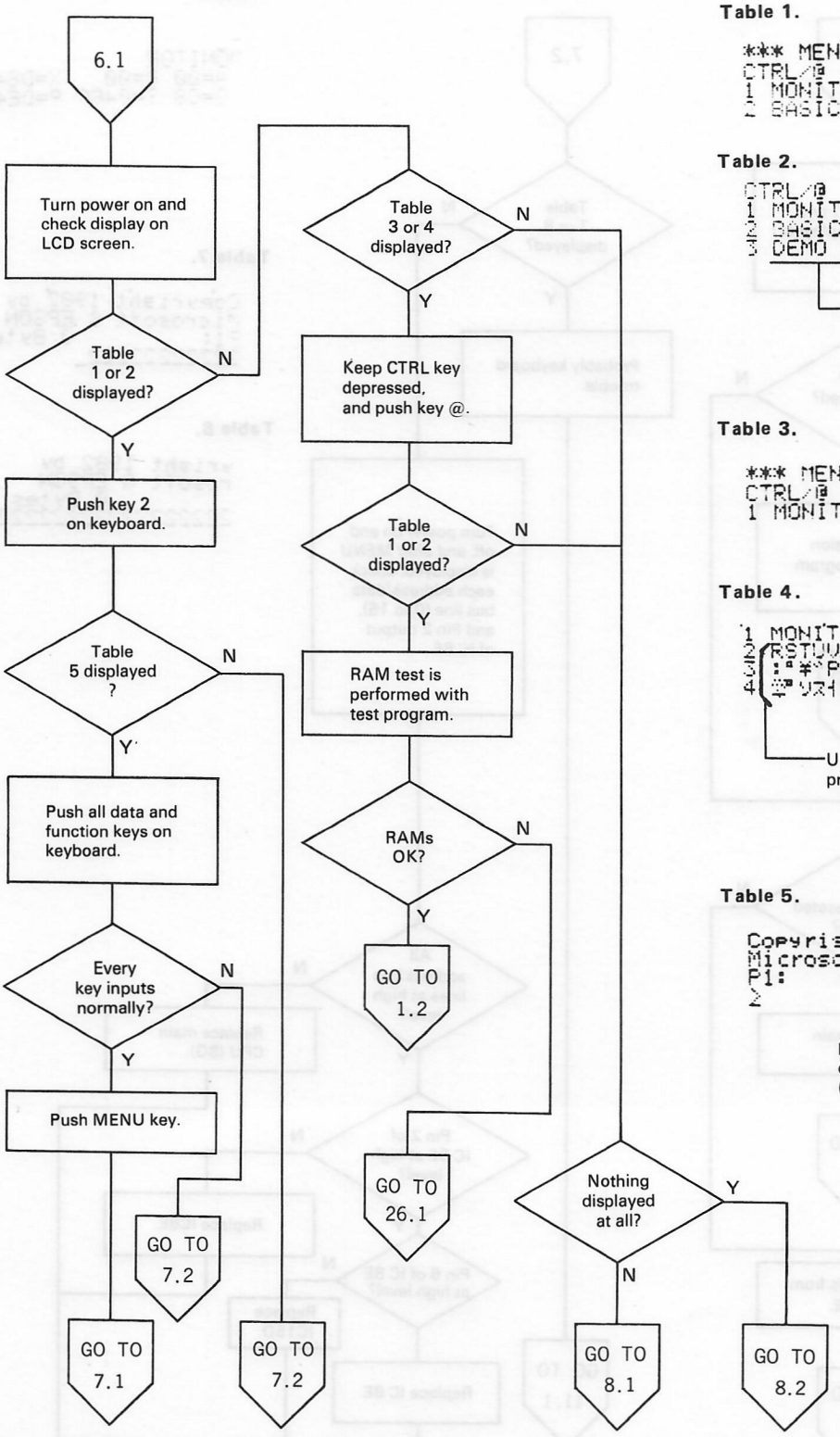

Table 1.

```
*** MENU ***
CTRL/@ Initialize
1 MONITOR
2 BASIC
```

Table 2.

```
CTRL/@ Initialize
1 MONITOR
2 BASIC
3 DEMO PGM BAS
```

Arbitrary program name

Table 3.

```
*** MENU ***
CTRL/@ Initialize
1 MONITOR
```

Table 4.

```
1 MONITOR
2 RSTUVWXY BAS
3 :ª¥ºP-+: BAS
4 ♥ﾘｽｲ▌'- BAS
```

Unintelligible program name

Table 5.

```
Copyright 1982 by
Microsoft & EPSON
P1:          0 Bytes
2
```

Number of bytes of program P1 (0～XXXX Bytes)

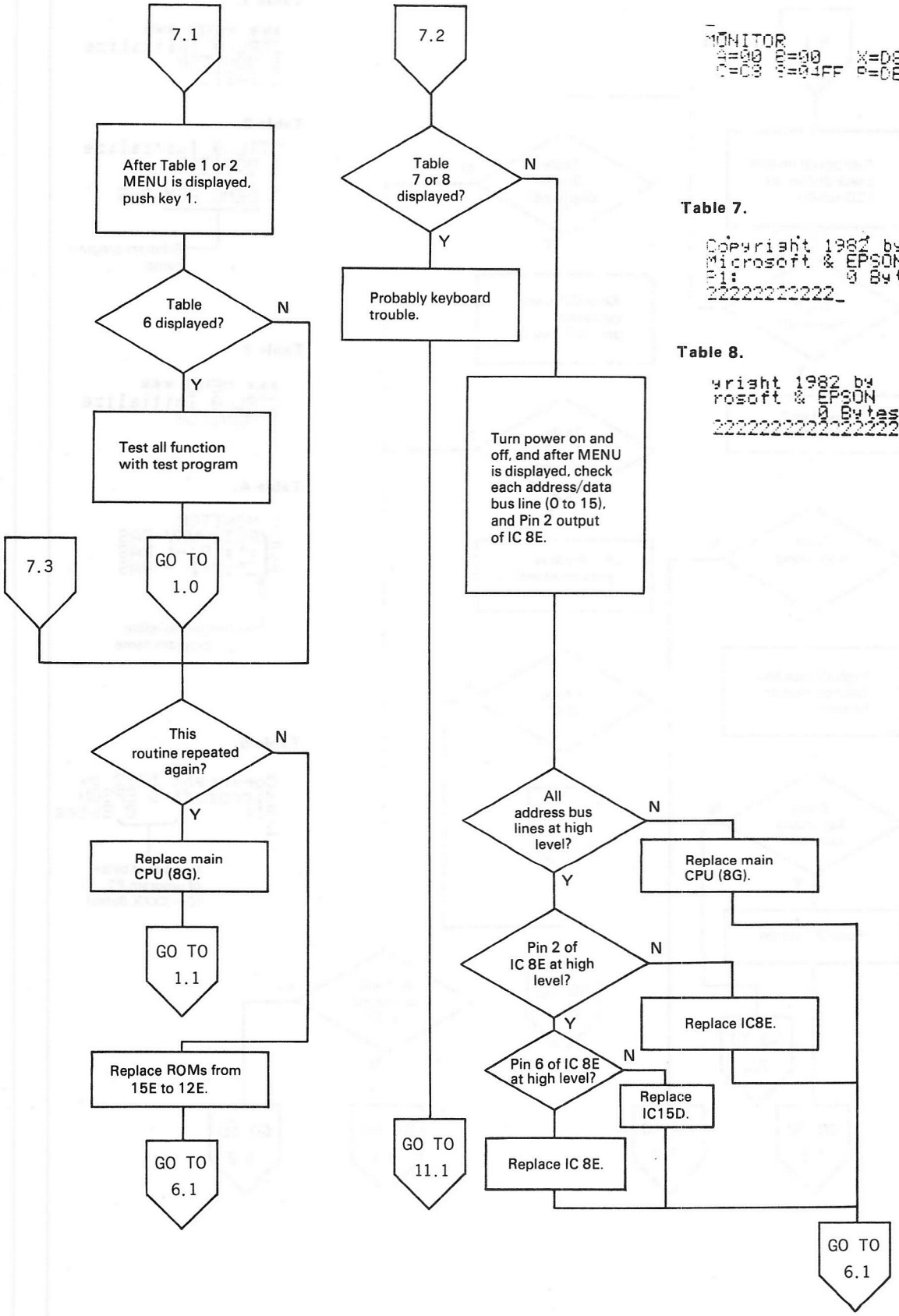

Table 6.

```
MONITOR
A=00 B=00   X=0840
C=C3 D=01FF P=0E43
```

Table 7.

```
Copyright 1982 by
Microsoft & EPSON
B1:      0 Bytes
22222222222_
```

Table 8.

```
yright 1982 by
rosoft & EPSON
        0 Bytes
2222222222222222_
```

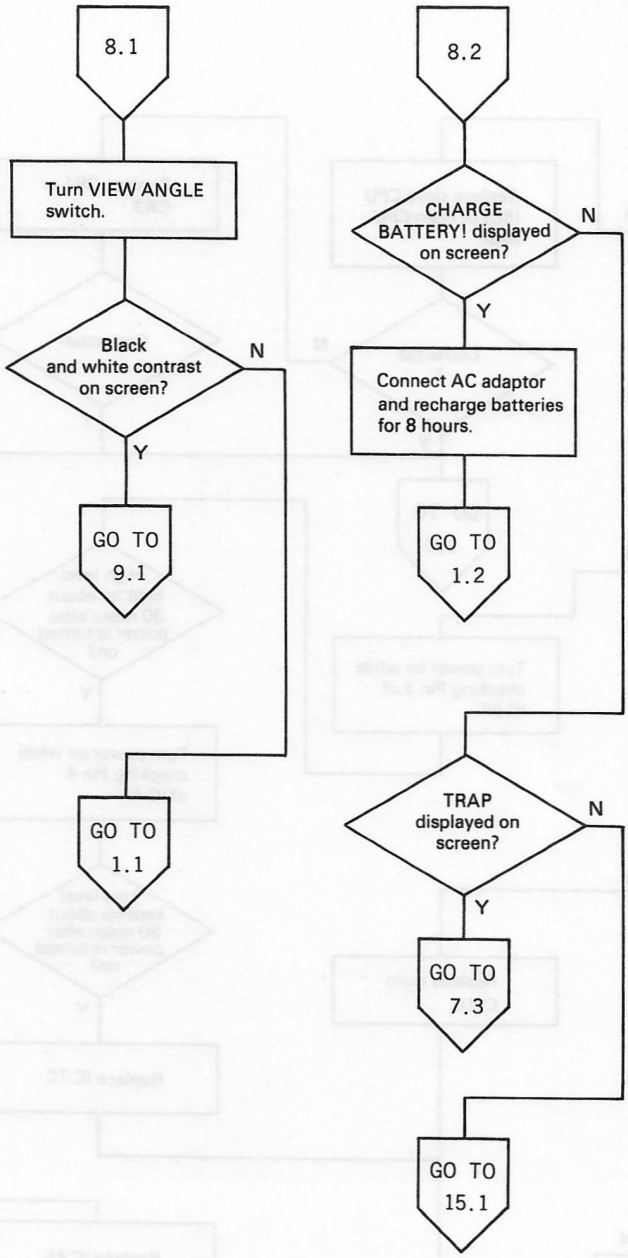
8.1
Turn VIEW ANGLE switch.
Black and white contrast on screen?
N
Y
GO TO 9.1
GO TO 1.1
8.2
CHARGE BATTERY! displayed on screen?
N
Y
Connect AC adaptor and recharge batteries for 8 hours.
GO TO 1.2
TRAP displayed on screen?
N
Y
GO TO 7.3
GO TO 15.1

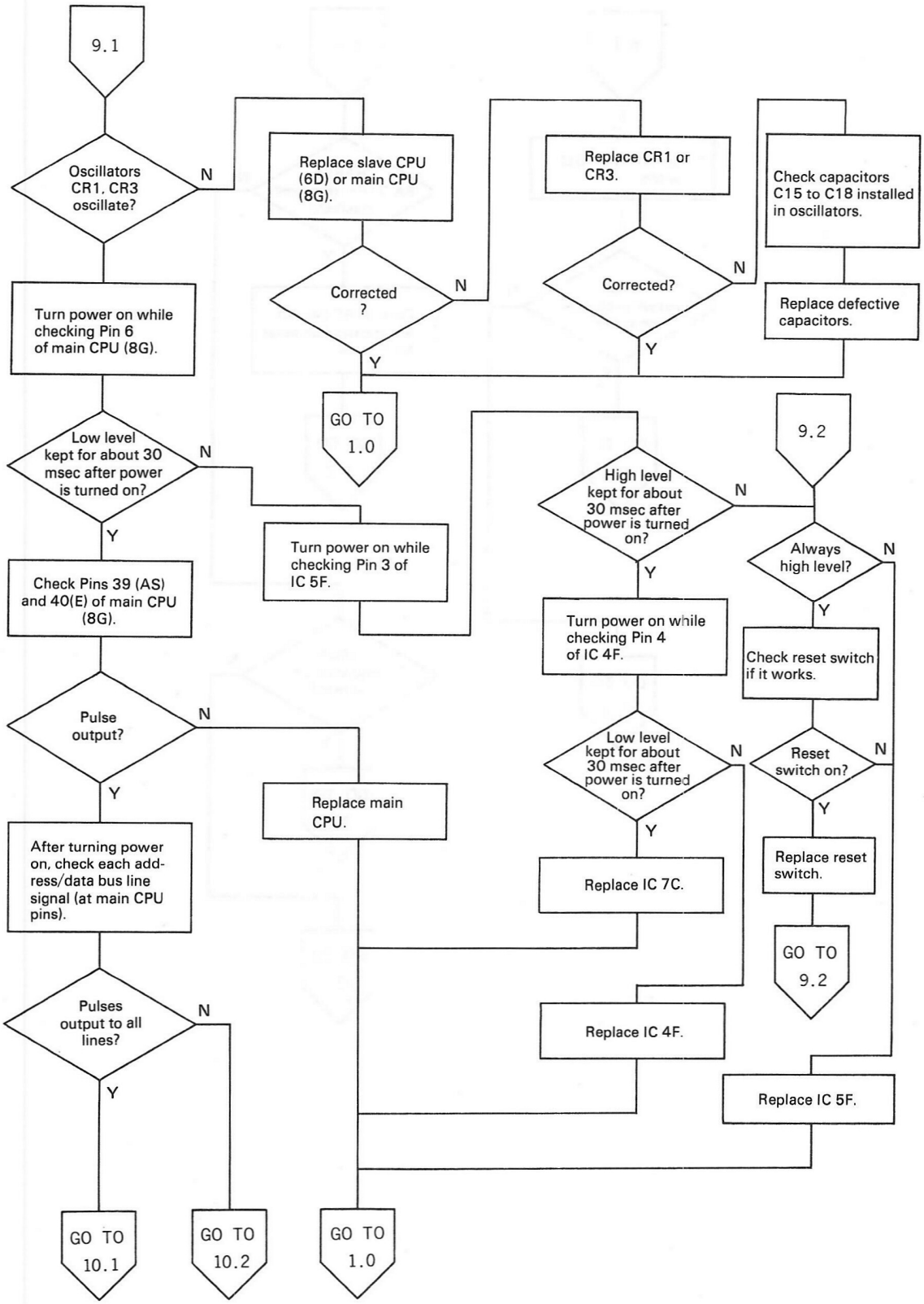
9.1
Oscillators CR1, CR3 oscillate?
N
Replace slave CPU (6D) or main CPU (8G).
Corrected ?
N
Y
Replace CR1 or CR3.
Corrected?
N
Y
Check capacitors C15 to C18 installed in oscillators.
Replace defective capacitors.
Turn power on while checking Pin 6 of main CPU (8G).
GO TO 1.0
Low level kept for about 30 msec after power is turned on?
N
Y
Turn power on while checking Pin 3 of IC 5F.
Check Pins 39 (AS) and 40(E) of main CPU (8G).
Pulse output?
N
Y
Replace main CPU.
After turning power on, check each address/data bus line signal (at main CPU pins).
Pulses output to all lines?
N
Y
GO TO 10.1
GO TO 10.2
GO TO 1.0
9.2
High level kept for about 30 msec after power is turned on?
N
Y
Turn power on while checking Pin 4 of IC 4F.
Low level kept for about 30 msec after power is turned on?
N
Y
Replace IC 7C.
Replace IC 4F.
Always high level?
N
Y
Check reset switch if it works.
Reset switch on?
N
Y
Replace reset switch.
GO TO 9.2
Replace IC 5F.

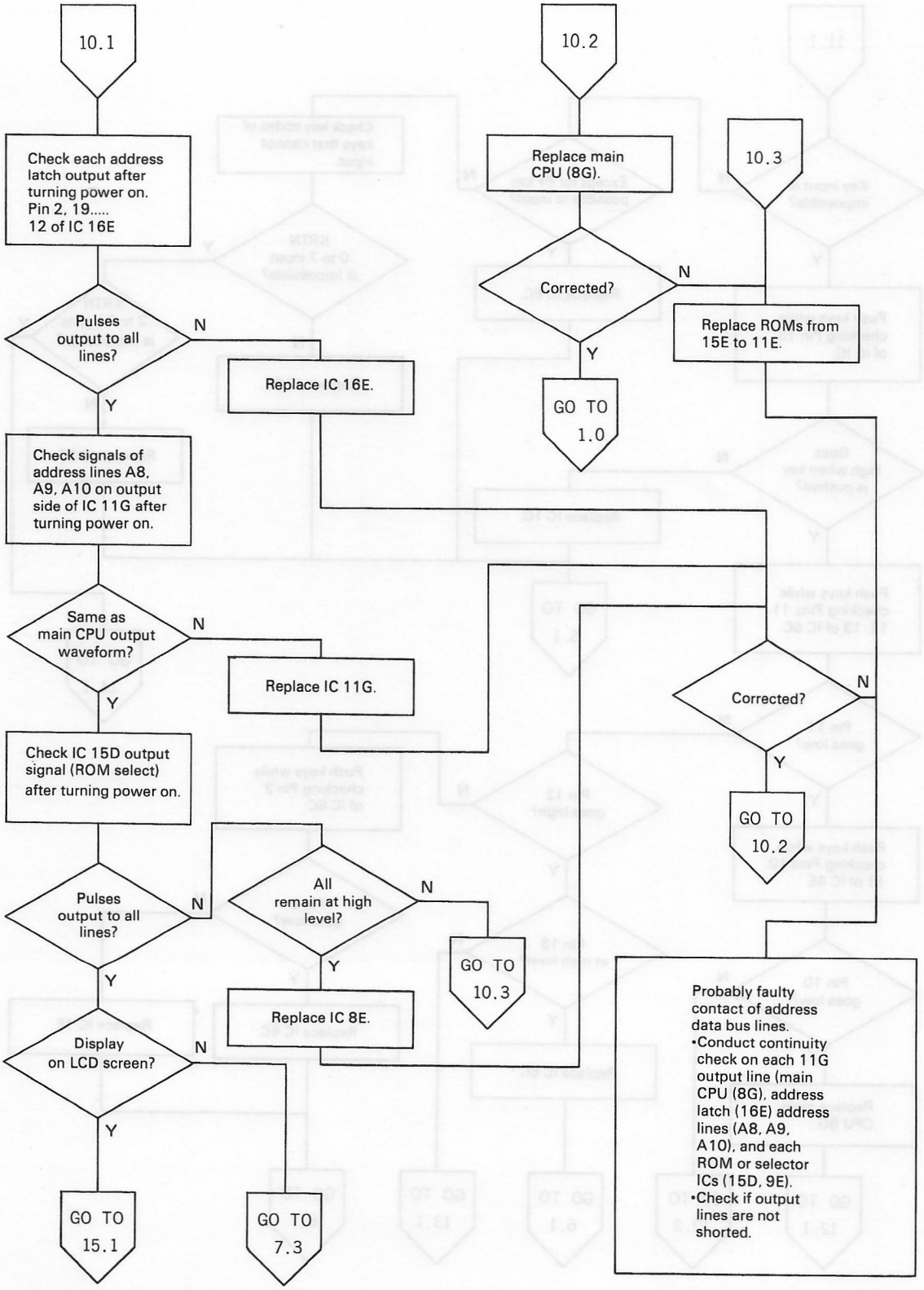
10.1
Check each address latch output after turning power on. Pin 2, 19..... 12 of IC 16E
Pulses output to all lines?
N
Y
Replace IC 16E.
Check signals of address lines A8, A9, A10 on output side of IC 11G after turning power on.
Same as main CPU output waveform?
N
Y
Replace IC 11G.
Check IC 15D output signal (ROM select) after turning power on.
Pulses output to all lines?
N
Y
All remain at high level?
N
Y
GO TO 10.3
Replace IC 8E.
Display on LCD screen?
N
Y
GO TO 15.1
GO TO 7.3
10.2
Replace main CPU (8G).
Corrected?
N
Y
GO TO 1.0
10.3
Replace ROMs from 15E to 11E.
Corrected?
N
Y
GO TO 10.2
Probably faulty contact of address data bus lines.
•Conduct continuity check on each 11G output line (main CPU (8G), address latch (16E) address lines (A8, A9, A10), and each ROM or selector ICs (15D, 9E).
•Check if output lines are not shorted.

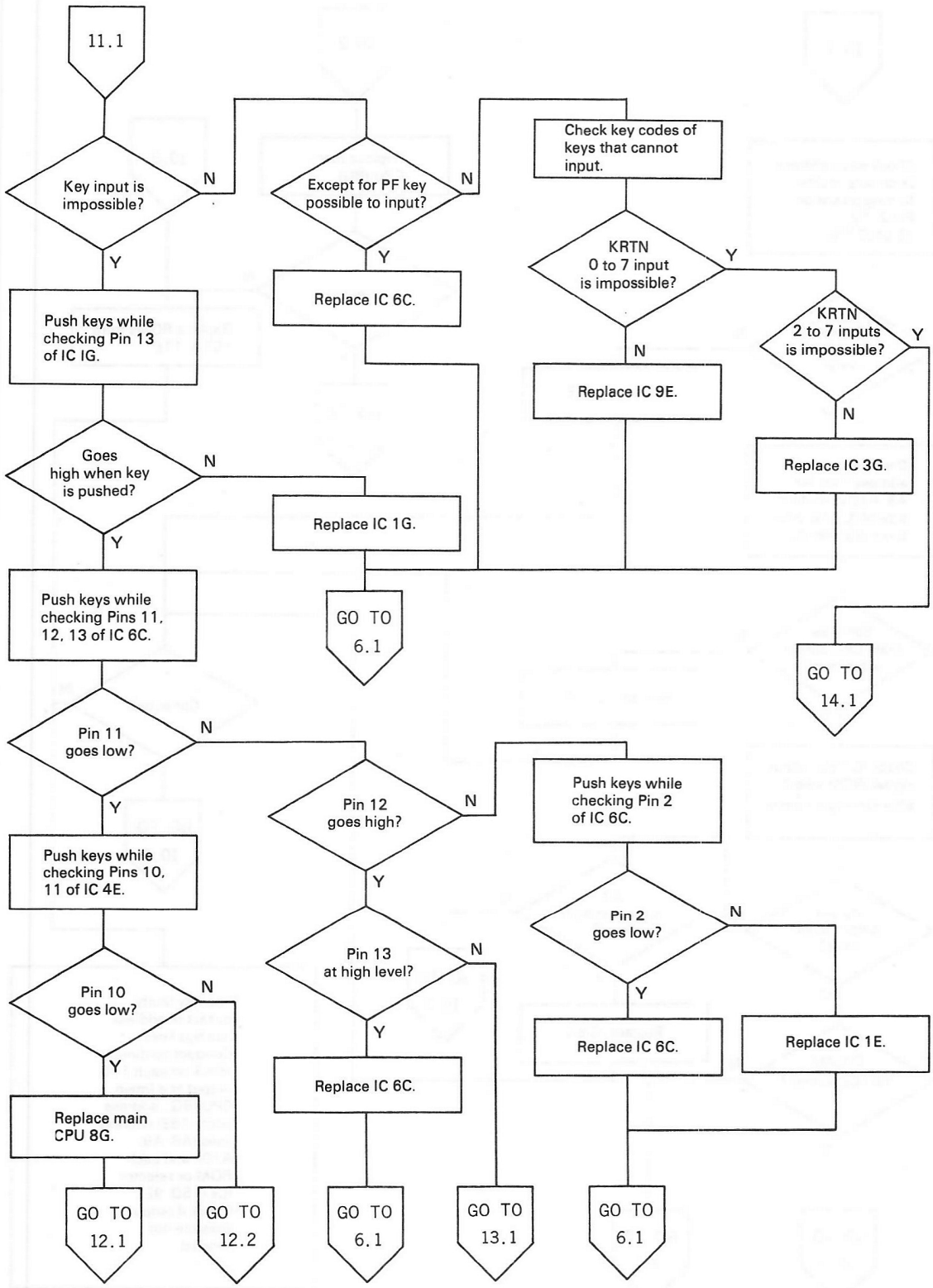
11.1
Key input is impossible?
N
Y
Except for PF key possible to input?
N
Y
Check key codes of keys that cannot input.
KRTN 0 to 7 input is impossible?
Y
N
KRTN 2 to 7 inputs is impossible?
Y
N
Push keys while checking Pin 13 of IC IG.
Replace IC 6C.
Replace IC 9E.
Replace IC 3G.
Goes high when key is pushed?
N
Y
Replace IC 1G.
Push keys while checking Pins 11, 12, 13 of IC 6C.
GO TO 6.1
GO TO 14.1
Pin 11 goes low?
N
Y
Pin 12 goes high?
N
Y
Push keys while checking Pin 2 of IC 6C.
Push keys while checking Pins 10, 11 of IC 4E.
Pin 13 at high level?
N
Y
Pin 2 goes low?
N
Y
Pin 10 goes low?
N
Y
Replace IC 6C.
Replace IC 1E.
Replace main CPU 8G.
Replace IC 6C.
GO TO 12.1
GO TO 12.2
GO TO 6.1
GO TO 13.1
GO TO 6.1

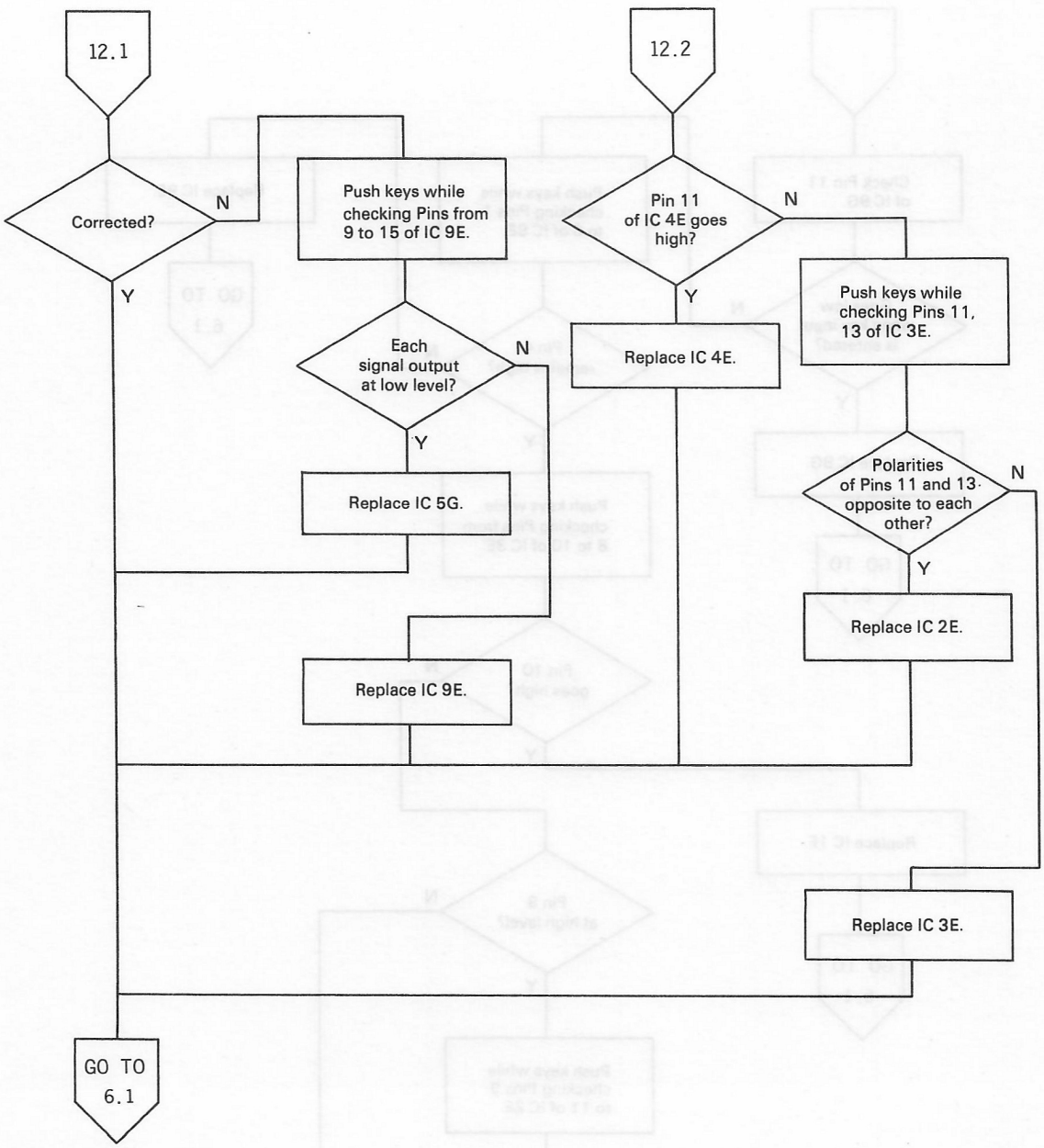
12.1
Corrected?
N
Y
Push keys while checking Pins from 9 to 15 of IC 9E.
Each signal output at low level?
N
Y
Replace IC 5G.
Replace IC 9E.
12.2
Pin 11 of IC 4E goes high?
N
Y
Replace IC 4E.
Push keys while checking Pins 11, 13 of IC 3E.
Polarities of Pins 11 and 13 opposite to each other?
N
Y
Replace IC 2E.
Replace IC 3E.
GO TO 6.1

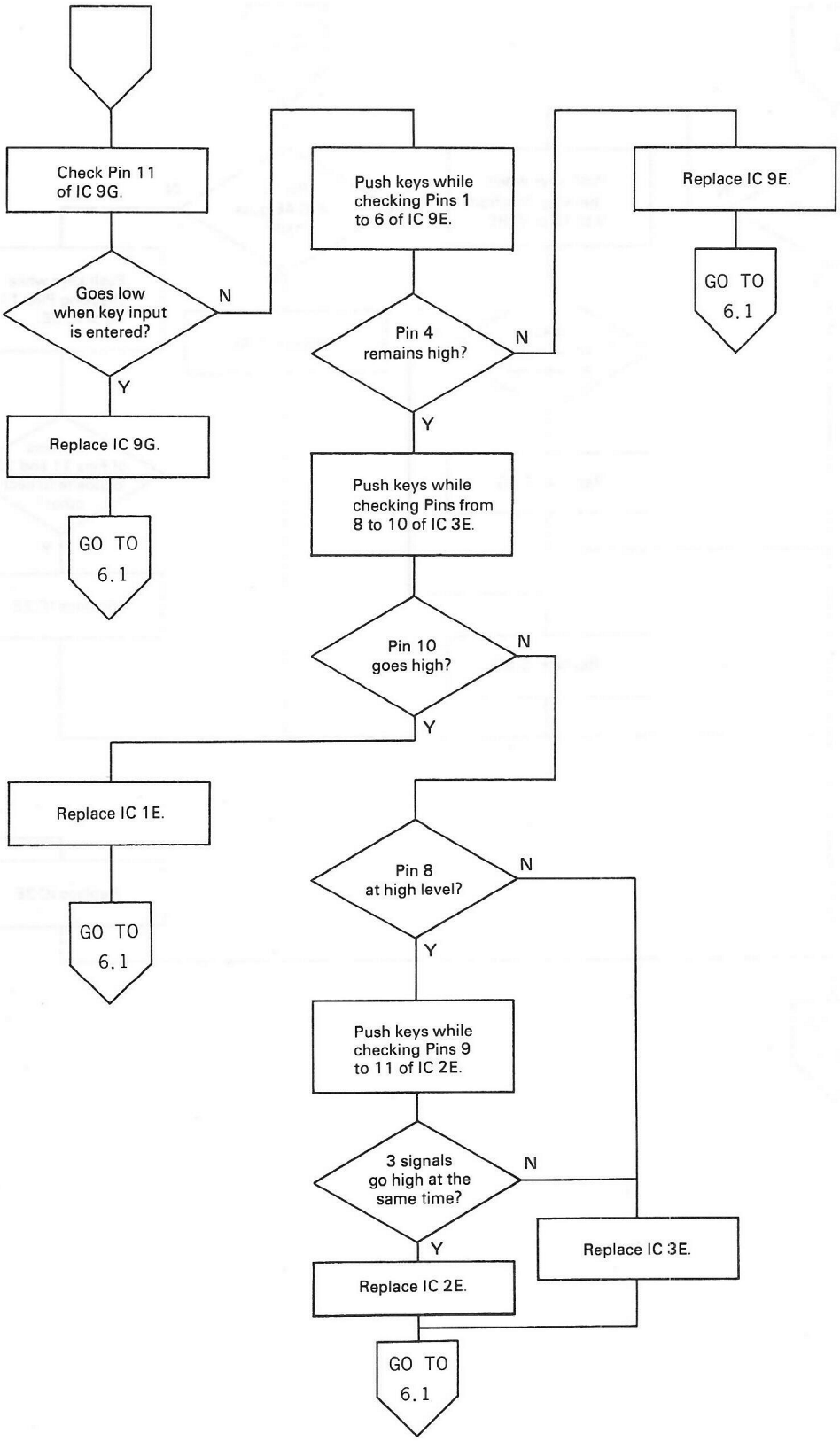
Check Pin 11 of IC 9G.
Goes low when key input is entered?
N
Y
Replace IC 9G.
GO TO 6.1
Push keys while checking Pins 1 to 6 of IC 9E.
Pin 4 remains high?
N
Y
Replace IC 9E.
GO TO 6.1
Push keys while checking Pins from 8 to 10 of IC 3E.
Pin 10 goes high?
N
Y
Replace IC 1E.
GO TO 6.1
Pin 8 at high level?
N
Y
Push keys while checking Pins 9 to 11 of IC 2E.
3 signals go high at the same time?
N
Y
Replace IC 3E.
Replace IC 2E.
GO TO 6.1

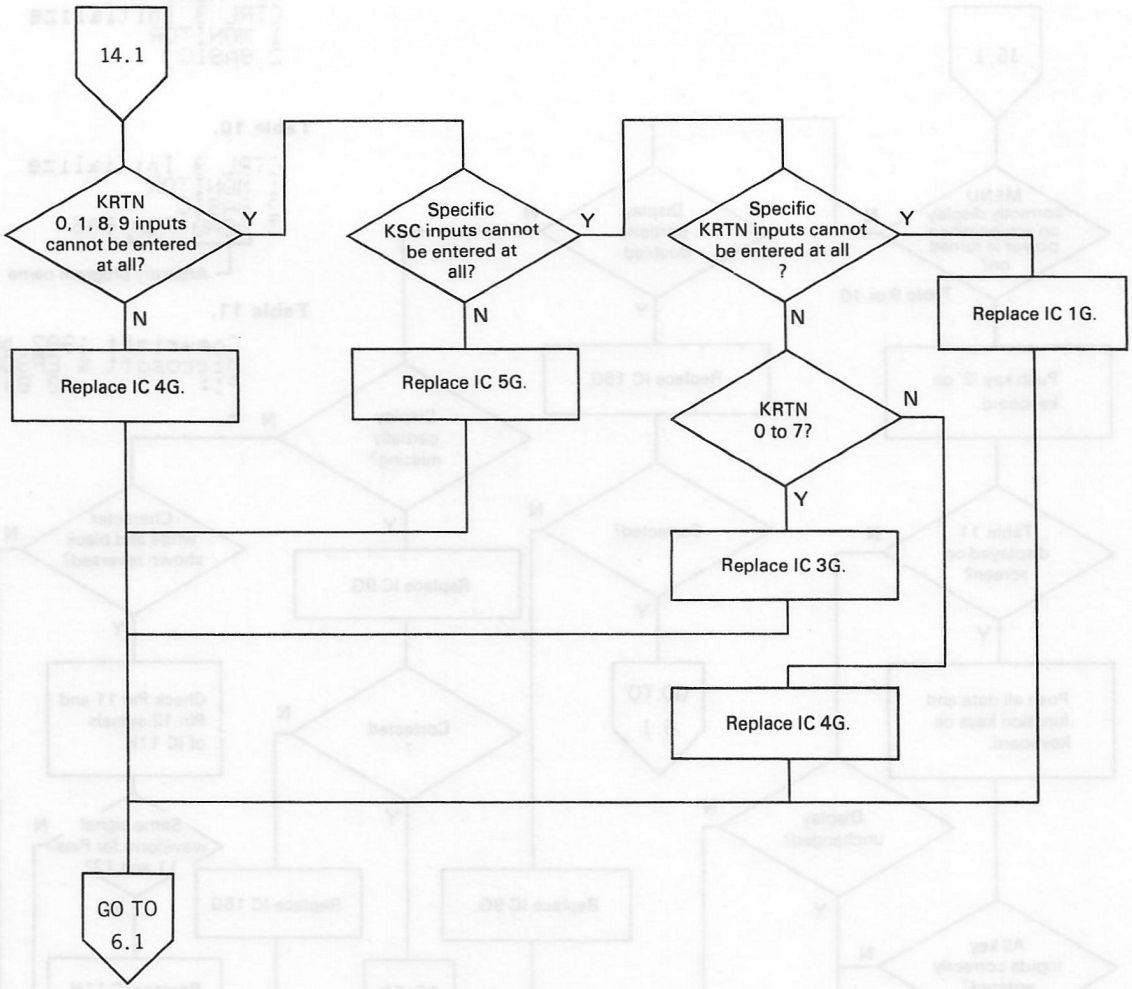
14.1
KRTN
0, 1, 8, 9 inputs
cannot be entered
at all?
Y
N
Specific
KSC inputs cannot
be entered at
all?
Y
N
Specific
KRTN inputs cannot
be entered at all
?
Y
N
Replace IC 1G.
Replace IC 4G.
Replace IC 5G.
KRTN
0 to 7?
N
Y
Replace IC 3G.
Replace IC 4G.
GO TO
6.1

Table 9.

```
*** MENU ***
CTRL/@ Initialize
1 MONITOR
2 BASIC
```

Table 10.

```
CTRL/@ Initialize
1 MONITOR
2 BASIC
3 DEMO PGM BAS
```

Arbitrary program name

Table 11.

```
Copyright 1982 by
Microsoft & EPSON
P1:          0 Bytes
>
```

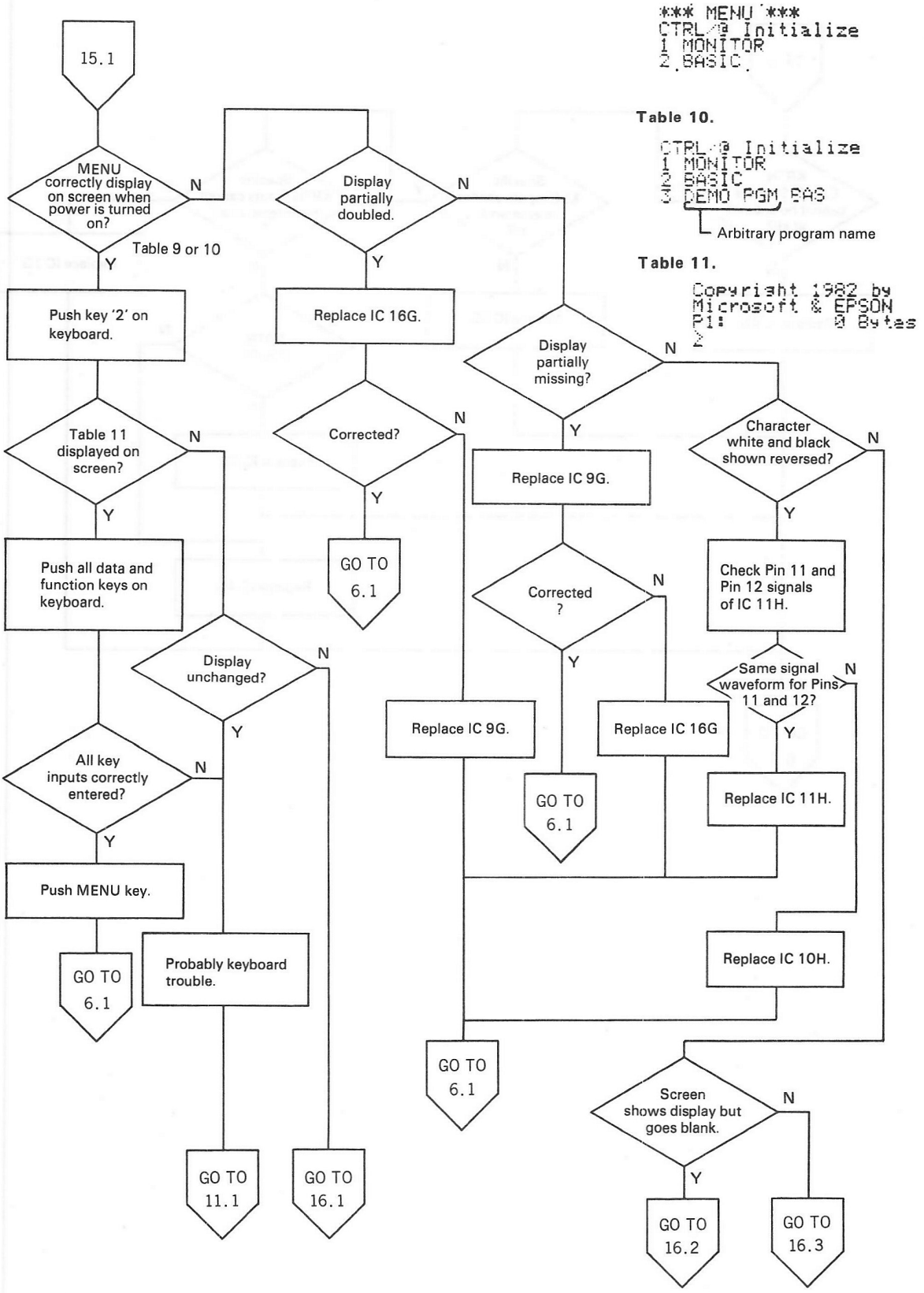

Table 12.

```
Copyright 1982 by
Microsoft & EPSON
Fi:       0 Bytes
22222222222_
```

Table 13.

```
right 1982 by
osoft & EPSON
        0 Bytes
2222222222222222_
```

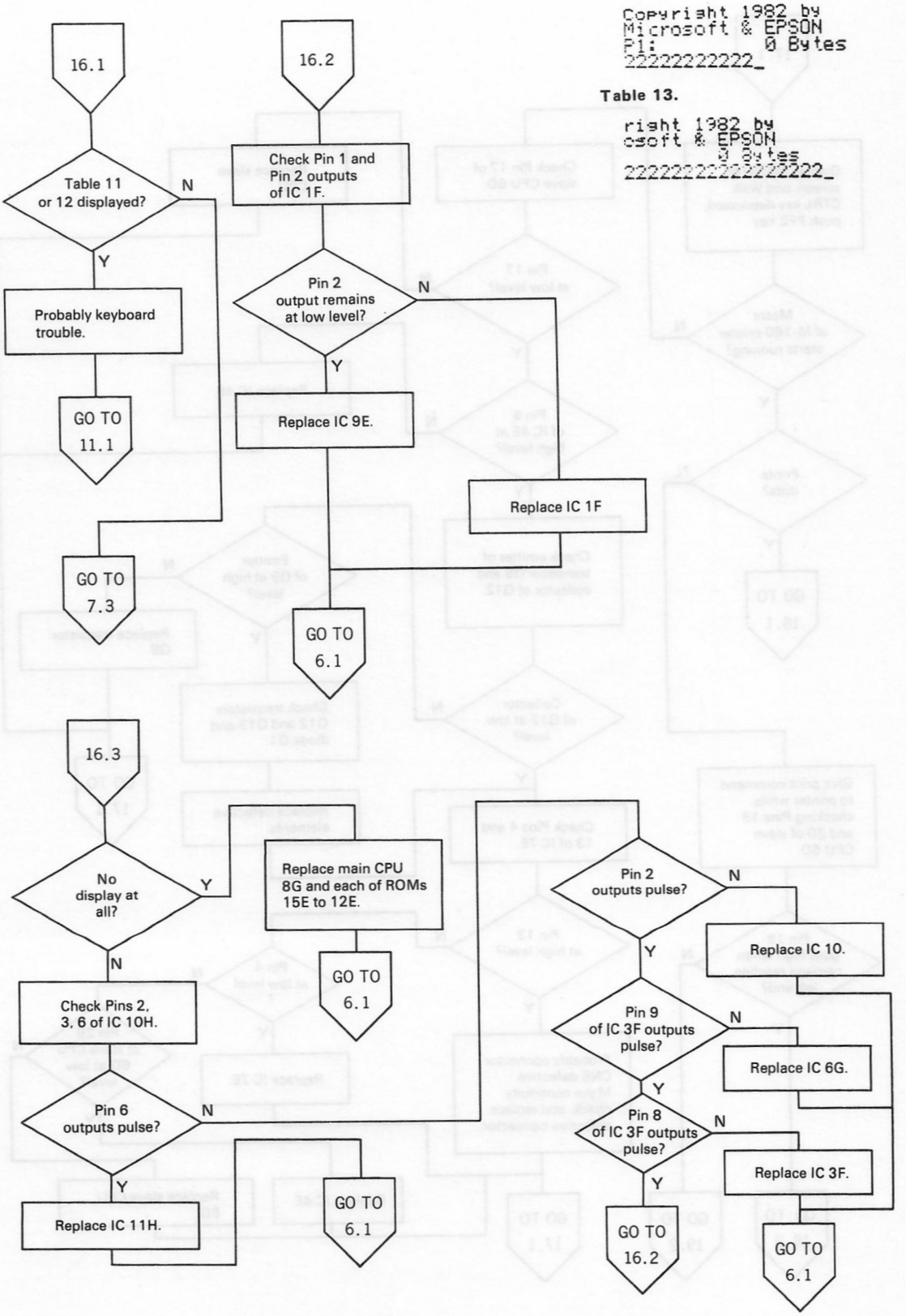

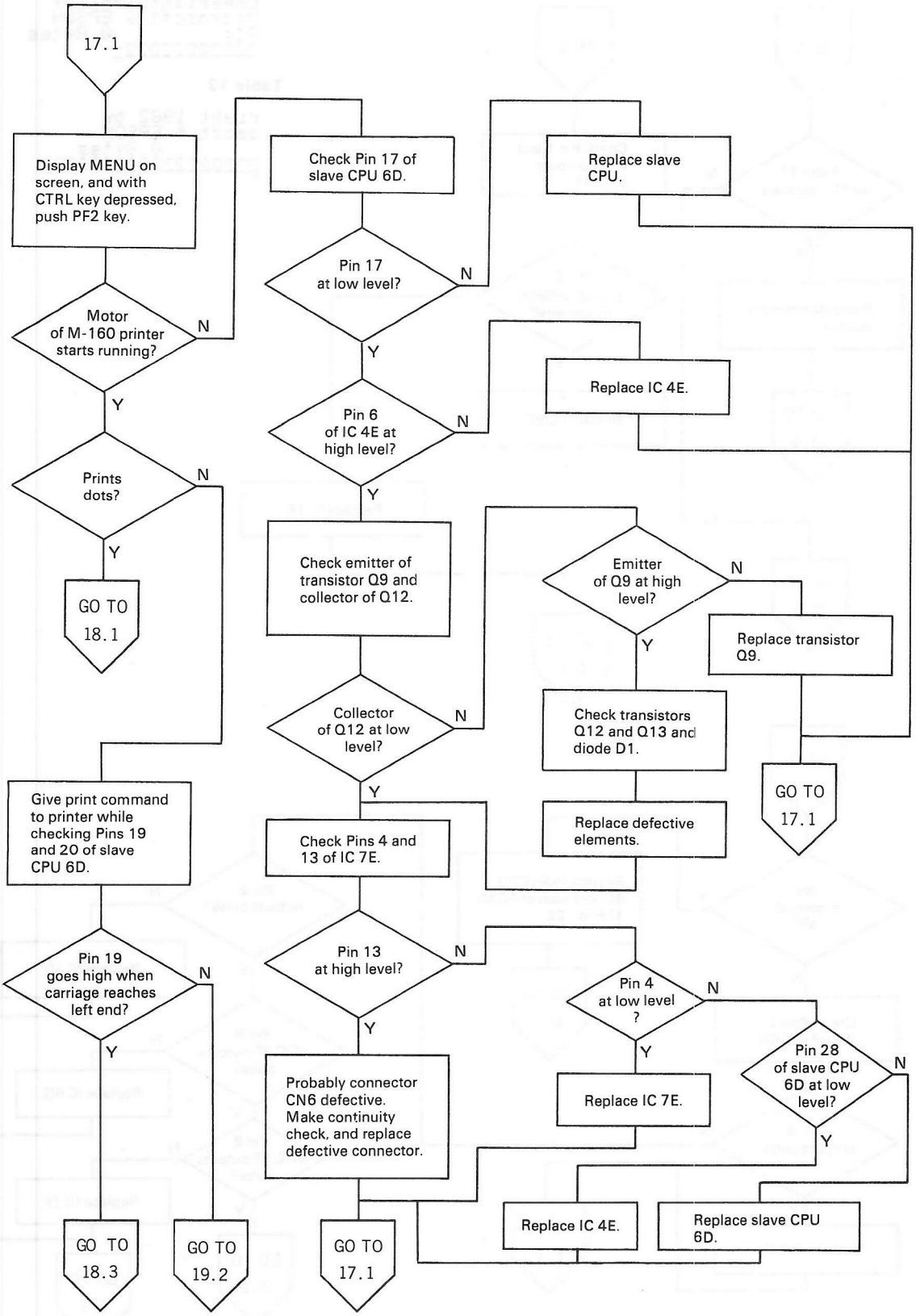
17.1
Display MENU on screen, and with CTRL key depressed, push PF2 key.
Motor of M-160 printer starts running?
N
Y
Prints dots?
N
Y
GO TO 18.1
Give print command to printer while checking Pins 19 and 20 of slave CPU 6D.
Pin 19 goes high when carriage reaches left end?
N
Y
GO TO 18.3
GO TO 19.2
Check Pin 17 of slave CPU 6D.
Pin 17 at low level?
N
Y
Pin 6 of IC 4E at high level?
N
Y
Check emitter of transistor Q9 and collector of Q12.
Collector of Q12 at low level?
N
Y
Check Pins 4 and 13 of IC 7E.
Pin 13 at high level?
N
Y
Probably connector CN6 defective. Make continuity check, and replace defective connector.
GO TO 17.1
Replace slave CPU.
Replace IC 4E.
Emitter of Q9 at high level?
N
Y
Replace transistor Q9.
Check transistors Q12 and Q13 and diode D1.
Replace defective elements.
GO TO 17.1
Pin 4 at low level ?
N
Y
Replace IC 7E.
Pin 28 of slave CPU 6D at low level?
N
Y
Replace IC 4E.
Replace slave CPU 6D.

Table 14.

Head	Printing position
H1	1～36 dots (1～6)
H2	37～72 dots (7～12)
H3	73～108 dots (13～18)
H3	109～144 dots (19～24)

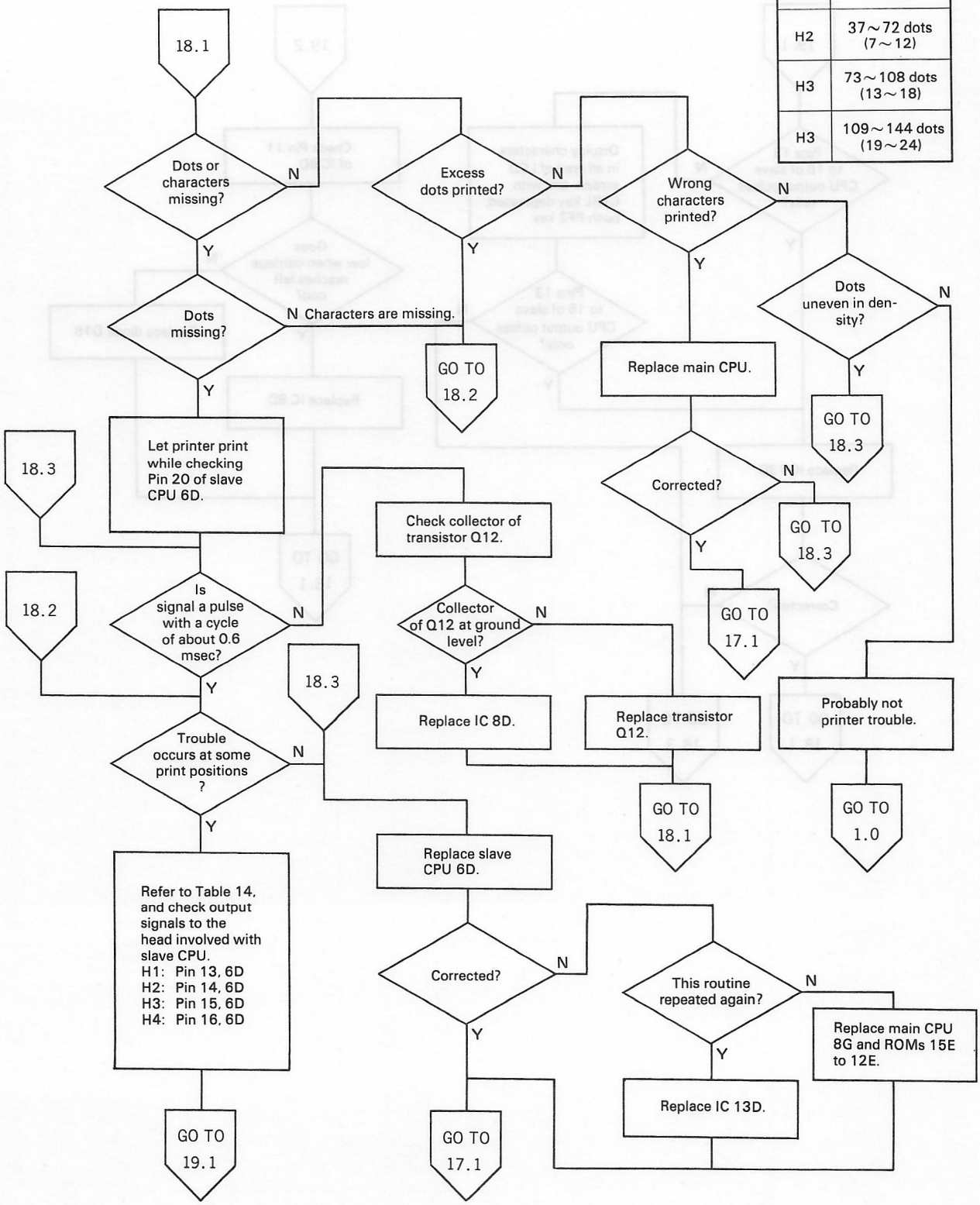

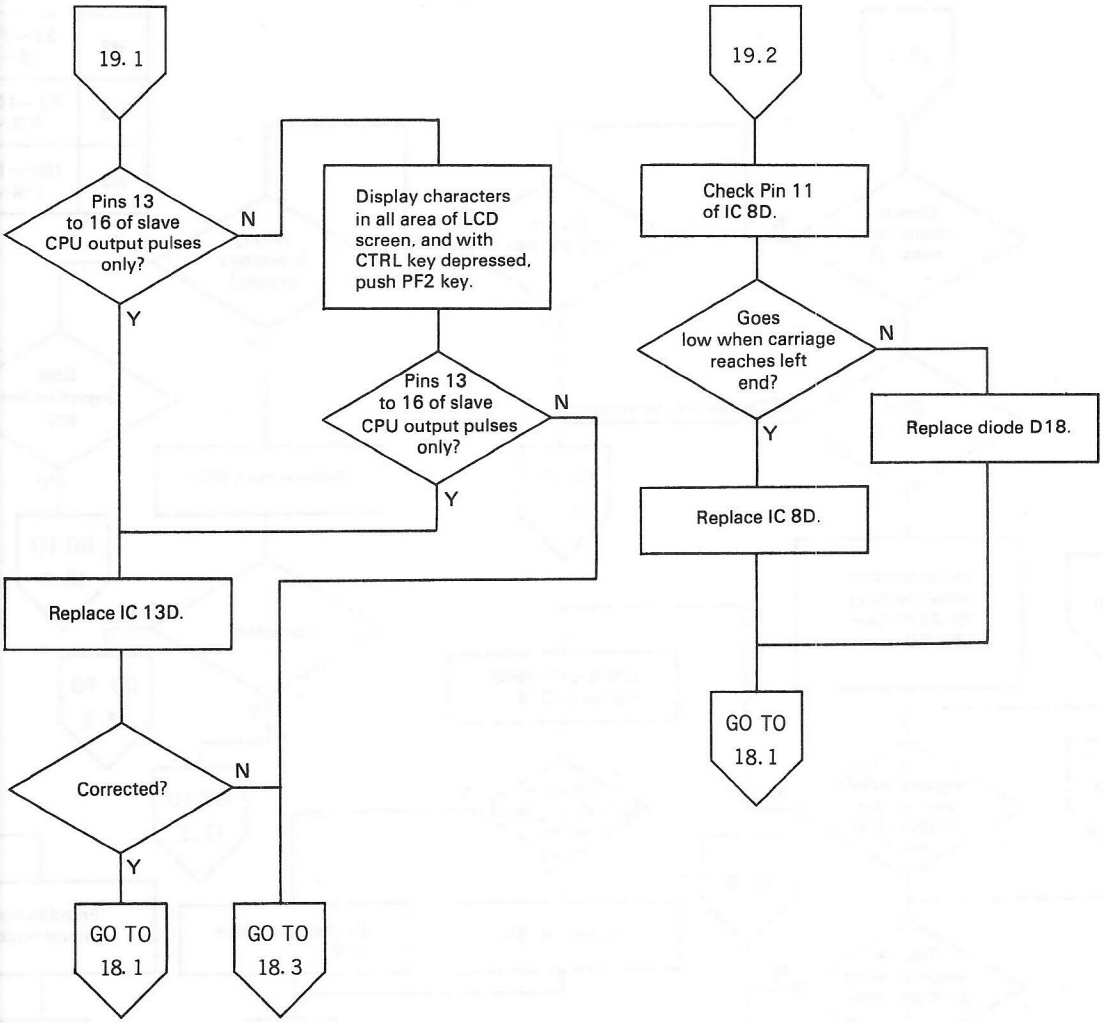
19. 1
Pins 13 to 16 of slave CPU output pulses only?
N
Y
Display characters in all area of LCD screen, and with CTRL key depressed, push PF2 key.
Pins 13 to 16 of slave CPU output pulses only?
N
Y
Replace IC 13D.
Corrected?
N
Y
GO TO 18. 1
GO TO 18. 3
19. 2
Check Pin 11 of IC 8D.
Goes low when carriage reaches left end?
N
Y
Replace diode D18.
Replace IC 8D.
GO TO 18. 1

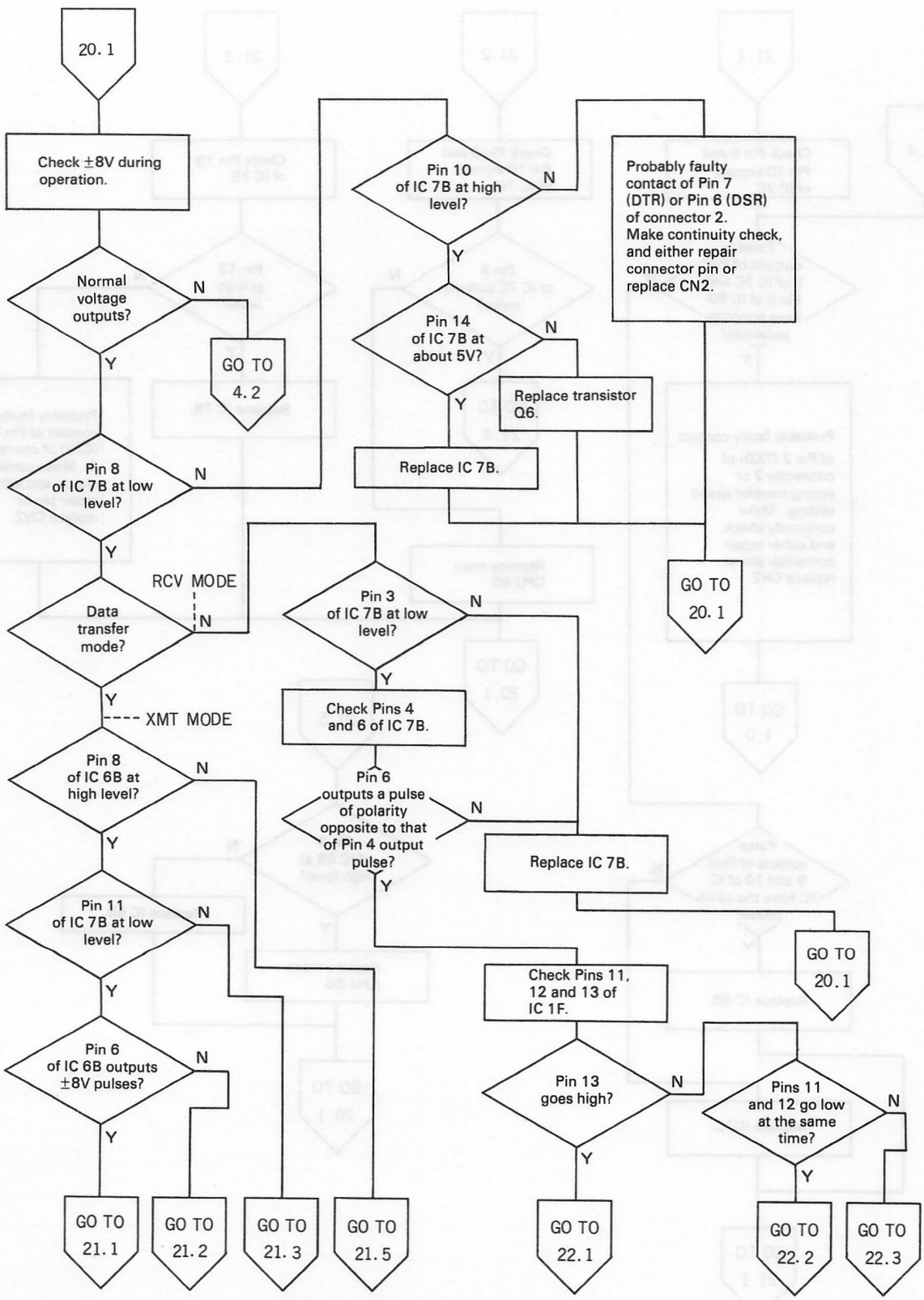
20. 1
Check ±8V during operation.
Normal voltage outputs?
N
Y
GO TO 4. 2
Pin 8 of IC 7B at low level?
N
Y
RCV MODE
Data transfer mode?
N
Y
---- XMT MODE
Pin 8 of IC 6B at high level?
N
Y
Pin 11 of IC 7B at low level?
N
Y
Pin 6 of IC 6B outputs ±8V pulses?
N
Y
GO TO 21. 1
GO TO 21. 2
GO TO 21. 3
GO TO 21. 5
Pin 10 of IC 7B at high level?
N
Y
Pin 14 of IC 7B at about 5V?
N
Y
Replace transistor Q6.
Replace IC 7B.
Probably faulty contact of Pin 7 (DTR) or Pin 6 (DSR) of connector 2. Make continuity check, and either repair connector pin or replace CN2.
GO TO 20. 1
Pin 3 of IC 7B at low level?
N
Y
Check Pins 4 and 6 of IC 7B.
Pin 6 outputs a pulse of polarity opposite to that of Pin 4 output pulse?
N
Y
Replace IC 7B.
GO TO 20. 1
Check Pins 11, 12 and 13 of IC 1F.
Pin 13 goes high?
N
Y
Pins 11 and 12 go low at the same time?
N
Y
GO TO 22. 1
GO TO 22. 2
GO TO 22. 3

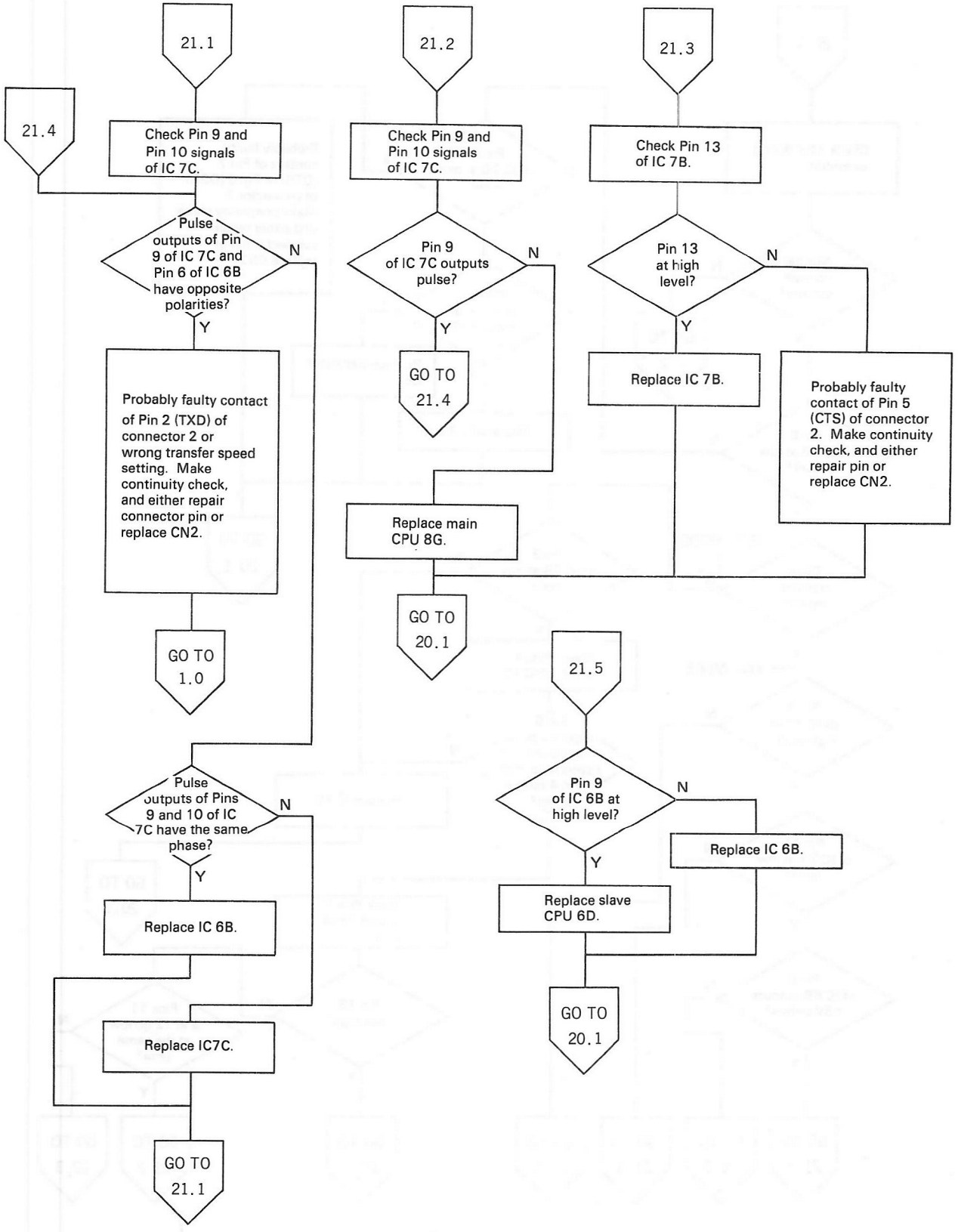
21.1
21.2
21.3
21.4
Check Pin 9 and Pin 10 signals of IC 7C.
Check Pin 9 and Pin 10 signals of IC 7C.
Check Pin 13 of IC 7B.
Pulse outputs of Pin 9 of IC 7C and Pin 6 of IC 6B have opposite polarities?
N
Y
Pin 9 of IC 7C outputs pulse?
N
Y
Pin 13 at high level?
N
Y
Probably faulty contact of Pin 2 (TXD) of connector 2 or wrong transfer speed setting. Make continuity check, and either repair connector pin or replace CN2.
GO TO 21.4
Replace IC 7B.
Probably faulty contact of Pin 5 (CTS) of connector 2. Make continuity check, and either repair pin or replace CN2.
Replace main CPU 8G.
GO TO 1.0
GO TO 20.1
21.5
Pulse outputs of Pins 9 and 10 of IC 7C have the same phase?
N
Y
Pin 9 of IC 6B at high level?
N
Y
Replace IC 6B.
Replace slave CPU 6D.
Replace IC 6B.
Replace IC7C.
GO TO 20.1
GO TO 21.1

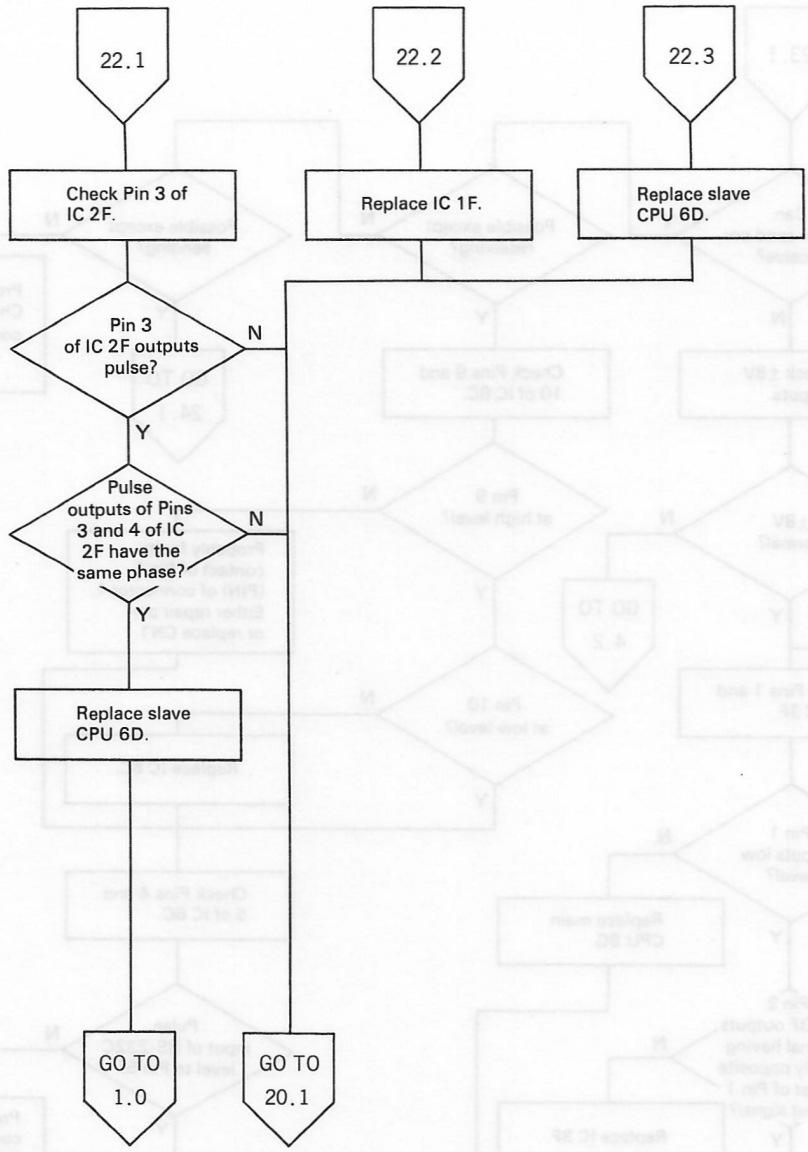
22.1
22.2
22.3
Check Pin 3 of IC 2F.
Replace IC 1F.
Replace slave CPU 6D.
Pin 3 of IC 2F outputs pulse?
N
Y
Pulse outputs of Pins 3 and 4 of IC 2F have the same phase?
N
Y
Replace slave CPU 6D.
GO TO 1.0
GO TO 20.1

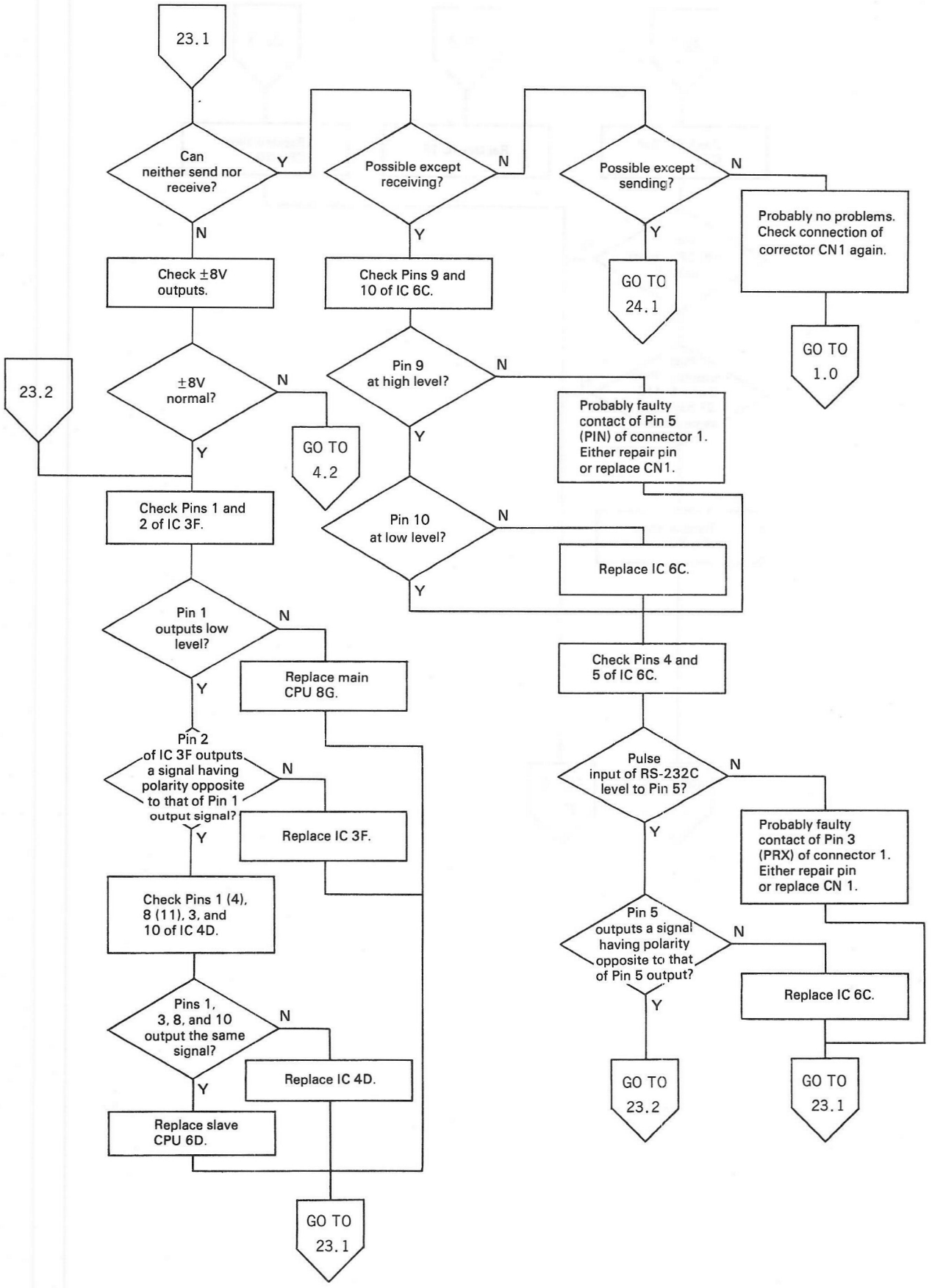
23.1
Can neither send nor receive?
Y
N
Possible except receiving?
N
Y
Possible except sending?
N
Y
Probably no problems. Check connection of corrector CN1 again.
GO TO 1.0
GO TO 24.1
Check ±8V outputs.
Check Pins 9 and 10 of IC 6C.
23.2
±8V normal?
N
Y
GO TO 4.2
Pin 9 at high level?
N
Y
Probably faulty contact of Pin 5 (PIN) of connector 1. Either repair pin or replace CN1.
Check Pins 1 and 2 of IC 3F.
Pin 10 at low level?
N
Y
Replace IC 6C.
Pin 1 outputs low level?
N
Y
Replace main CPU 8G.
Check Pins 4 and 5 of IC 6C.
Pin 2 of IC 3F outputs a signal having polarity opposite to that of Pin 1 output signal?
N
Y
Replace IC 3F.
Pulse input of RS-232C level to Pin 5?
N
Y
Probably faulty contact of Pin 3 (PRX) of connector 1. Either repair pin or replace CN 1.
Check Pins 1 (4), 8 (11), 3, and 10 of IC 4D.
Pin 5 outputs a signal having polarity opposite to that of Pin 5 output?
N
Y
Replace IC 6C.
Pins 1, 3, 8, and 10 output the same signal?
N
Y
Replace IC 4D.
GO TO 23.2
GO TO 23.1
Replace slave CPU 6D.
GO TO 23.1

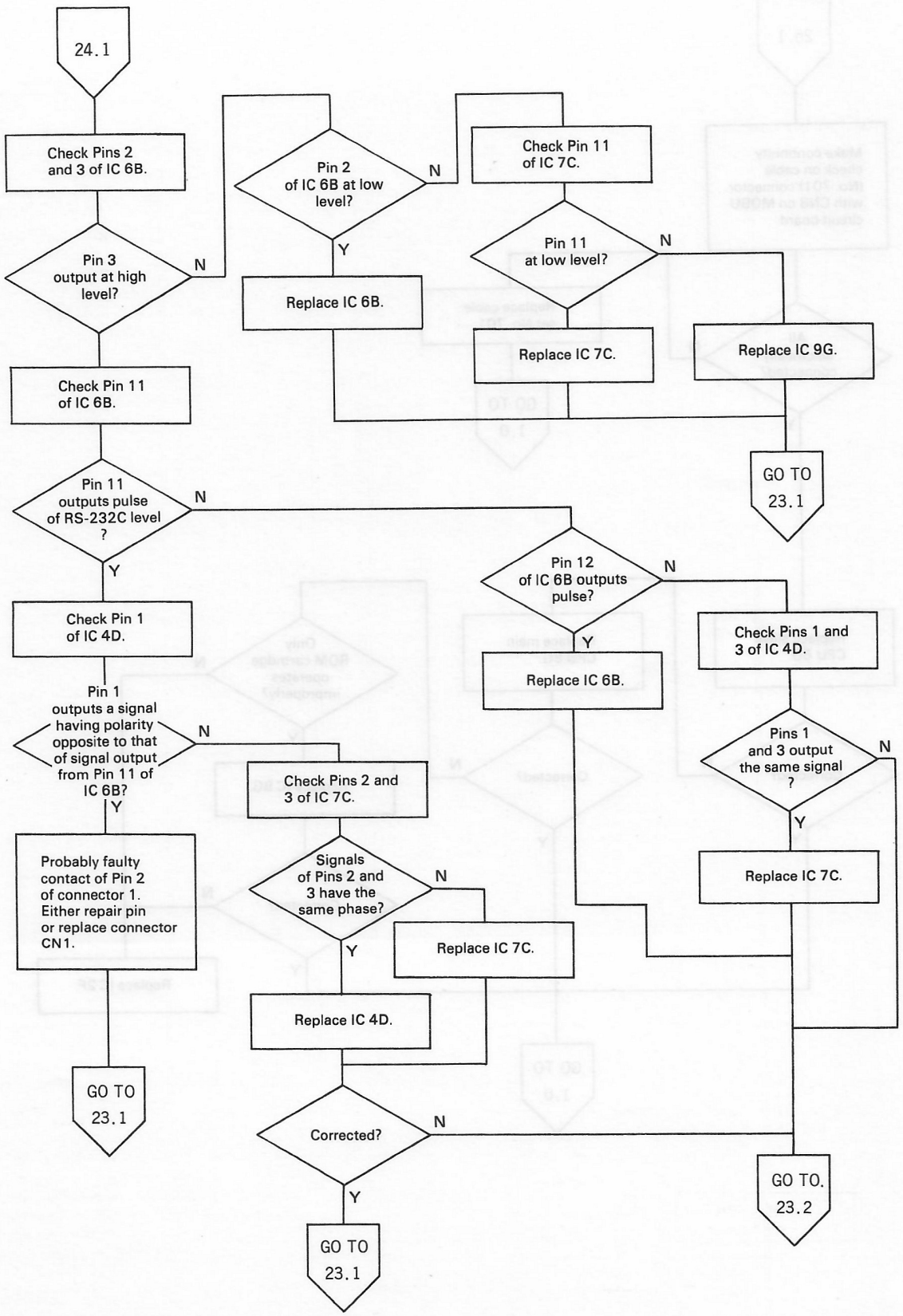
24.1
Check Pins 2 and 3 of IC 6B.
Pin 3 output at high level?
N
Y
Pin 2 of IC 6B at low level?
N
Y
Replace IC 6B.
Check Pin 11 of IC 7C.
Pin 11 at low level?
N
Y
Replace IC 7C.
Replace IC 9G.
GO TO 23.1
Check Pin 11 of IC 6B.
Pin 11 outputs pulse of RS-232C level ?
N
Y
Pin 12 of IC 6B outputs pulse?
N
Y
Replace IC 6B.
Check Pin 1 of IC 4D.
Check Pins 1 and 3 of IC 4D.
Pin 1 outputs a signal having polarity opposite to that of signal output from Pin 11 of IC 6B?
N
Y
Pins 1 and 3 output the same signal ?
N
Y
Replace IC 7C.
Probably faulty contact of Pin 2 of connector 1. Either repair pin or replace connector CN1.
Check Pins 2 and 3 of IC 7C.
Signals of Pins 2 and 3 have the same phase?
N
Y
Replace IC 7C.
Replace IC 4D.
GO TO 23.1
Corrected?
N
Y
GO TO 23.1
GO TO. 23.2

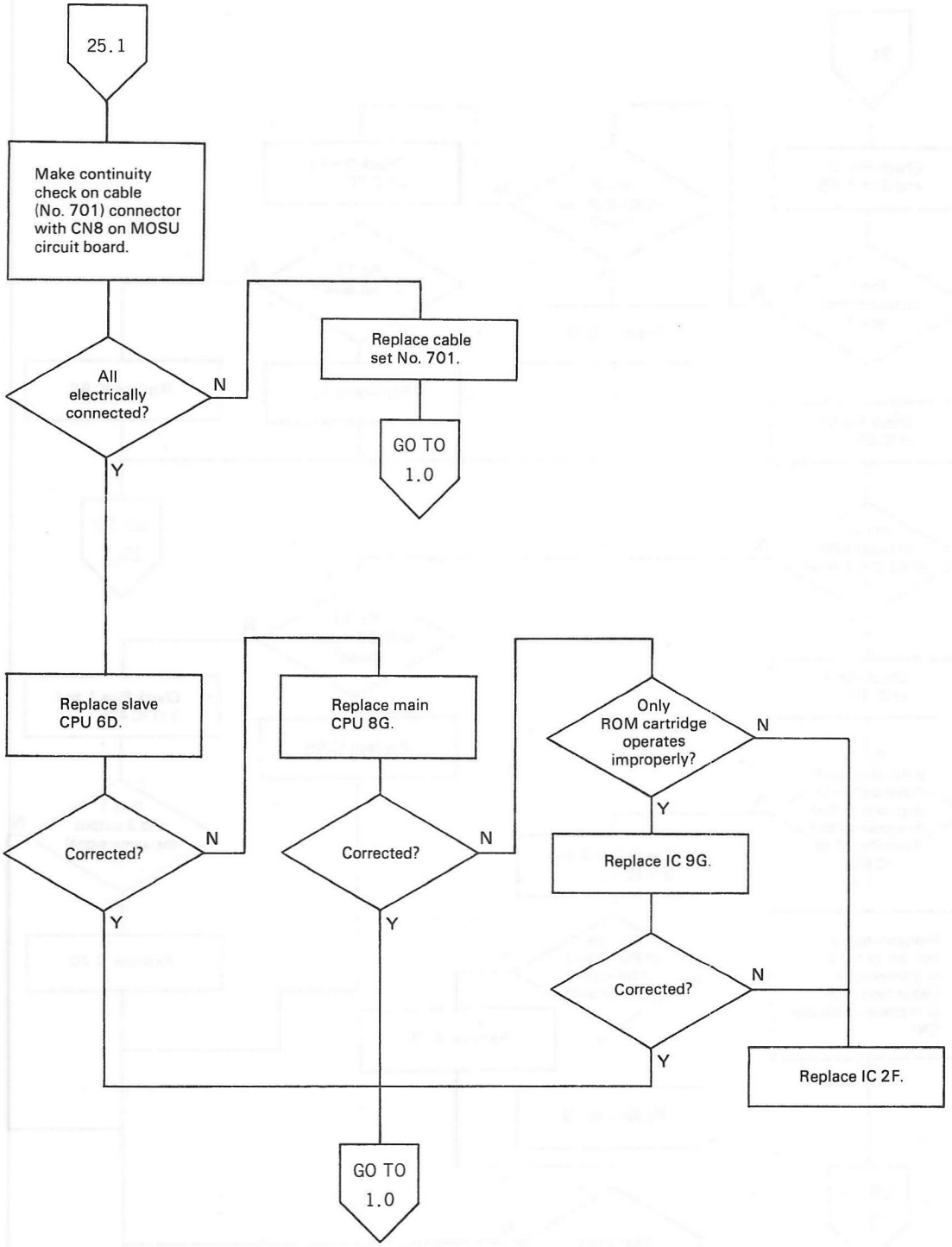
25.1
Make continuity check on cable (No. 701) connector with CN8 on MOSU circuit board.
All electrically connected?
N
Y
Replace cable set No. 701.
GO TO 1.0
Replace slave CPU 6D.
Corrected?
N
Y
Replace main CPU 8G.
Corrected?
N
Y
Only ROM cartridge operates improperly?
N
Y
Replace IC 9G.
Corrected?
N
Y
Replace IC 2F.
GO TO 1.0

Read/Write to (and from) RAM

- Read/write to (and from) RAM can be tested by selecting the monitor mode from the MENU display on the screen.
  This flow chart requires a write operation to the designated address for a signal check. Read the following description, and enter the troubleshooting flow chart.

26.1

Steps

1. Push key 1 to select the monitor mode from the MENU display.

```
*** MENU ***
CTRL/@ Initialize
1 MONITOR
2 BASIC
```

Monitor display

```
-
MONITOR
 A=32 B=00   X=0297
 C=C0 S=07DB P=0008
```

2. Input the desired address Sxxxx.
   Address

```
-S1000
MONITOR
 A=32 B=00   X=0297
 C=C0 S=07DB P=0008
```

Address 1000

Push the return key to display the data of the designated address.

```
-S1000 00 _
MONITOR
 A=32 B=00   X=0297
 C=C0 S=07DB P=0008
```

Data of address 1000

3. Input the data to be written in hexadecimals.
   xx
   2 digits

```
-S1000 00 FF_
MONITOR
 A=32 B=00   X=0297
 C=C0 S=07DB P=0008
```

Push the return key to write the data.

```
-S 1001 00 _
MONITOR
 A=32 B=00   X=0297
 C=C0 S=07DB P=0008
```

Next address and data are displayed.

4. If no data input is required, input other than numerals 0 to 9 and characters A to F.

```
-S 1001 00 X_
MONITOR
 A=32 B=00   X=0297
 C=C0 S=07DB P=0008
```

Any character other than 0 to 9 and A to F.

Push the return key to return to the monitor display.

```
-
MONITOR
 A=32 B=00   X=0297
 C=C0 S=07DB P=0008
```

* Write operation can be continued by repeating Step 3.

GO TO 26.1A

Table 15.

Address	IC location	Select signal
0000-07FF	12 G	16D- 7
0800-0FFF	13 G	16D- 9
1000-17FF	14 G	16D-10
1800-1FFF	15 G	16D-11
2000-27FF	16 C	16D-12
2800-2FFF	15 C	16D-13
3000-37FF	14 C	16D-14
3800-3FFF	13 C	5 E- 4 (16D-15)

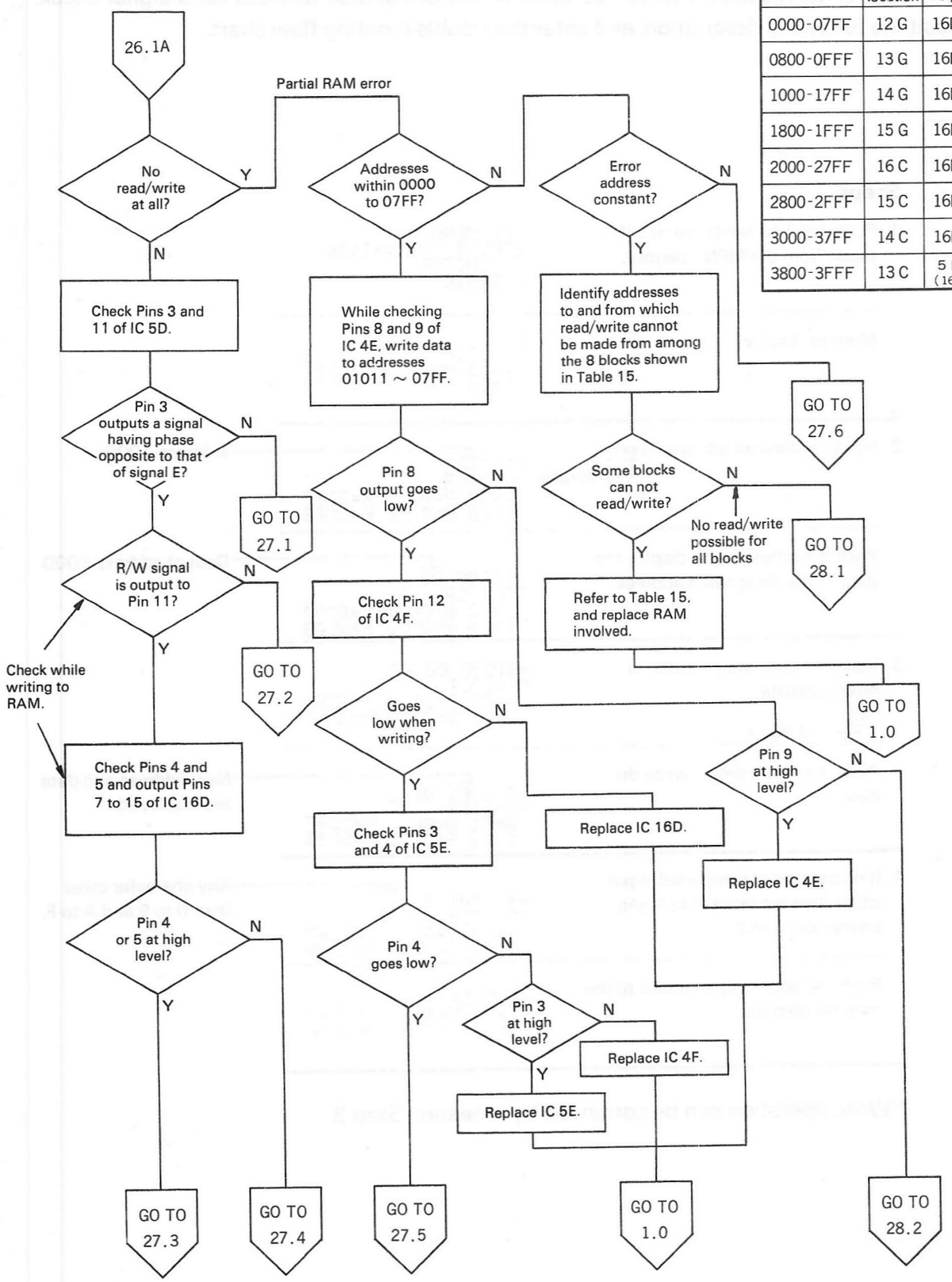

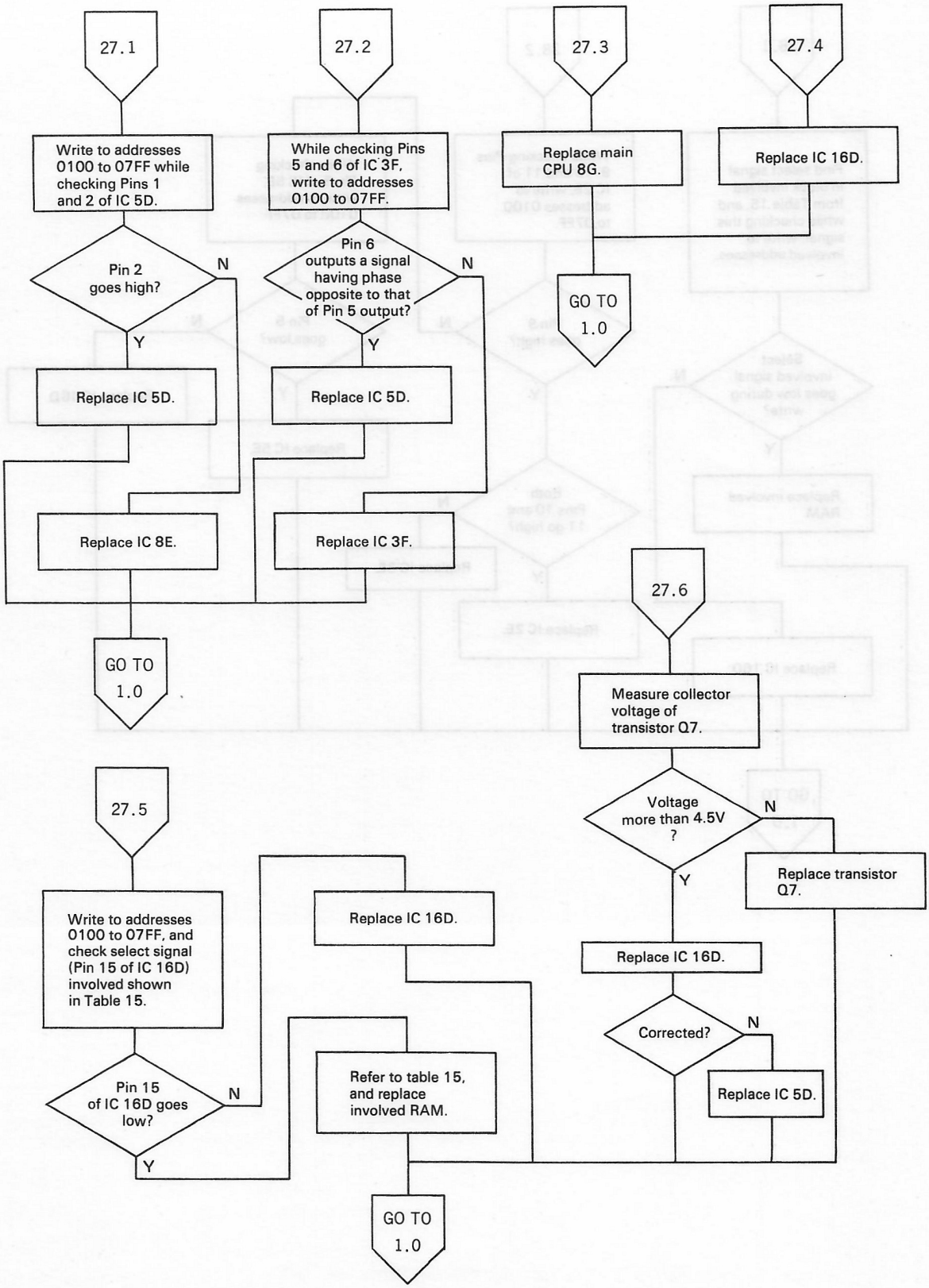
27.1
Write to addresses 0100 to 07FF while checking Pins 1 and 2 of IC 5D.
Pin 2 goes high?
N
Y
Replace IC 5D.
Replace IC 8E.
GO TO 1.0
27.2
While checking Pins 5 and 6 of IC 3F, write to addresses 0100 to 07FF.
Pin 6 outputs a signal having phase opposite to that of Pin 5 output?
N
Y
Replace IC 5D.
Replace IC 3F.
27.3
Replace main CPU 8G.
GO TO 1.0
27.4
Replace IC 16D.
27.5
Write to addresses 0100 to 07FF, and check select signal (Pin 15 of IC 16D) involved shown in Table 15.
Pin 15 of IC 16D goes low?
N
Y
Replace IC 16D.
Refer to table 15, and replace involved RAM.
GO TO 1.0
27.6
Measure collector voltage of transistor Q7.
Voltage more than 4.5V ?
N
Y
Replace transistor Q7.
Replace IC 16D.
Corrected?
N
Replace IC 5D.

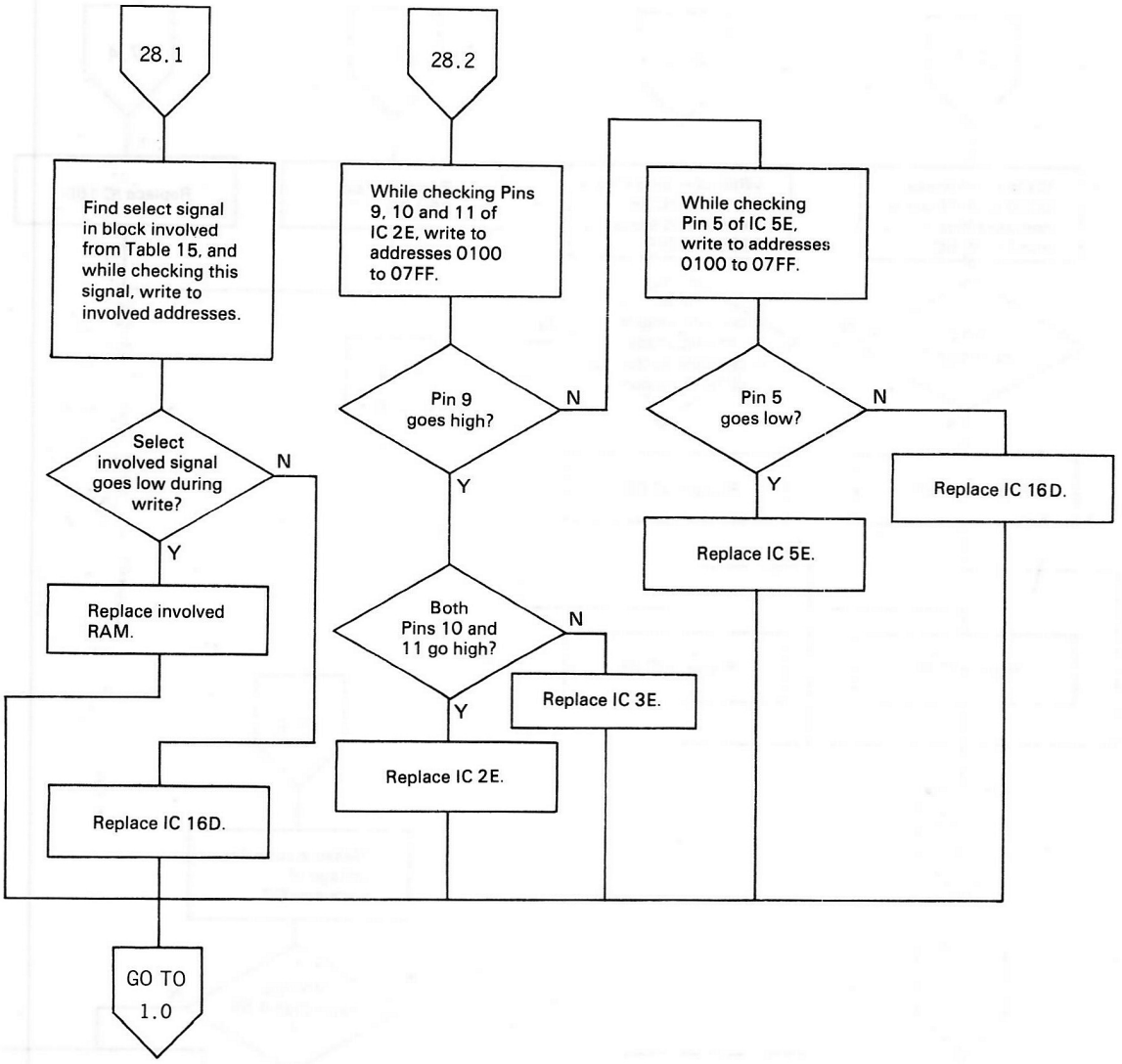
28.1
Find select signal in block involved from Table 15, and while checking this signal, write to involved addresses.
Select involved signal goes low during write?
N
Y
Replace involved RAM.
Replace IC 16D.
GO TO 1.0
28.2
While checking Pins 9, 10 and 11 of IC 2E, write to addresses 0100 to 07FF.
Pin 9 goes high?
N
Y
Both Pins 10 and 11 go high?
N
Y
Replace IC 3E.
Replace IC 2E.
While checking Pin 5 of IC 5E, write to addresses 0100 to 07FF.
Pin 5 goes low?
N
Y
Replace IC 16D.
Replace IC 5E.

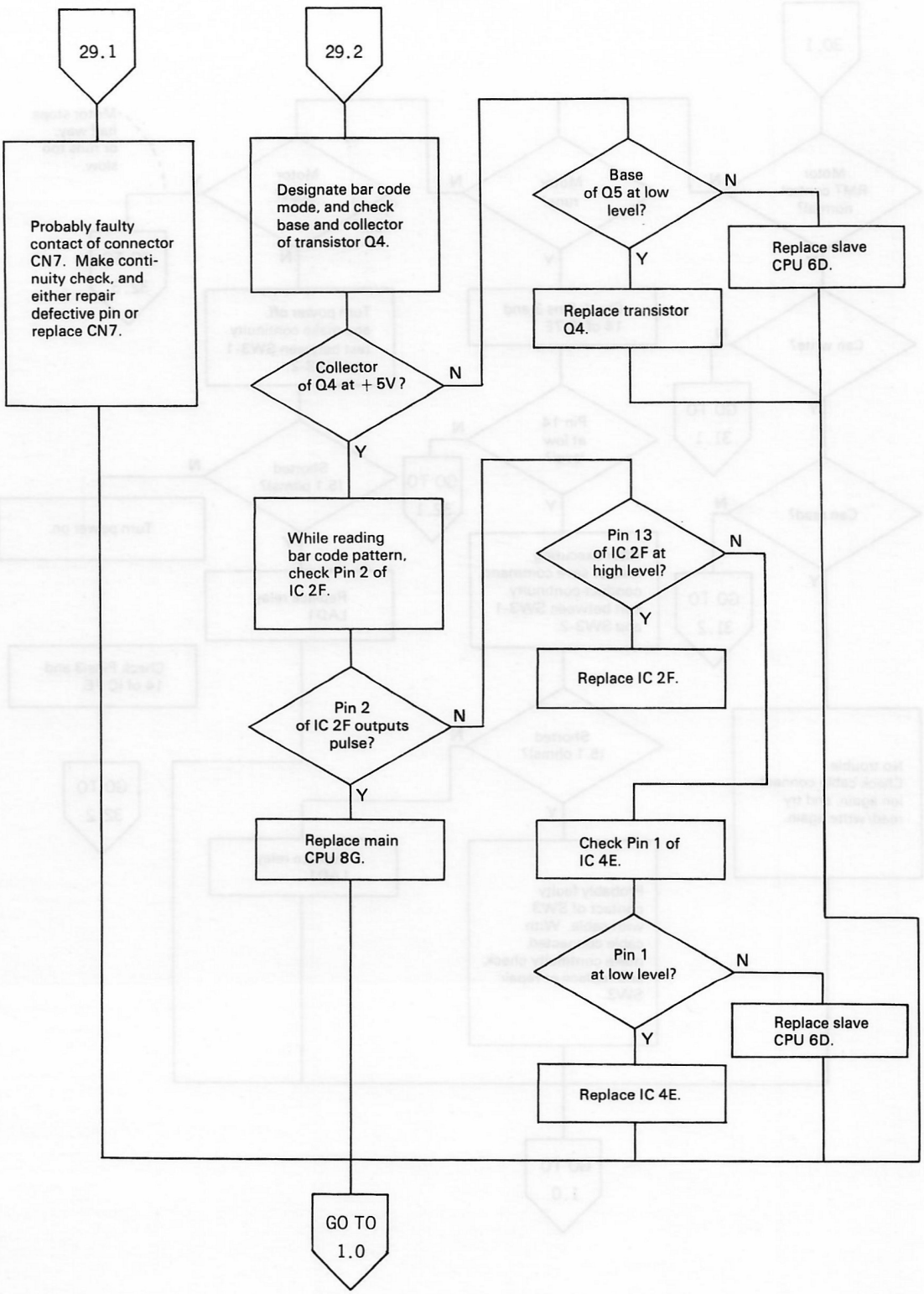
29.1
29.2
Probably faulty contact of connector CN7. Make continuity check, and either repair defective pin or replace CN7.
Designate bar code mode, and check base and collector of transistor Q4.
Collector of Q4 at + 5V ?
N
Y
Base of Q5 at low level?
N
Y
Replace slave CPU 6D.
Replace transistor Q4.
While reading bar code pattern, check Pin 2 of IC 2F.
Pin 2 of IC 2F outputs pulse?
N
Y
Pin 13 of IC 2F at high level?
N
Y
Replace IC 2F.
Replace main CPU 8G.
Check Pin 1 of IC 4E.
Pin 1 at low level?
N
Y
Replace slave CPU 6D.
Replace IC 4E.
GO TO 1.0

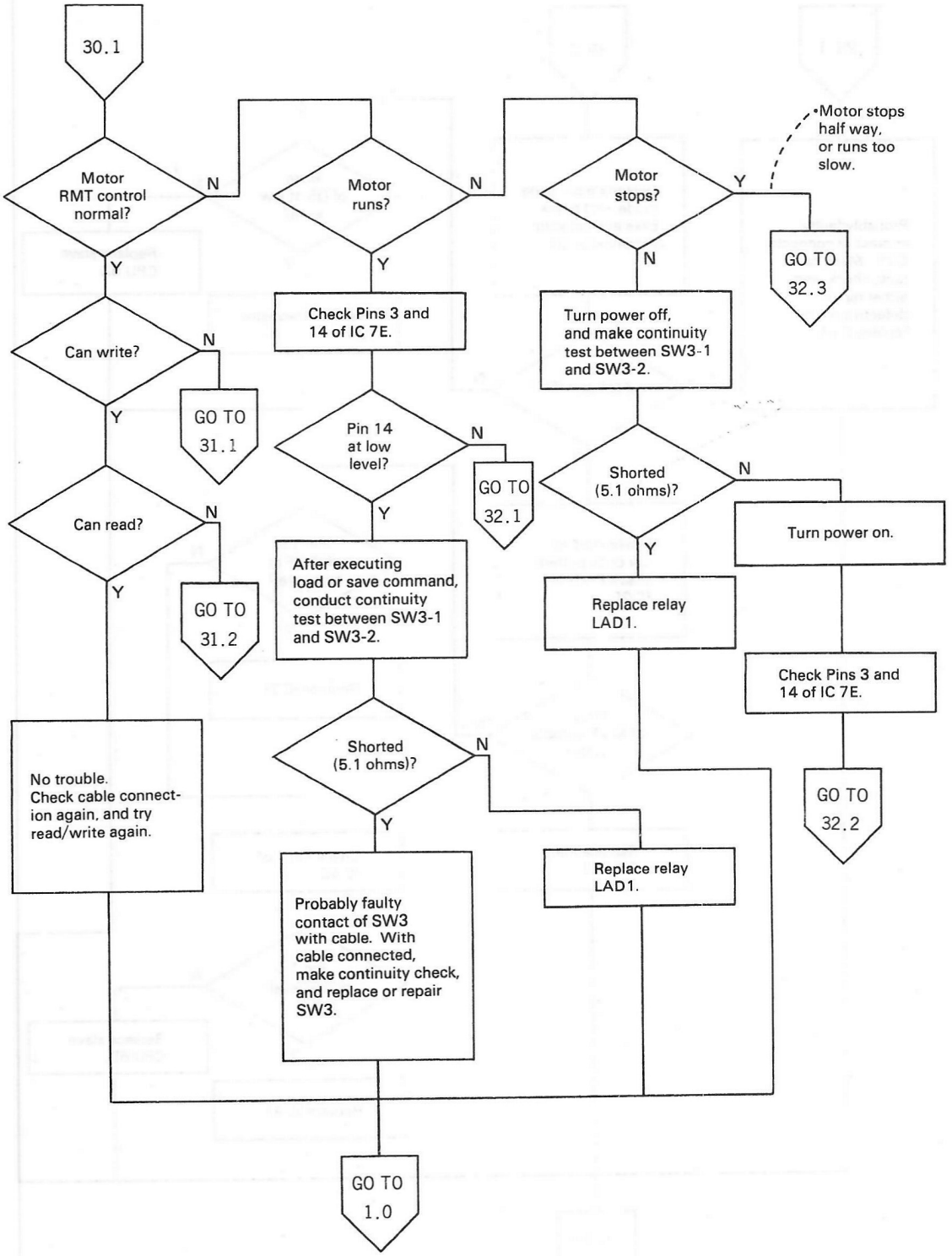
30.1
Motor RMT control normal?
N
Y
Motor runs?
N
Y
Motor stops?
Y
N
•Motor stops half way, or runs too slow.
GO TO 32.3
Can write?
N
Y
GO TO 31.1
Check Pins 3 and 14 of IC 7E.
Turn power off, and make continuity test between SW3-1 and SW3-2.
Pin 14 at low level?
N
Y
GO TO 32.1
Shorted (5.1 ohms)?
N
Y
Turn power on.
Can read?
N
Y
GO TO 31.2
After executing load or save command, conduct continuity test between SW3-1 and SW3-2.
Replace relay LAD1.
Check Pins 3 and 14 of IC 7E.
Shorted (5.1 ohms)?
N
Y
GO TO 32.2
No trouble. Check cable connect-ion again, and try read/write again.
Probably faulty contact of SW3 with cable. With cable connected, make continuity check, and replace or repair SW3.
Replace relay LAD1.
GO TO 1.0

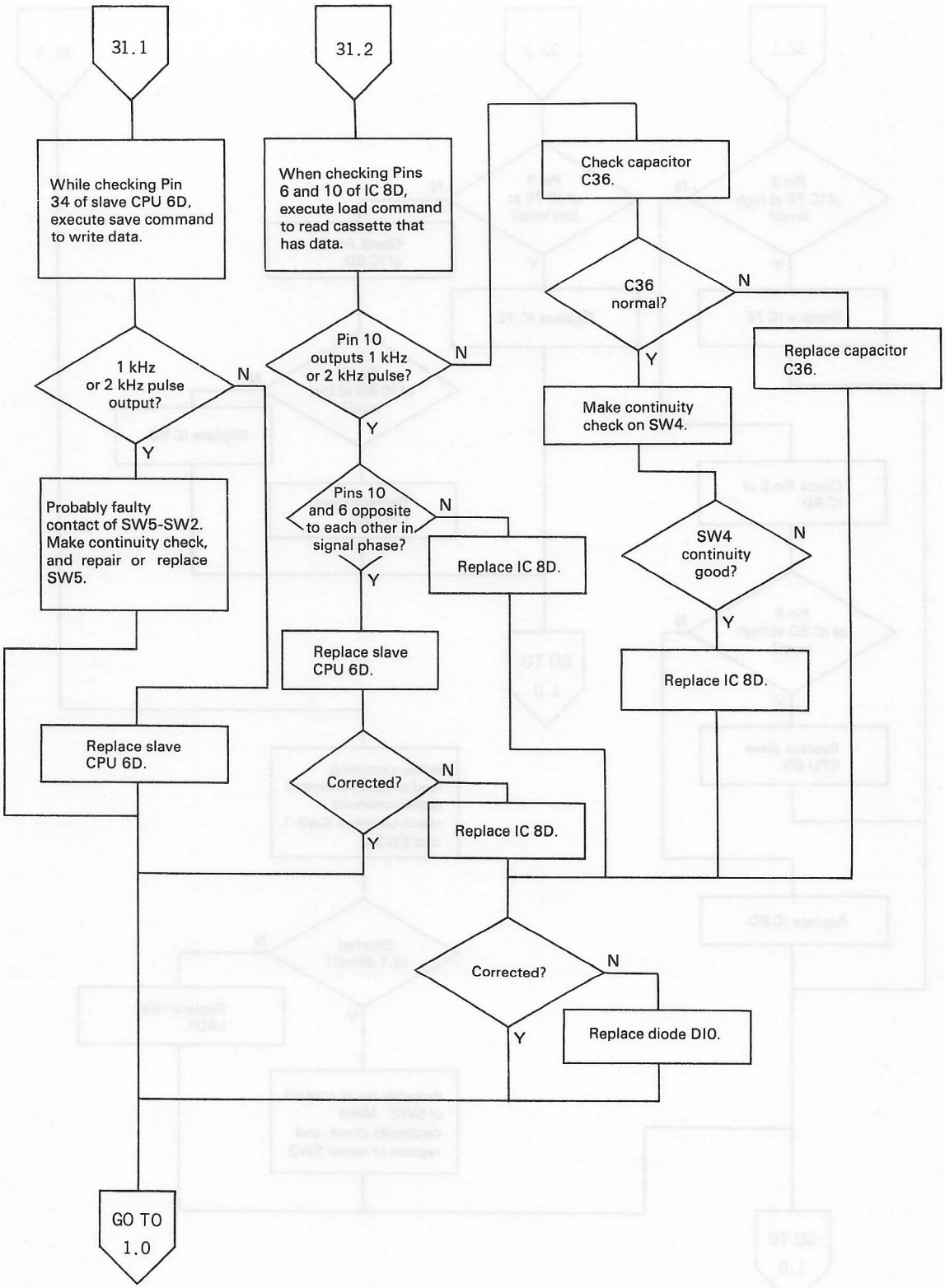
31.1
31.2
While checking Pin 34 of slave CPU 6D, execute save command to write data.
When checking Pins 6 and 10 of IC 8D, execute load command to read cassette that has data.
Check capacitor C36.
C36 normal?
N
Y
Replace capacitor C36.
Make continuity check on SW4.
1 kHz or 2 kHz pulse output?
N
Y
Pin 10 outputs 1 kHz or 2 kHz pulse?
N
Y
Probably faulty contact of SW5-SW2. Make continuity check, and repair or replace SW5.
Pins 10 and 6 opposite to each other in signal phase?
N
Y
Replace IC 8D.
SW4 continuity good?
N
Y
Replace IC 8D.
Replace slave CPU 6D.
Replace slave CPU 6D.
Corrected?
N
Y
Replace IC 8D.
Corrected?
N
Y
Replace diode D10.
GO TO 1.0

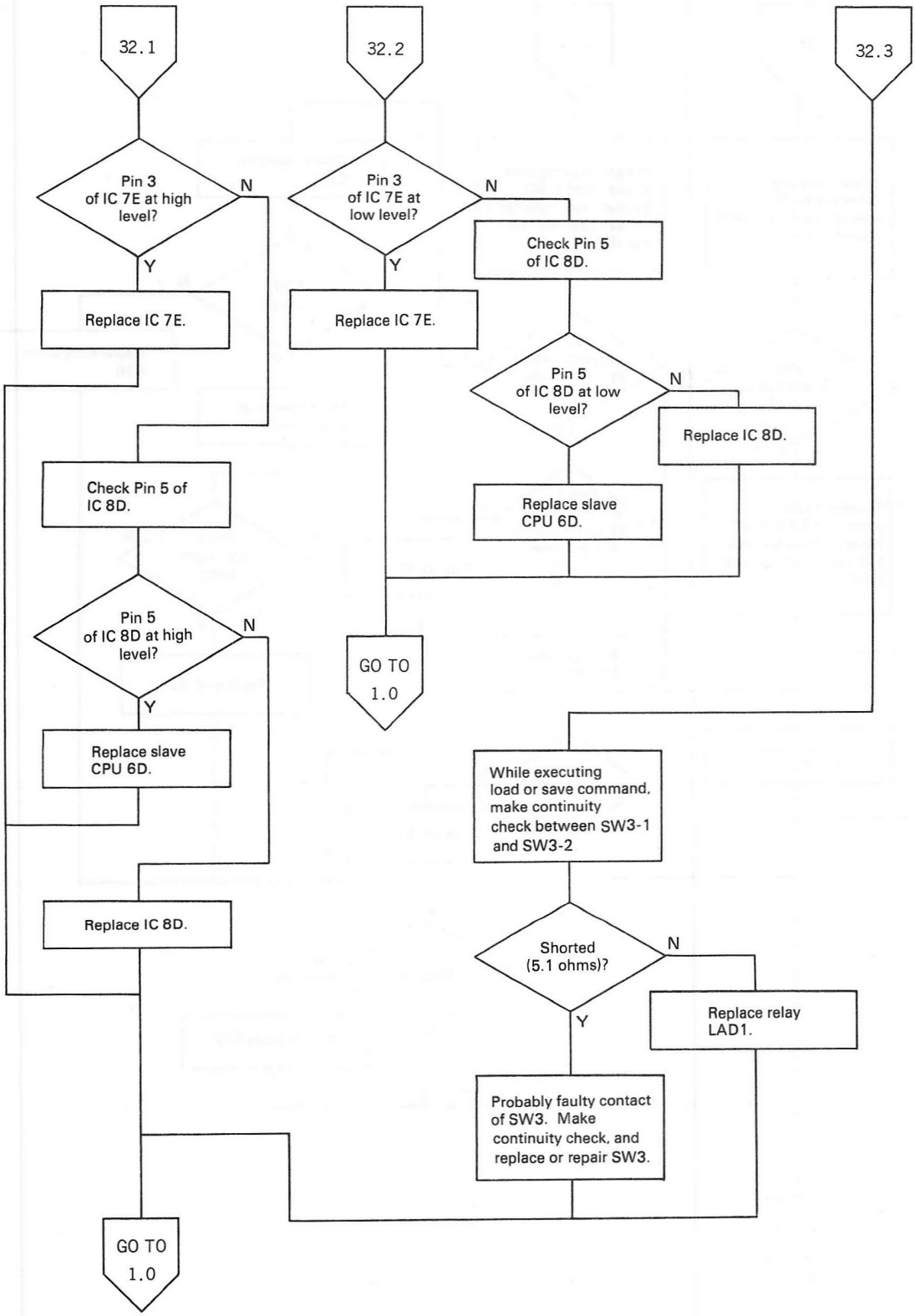
32.1
Pin 3 of IC 7E at high level?
N
Y
Replace IC 7E.
Check Pin 5 of IC 8D.
Pin 5 of IC 8D at high level?
N
Y
Replace slave CPU 6D.
Replace IC 8D.
GO TO 1.0
32.2
Pin 3 of IC 7E at low level?
N
Y
Replace IC 7E.
Check Pin 5 of IC 8D.
Pin 5 of IC 8D at low level?
N
Replace IC 8D.
Replace slave CPU 6D.
GO TO 1.0
32.3
While executing load or save command, make continuity check between SW3-1 and SW3-2
Shorted (5.1 ohms)?
N
Y
Replace relay LAD1.
Probably faulty contact of SW3. Make continuity check, and replace or repair SW3.

8.3.2 Keyboard

Confirm the following before repairing the keyboard.

(1) Keyboard free of deformation and circuit board cracking
(2) Keyboard cable connections free of damage
(3) Keyboard free of waterdrops inside (circuit board, FPC, patterns, switches, etc.)
(4) FPC pattern not peeled from the circuit board

If the keyboard is found defective concerning Item (1) or (2) above, replace the keyboard unit with a new one because it cannot be repaired.

If waterdrops are found as mentioned in Item (3), wipe them off, and let the keyboard dry naturally at normal temperature. Recheck the keyboard function after it is dry, and if the trouble persists, replace the keyboard unit. (It is recommended that the unit be replaced with a new one because the trouble can recur due to oxidation of the patterns even if it is remedied once.)

If the trouble mentioned in Item (4) developed, fastened the peeled part with a tape or adhesive on the outside. If it cannot be repaired by this method, replace the keyboard unit with a new one.

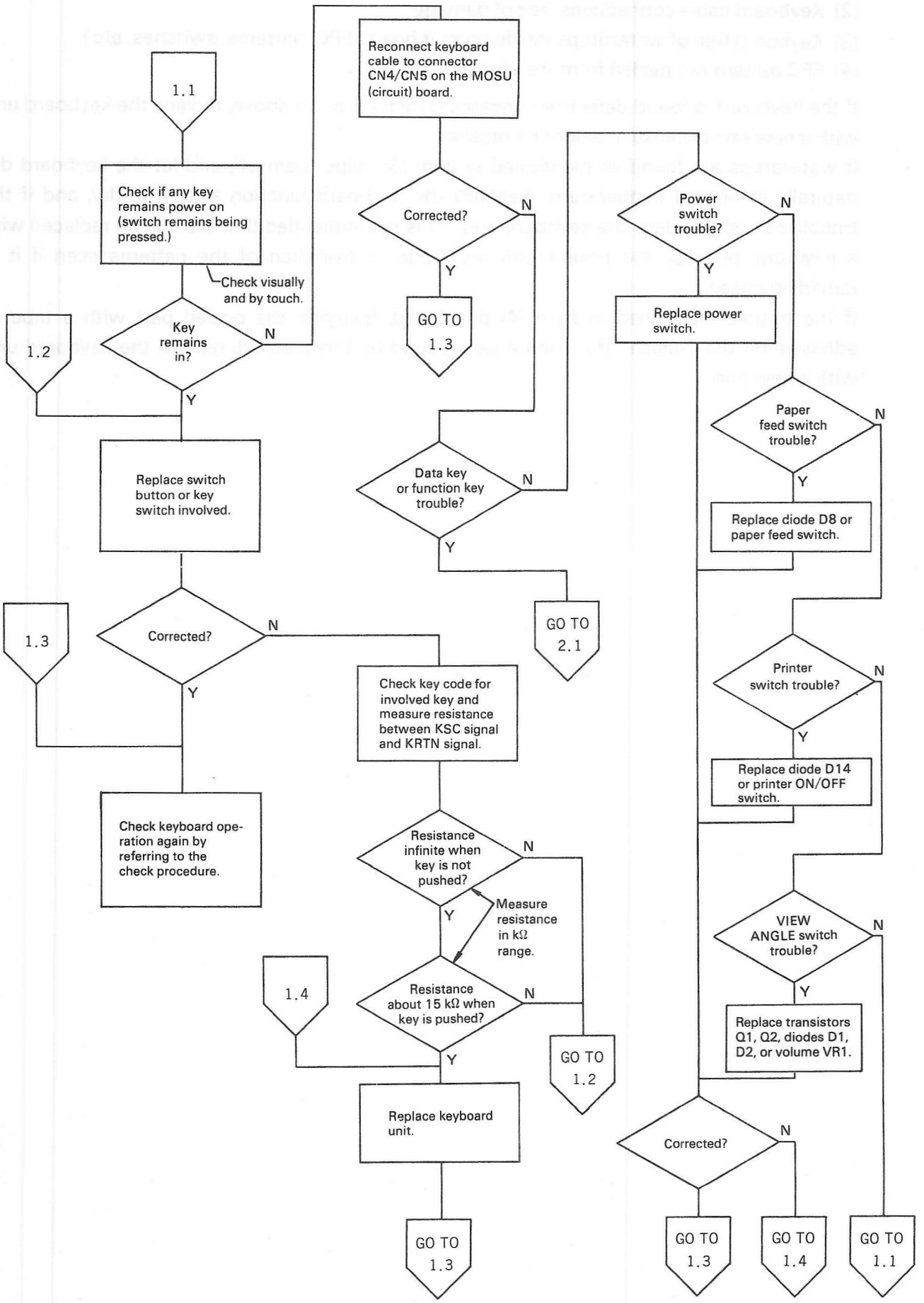
1.1
Check if any key remains power on (switch remains being pressed.)
Check visually and by touch.
1.2
Key remains in?
N
Y
Replace switch button or key switch involved.
1.3
Corrected?
N
Y
Check keyboard operation again by referring to the check procedure.
Reconnect keyboard cable to connector CN4/CN5 on the MOSU (circuit) board.
Corrected?
N
Y
GO TO 1.3
Data key or function key trouble?
N
Y
GO TO 2.1
Check key code for involved key and measure resistance between KSC signal and KRTN signal.
Resistance infinite when key is not pushed?
N
Y
Measure resistance in kΩ range.
1.4
Resistance about 15 kΩ when key is pushed?
N
Y
GO TO 1.2
Replace keyboard unit.
GO TO 1.3
Power switch trouble?
N
Y
Replace power switch.
Paper feed switch trouble?
N
Y
Replace diode D8 or paper feed switch.
Printer switch trouble?
N
Y
Replace diode D14 or printer ON/OFF switch.
VIEW ANGLE switch trouble?
N
Y
Replace transistors Q1, Q2, diodes D1, D2, or volume VR1.
Corrected?
N
GO TO 1.3
GO TO 1.4
GO TO 1.1

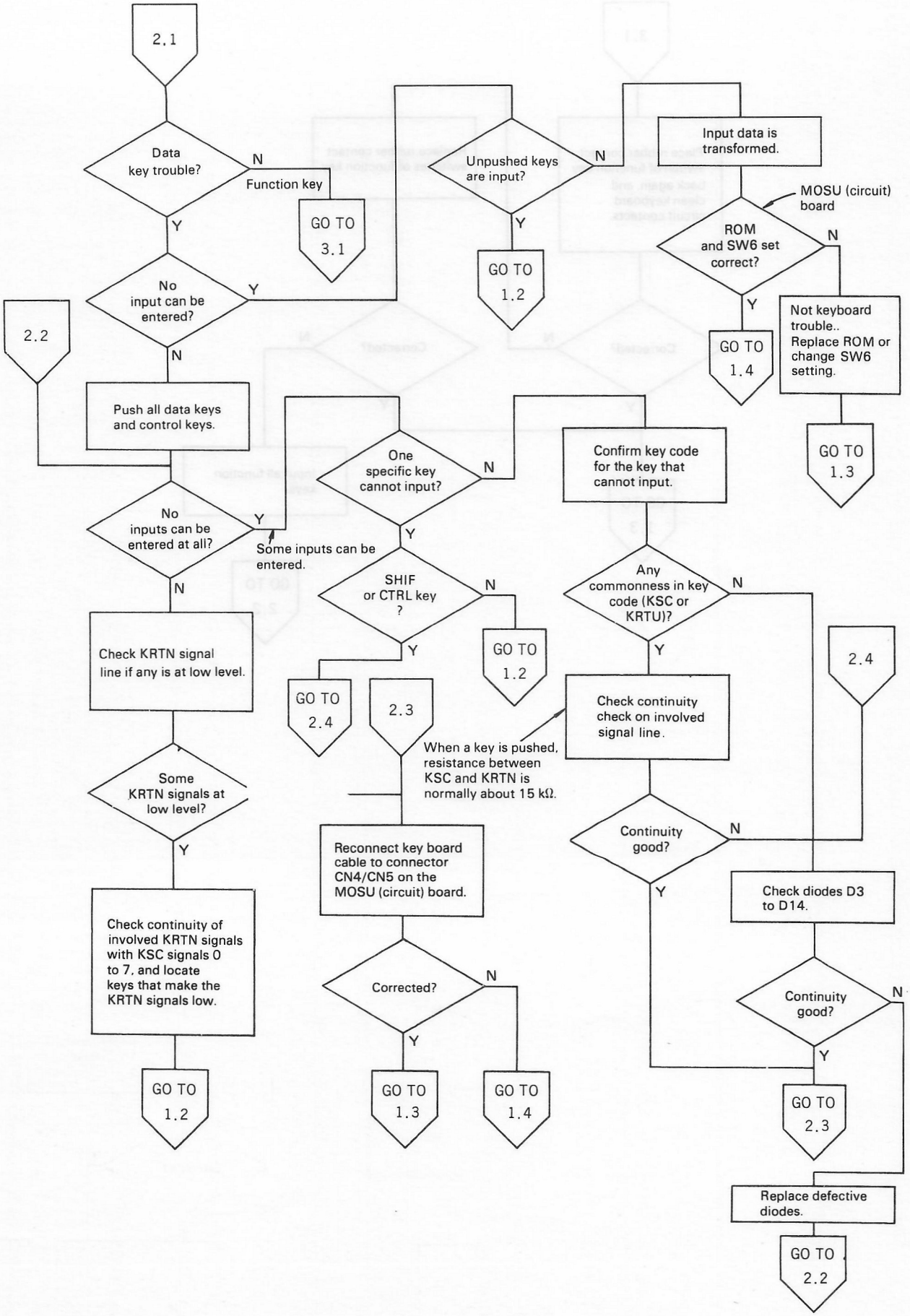
2.1
Data key trouble?
N
Function key
GO TO 3.1
Y
No input can be entered?
Y
N
2.2
Push all data keys and control keys.
No inputs can be entered at all?
Y
Some inputs can be entered.
N
Check KRTN signal line if any is at low level.
Some KRTN signals at low level?
Y
Check continuity of involved KRTN signals with KSC signals 0 to 7, and locate keys that make the KRTN signals low.
GO TO 1.2
Unpushed keys are input?
N
Y
GO TO 1.2
One specific key cannot input?
N
Y
SHIF or CTRL key ?
N
GO TO 1.2
Y
GO TO 2.4
2.3
When a key is pushed, resistance between KSC and KRTN is normally about 15 kΩ.
Reconnect key board cable to connector CN4/CN5 on the MOSU (circuit) board.
Corrected?
N
Y
GO TO 1.3
GO TO 1.4
Input data is transformed.
MOSU (circuit) board
ROM and SW6 set correct?
N
Y
GO TO 1.4
Not keyboard trouble.. Replace ROM or change SW6 setting.
GO TO 1.3
Confirm key code for the key that cannot input.
Any commonness in key code (KSC or KRTU)?
N
Y
Check continuity check on involved signal line.
Continuity good?
N
Y
2.4
Check diodes D3 to D14.
Continuity good?
N
Y
GO TO 2.3
Replace defective diodes.
GO TO 2.2

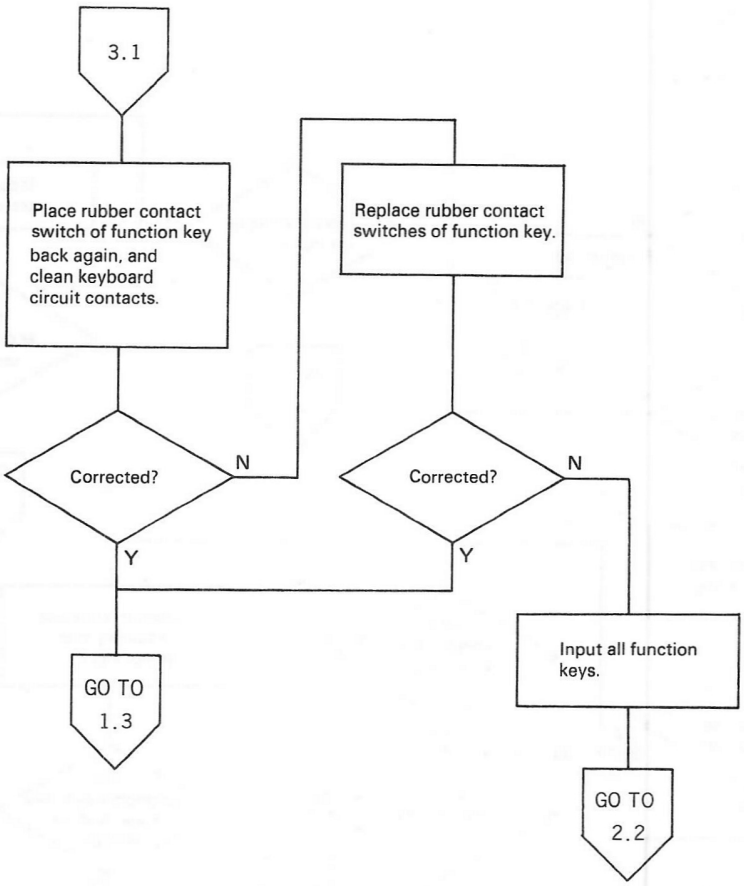
3.1
Place rubber contact switch of function key back again, and clean keyboard circuit contacts.
Replace rubber contact switches of function key.
Corrected?
N
Y
Corrected?
N
Y
GO TO 1.3
Input all function keys.
GO TO 2.2

8.3.3 LCD

Confirm the following when repairing the LCD.

(1) LCD panel surface free of damage
(2) No partial shade on the panel when power is off
(3) LCD (circuit) board free of damage

If any trouble is detected concerning Item (1), (2) and (3) above, replace the LCD unit with a new one because it cannot be repaired.

* When replacing an IC (μPd 7227) in the LCD unit, follow the procedure below.

(1) Remove the solder from each IC lead with a solder wick.
(2) Slightly push the IC up with a precision screwdriver or the like. (Do not forcibly raise the IC. Otherwise, the pattern peels, making the LCD unit irreparable.)
(3) Remove the IC, and completely remove the solder from the pattern with a solder wick.
(4) Reform the leads of a new IC. (Remember that the ICs on the front and back of the circuit board have their leads bent in the opposite direction. Parts number also different.
(5) Solder the new IC.
(6) Remove the flux from the soldered part.

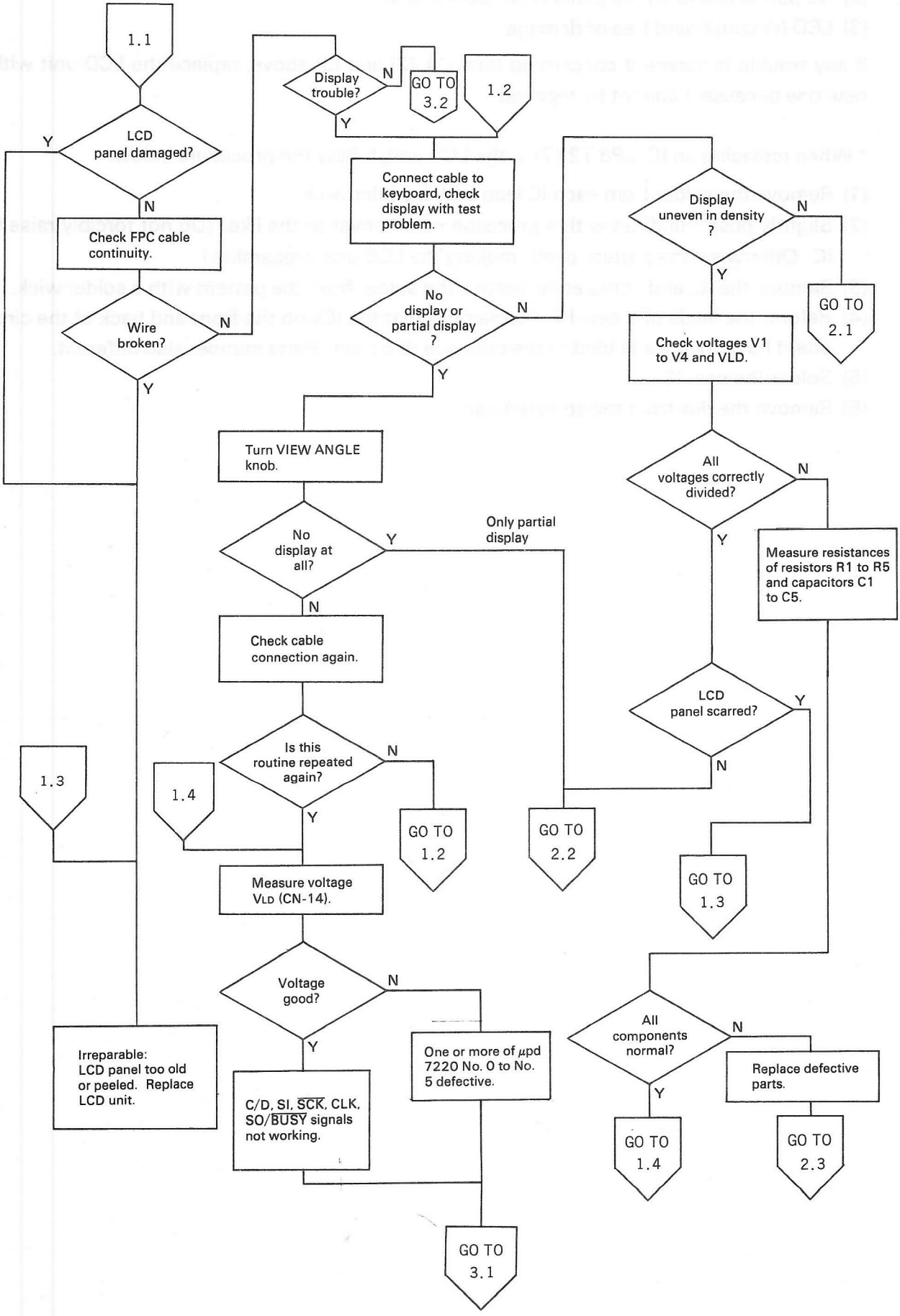
1.1
LCD panel damaged?
Y
N
Check FPC cable continuity.
Wire broken?
N
Y
Display trouble?
N
GO TO 3.2
1.2
Y
Connect cable to keyboard, check display with test problem.
No display or partial display ?
N
Y
Turn VIEW ANGLE knob.
No display at all?
Y
Only partial display
N
Check cable connection again.
Is this routine repeated again?
N
Y
1.4
GO TO 1.2
1.3
Measure voltage VLD (CN-14).
Voltage good?
N
Y
Irreparable: LCD panel too old or peeled. Replace LCD unit.
C/D, SI, SCK, CLK, SO/BUSY signals not working.
One or more of μpd 7220 No. 0 to No. 5 defective.
GO TO 3.1
Display uneven in density ?
N
Y
GO TO 2.1
Check voltages V1 to V4 and VLD.
All voltages correctly divided?
N
Y
Measure resistances of resistors R1 to R5 and capacitors C1 to C5.
LCD panel scarred?
Y
N
GO TO 2.2
GO TO 1.3
All components normal?
N
Y
Replace defective parts.
GO TO 1.4
GO TO 2.3

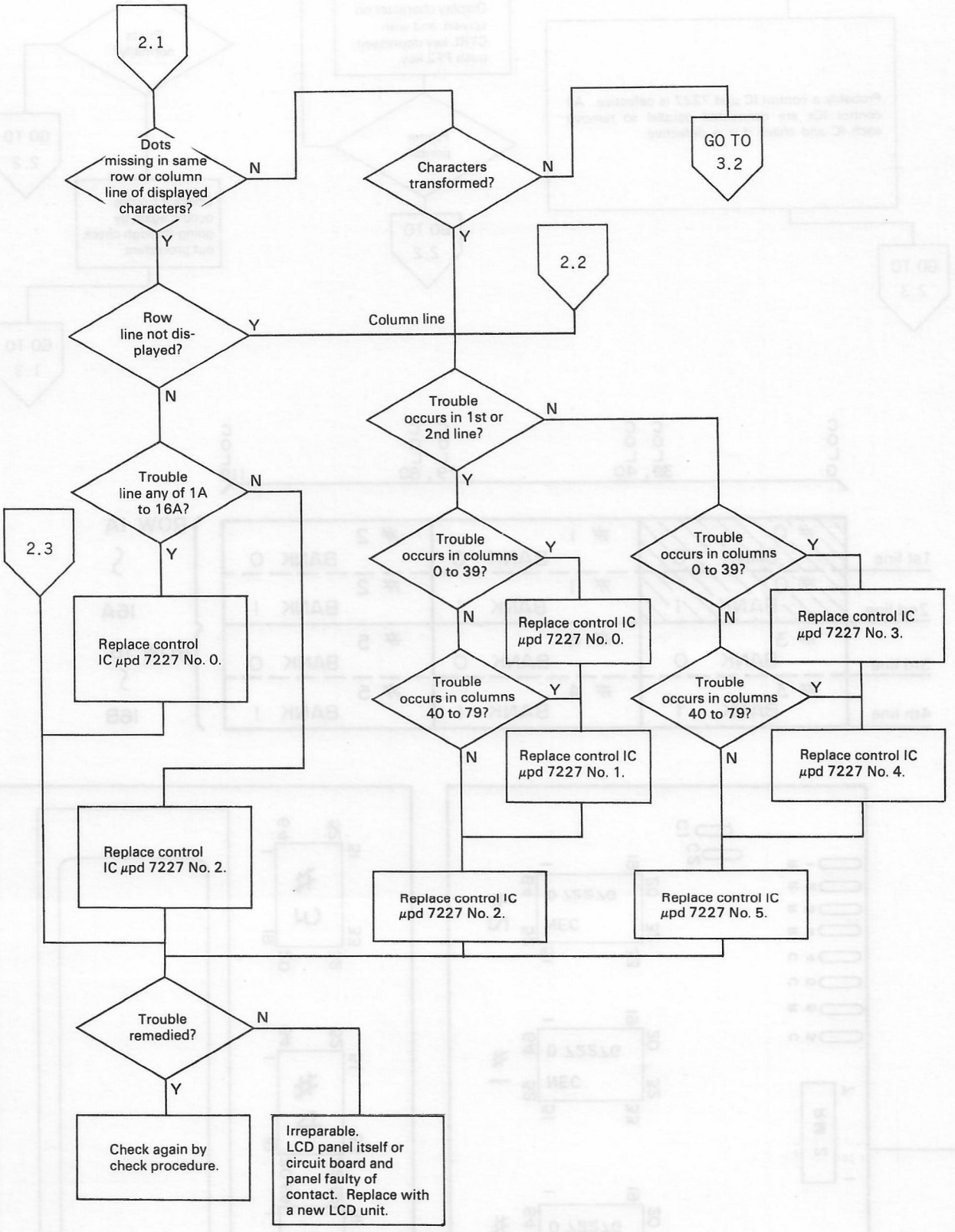
2.1
Dots missing in same row or column line of displayed characters?
N
Y
Characters transformed?
N
Y
GO TO 3.2
2.2
Row line not displayed?
Y
Column line
N
Trouble occurs in 1st or 2nd line?
N
Y
Trouble line any of 1A to 16A?
N
Y
2.3
Replace control IC μpd 7227 No. 0.
Trouble occurs in columns 0 to 39?
Y
N
Replace control IC μpd 7227 No. 0.
Trouble occurs in columns 40 to 79?
Y
N
Replace control IC μpd 7227 No. 1.
Replace control IC μpd 7227 No. 2.
Trouble occurs in columns 0 to 39?
Y
N
Replace control IC μpd 7227 No. 3.
Trouble occurs in columns 40 to 79?
Y
N
Replace control IC μpd 7227 No. 4.
Replace control IC μpd 7227 No. 5.
Replace control IC μpd 7227 No. 2.
Trouble remedied?
N
Y
Check again by check procedure.
Irreparable. LCD panel itself or circuit board and panel faulty of contact. Replace with a new LCD unit.

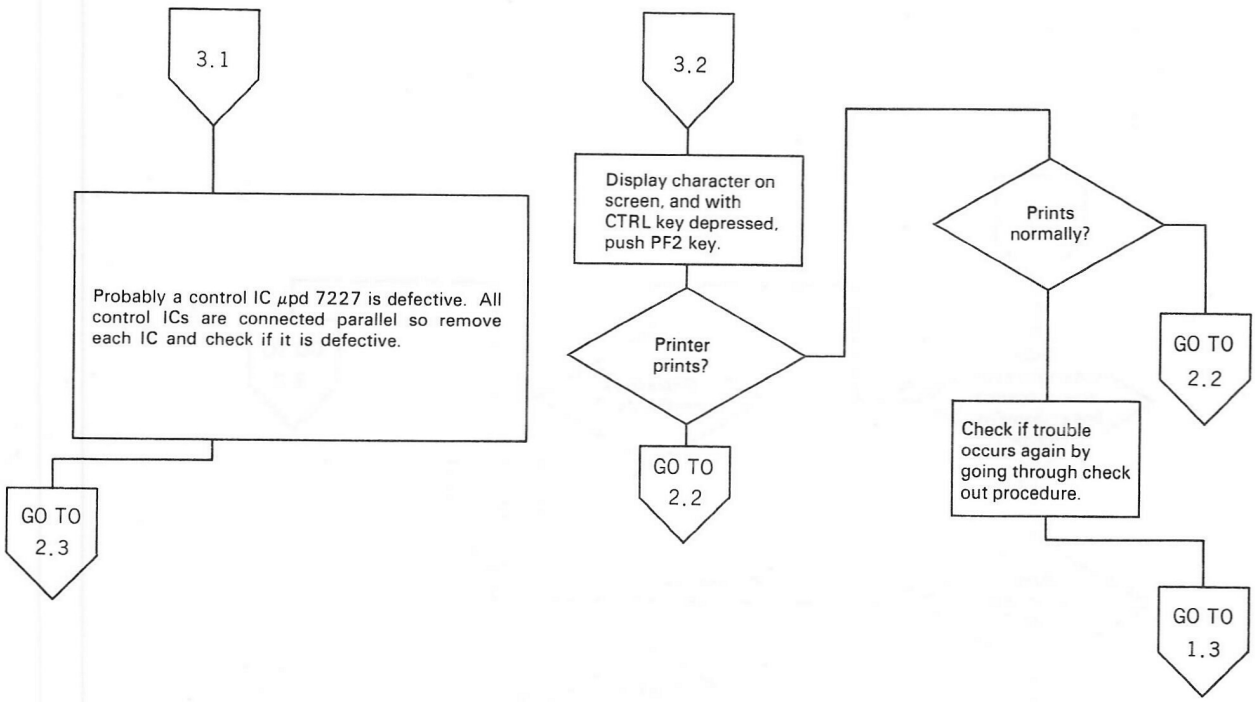
3.1
Probably a control IC μpd 7227 is defective. All control ICs are connected parallel so remove each IC and check if it is defective.
GO TO 2.3
3.2
Display character on screen, and with CTRL key depressed, push PF2 key.
Printer prints?
GO TO 2.2
Prints normally?
GO TO 2.2
Check if trouble occurs again by going through check out procedure.
GO TO 1.3

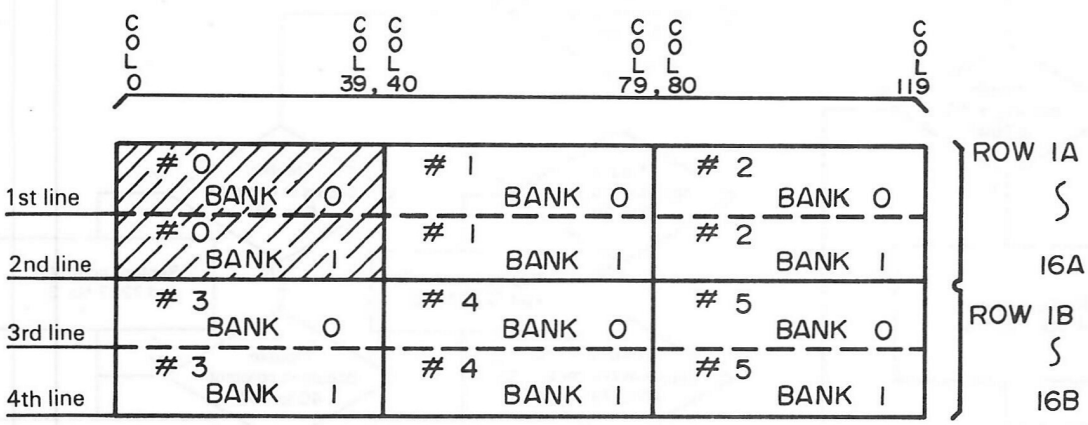
COL 0
COL 39, 40
COL 79, 80
COL 119
1st line
2nd line
3rd line
4th line
0 BANK 0
1 BANK 0
2 BANK 0
0 BANK 1
1 BANK 1
2 BANK 1
3 BANK 0
4 BANK 0
5 BANK 0
3 BANK 1
4 BANK 1
5 BANK 1
ROW 1A
16A
ROW 1B
16B

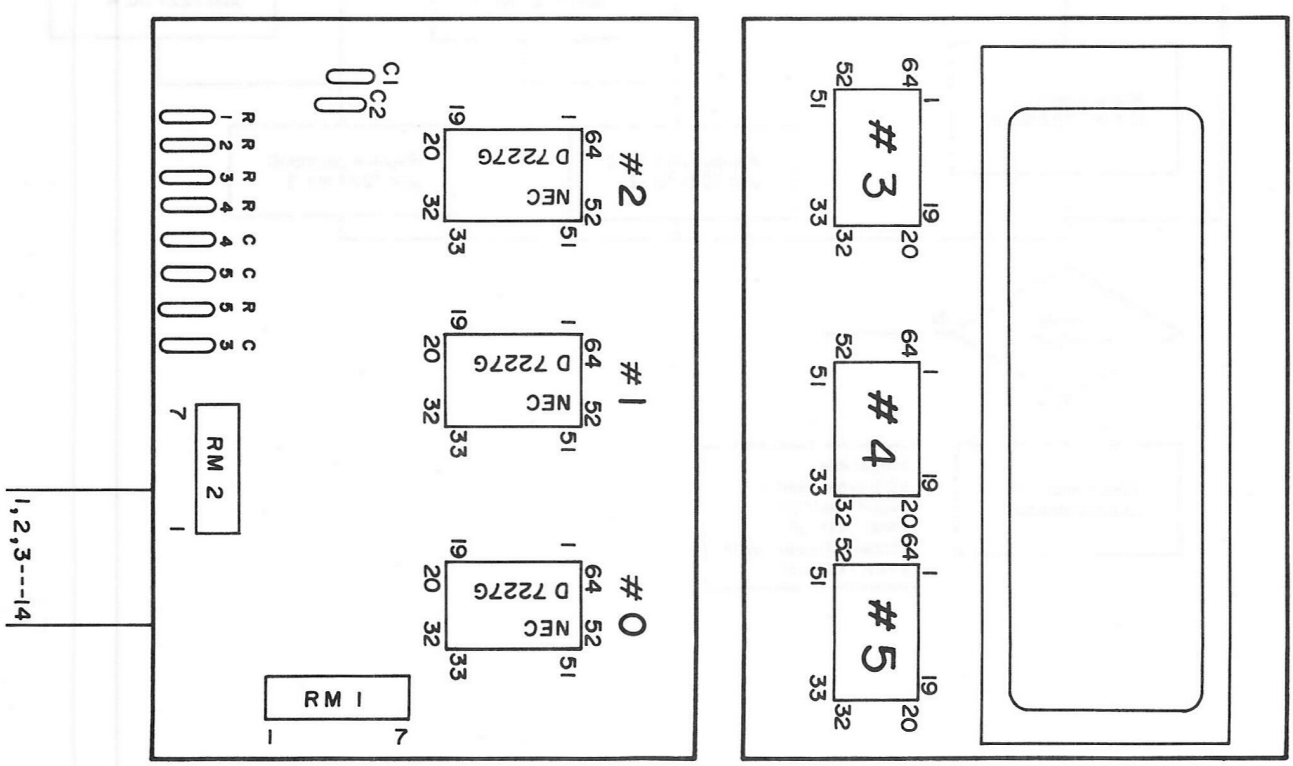
C1
C2
R1 R2 R3 R4 C5 C6 C7 C8
RM 2
RM 1
1,2,3---14
#2
#1
#0
NEC D 7227G
#3
#4
#5

8.3.4 Micro Printer (Model-160)

Observe the following precautions when repairing the printer.

(1) Carefully read the description of the principles and construction of the printer before attempting repairs. Be especially attentive to the mounting positions and installing procedure.

(2) Be careful not to lose the retaining rings TYPE-E. Use the ET holder when installing the printer.

(3) If any part is touched by fingers, wipe off the fingerprints with alcohol or the like after repairs. Oil if necessary.

(4) Do not strain the parts when removing or installing them.

(5) When connecting the FPC cable, do not keep the soldering too long on it.

Table 16.

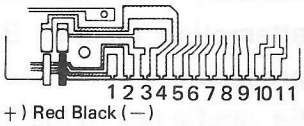
1 2 3 4 5 6 7 8 9 10 11
(+) Red Black (−)
(Motor)

1.1
Motor runs?
N
Y
Turn power off, and measure motor coil resistance. (Between terminals 3 and 4 in Table 16)
Shorted or broken
Replace motor.
Coil resistance about 80Ω?
N
Y
Head carriage moves to right and left?
N
Y
Check head cam if it can be lightly turned by finger.
Check timing detector if it is properly mounted; check inside printer for any foreign matter. If nothing is found wrong with neither of them, replace reduction unit.
Cam rotates smoothly?
N
Y
Replace FPC cable to MOSU (circuit) board.
Prints?
N
Y
Head cam unit rotates?
N
Y
Replace reduction unit.
Replace head carriage assembly.
GO TO 2.1
GO TO 5.1
GO TO 1.1

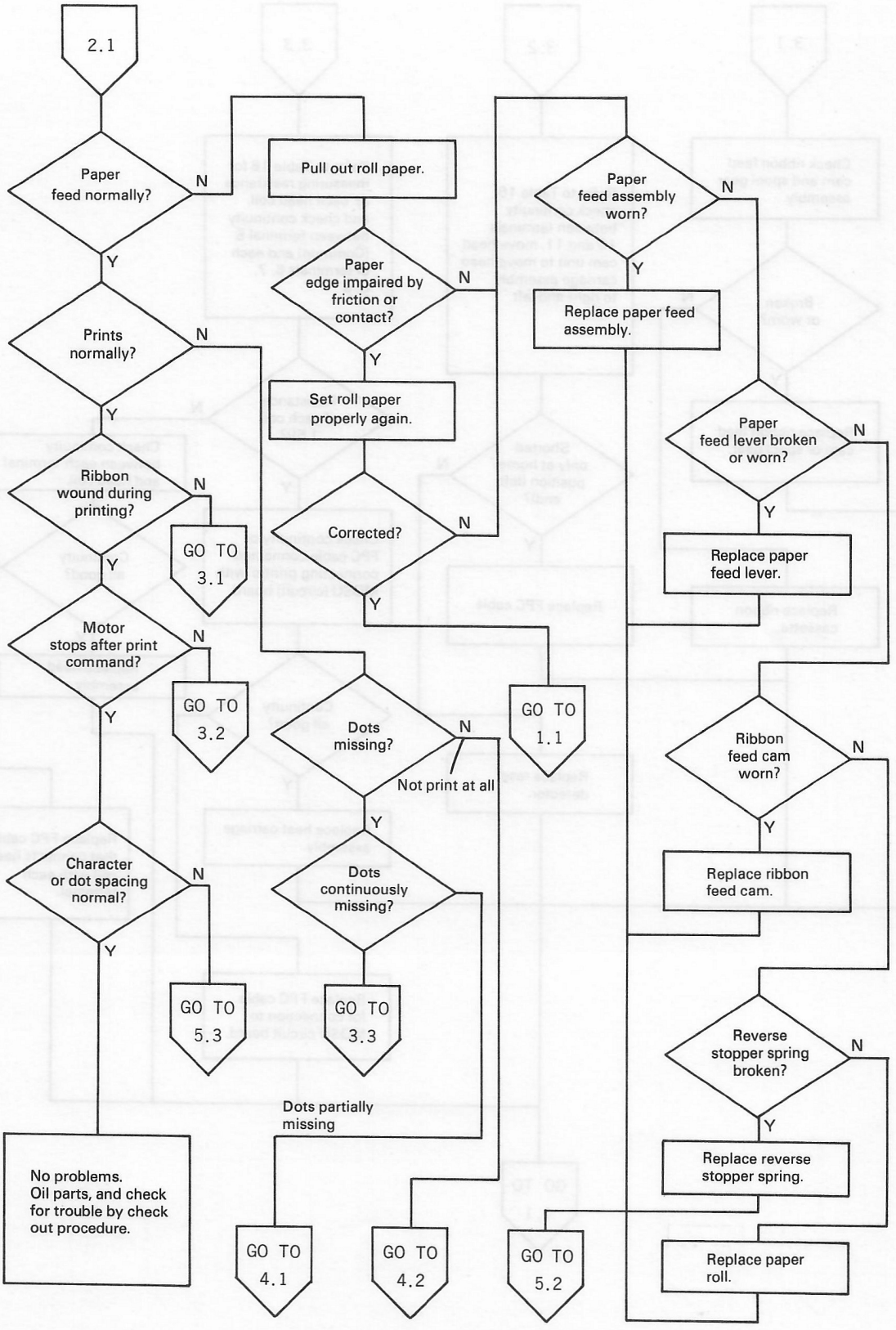
2.1
Paper feed normally?
N
Pull out roll paper.
Y
Paper edge impaired by friction or contact?
N
Y
Set roll paper properly again.
Corrected?
N
Y
Prints normally?
N
Y
Ribbon wound during printing?
N
GO TO 3.1
Y
Motor stops after print command?
N
GO TO 3.2
Y
Dots missing?
N
Not print at all
GO TO 1.1
Y
Character or dot spacing normal?
N
GO TO 5.3
Y
Dots continuously missing?
GO TO 3.3
Dots partially missing
No problems.
Oil parts, and check for trouble by check out procedure.
GO TO 4.1
GO TO 4.2
Paper feed assembly worn?
N
Y
Replace paper feed assembly.
GO TO 5.2
Paper feed lever broken or worn?
N
Y
Replace paper feed lever.
Ribbon feed cam worn?
N
Y
Replace ribbon feed cam.
Reverse stopper spring broken?
N
Y
Replace reverse stopper spring.
Replace paper roll.

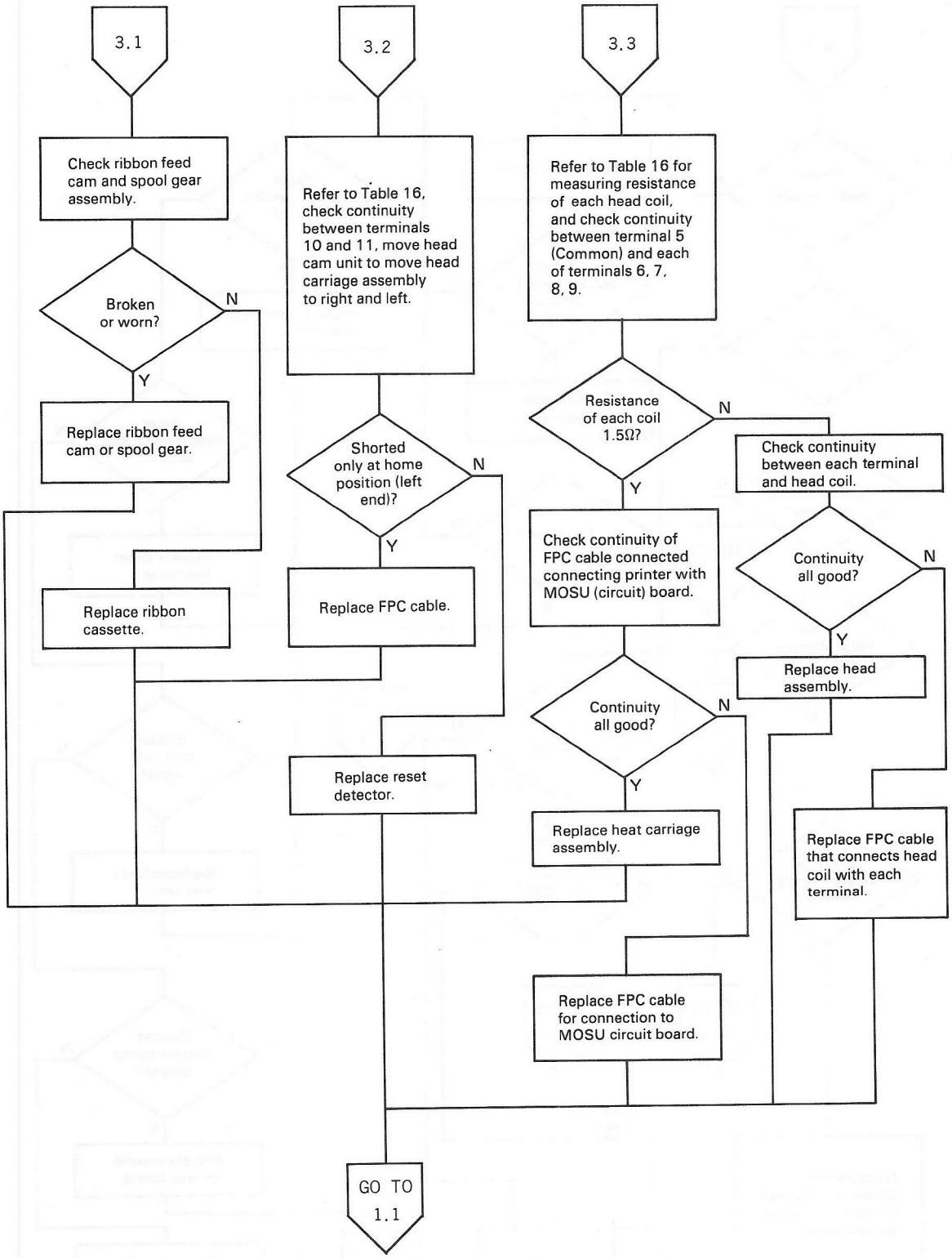
3.1
Check ribbon feed cam and spool gear assembly.
Broken or worn?
N
Y
Replace ribbon feed cam or spool gear.
Replace ribbon cassette.
3.2
Refer to Table 16, check continuity between terminals 10 and 11, move head cam unit to move head carriage assembly to right and left.
Shorted only at home position (left end)?
N
Y
Replace FPC cable.
Replace reset detector.
3.3
Refer to Table 16 for measuring resistance of each head coil, and check continuity between terminal 5 (Common) and each of terminals 6, 7, 8, 9.
Resistance of each coil 1.5Ω?
N
Y
Check continuity between each terminal and head coil.
Continuity all good?
N
Y
Replace head assembly.
Replace FPC cable that connects head coil with each terminal.
Check continuity of FPC cable connected connecting printer with MOSU (circuit) board.
Continuity all good?
N
Y
Replace heat carriage assembly.
Replace FPC cable for connection to MOSU circuit board.
GO TO 1.1

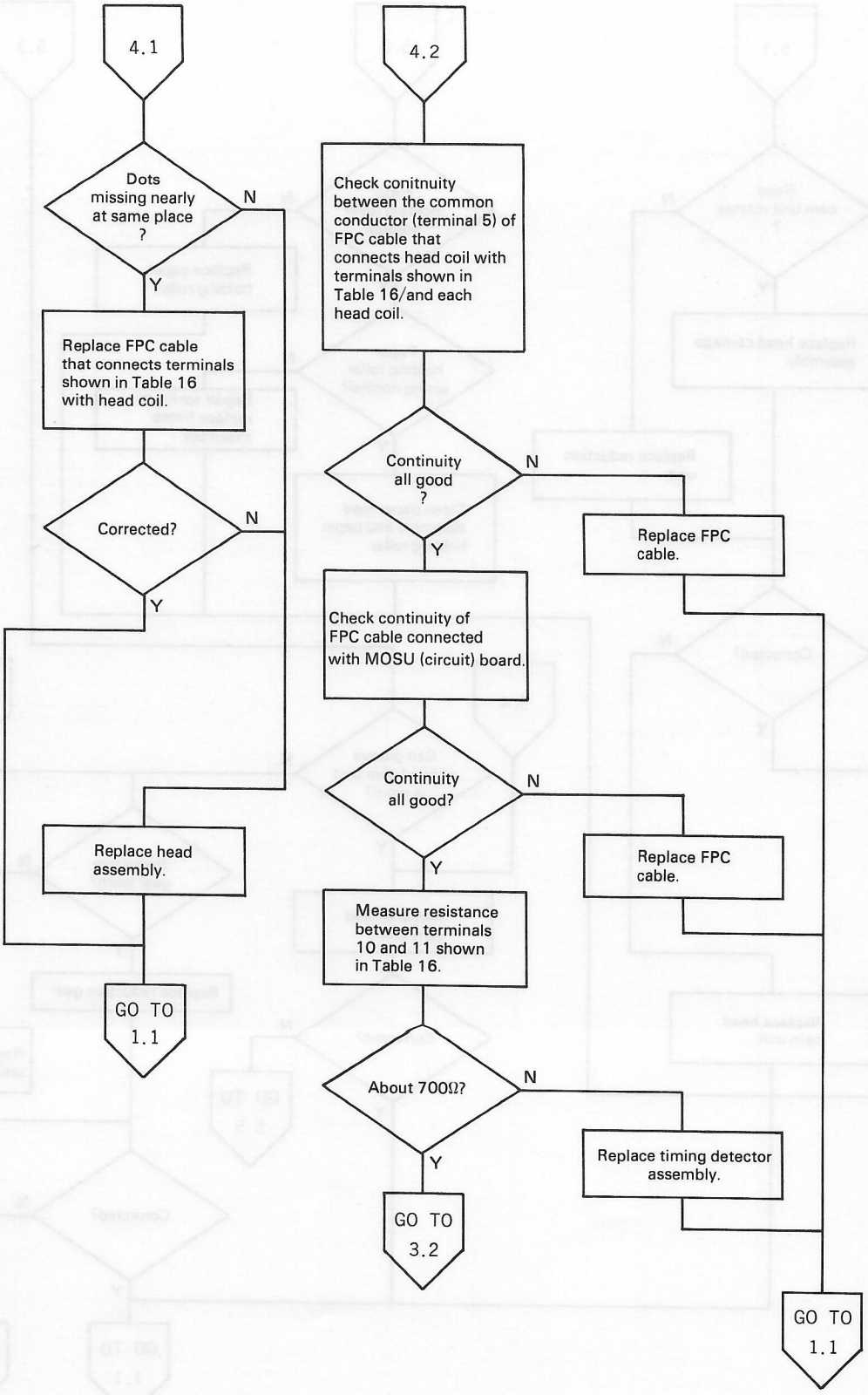
4.1
Dots missing nearly at same place ?
N
Y
Replace FPC cable that connects terminals shown in Table 16 with head coil.
Corrected?
N
Y
Replace head assembly.
GO TO 1.1
4.2
Check conitnuity between the common conductor (terminal 5) of FPC cable that connects head coil with terminals shown in Table 16/and each head coil.
Continuity all good ?
N
Y
Replace FPC cable.
Check continuity of FPC cable connected with MOSU (circuit) board.
Continuity all good?
N
Y
Replace FPC cable.
Measure resistance between terminals 10 and 11 shown in Table 16.
About 700Ω?
N
Y
Replace timing detector assembly.
GO TO 3.2
GO TO 1.1

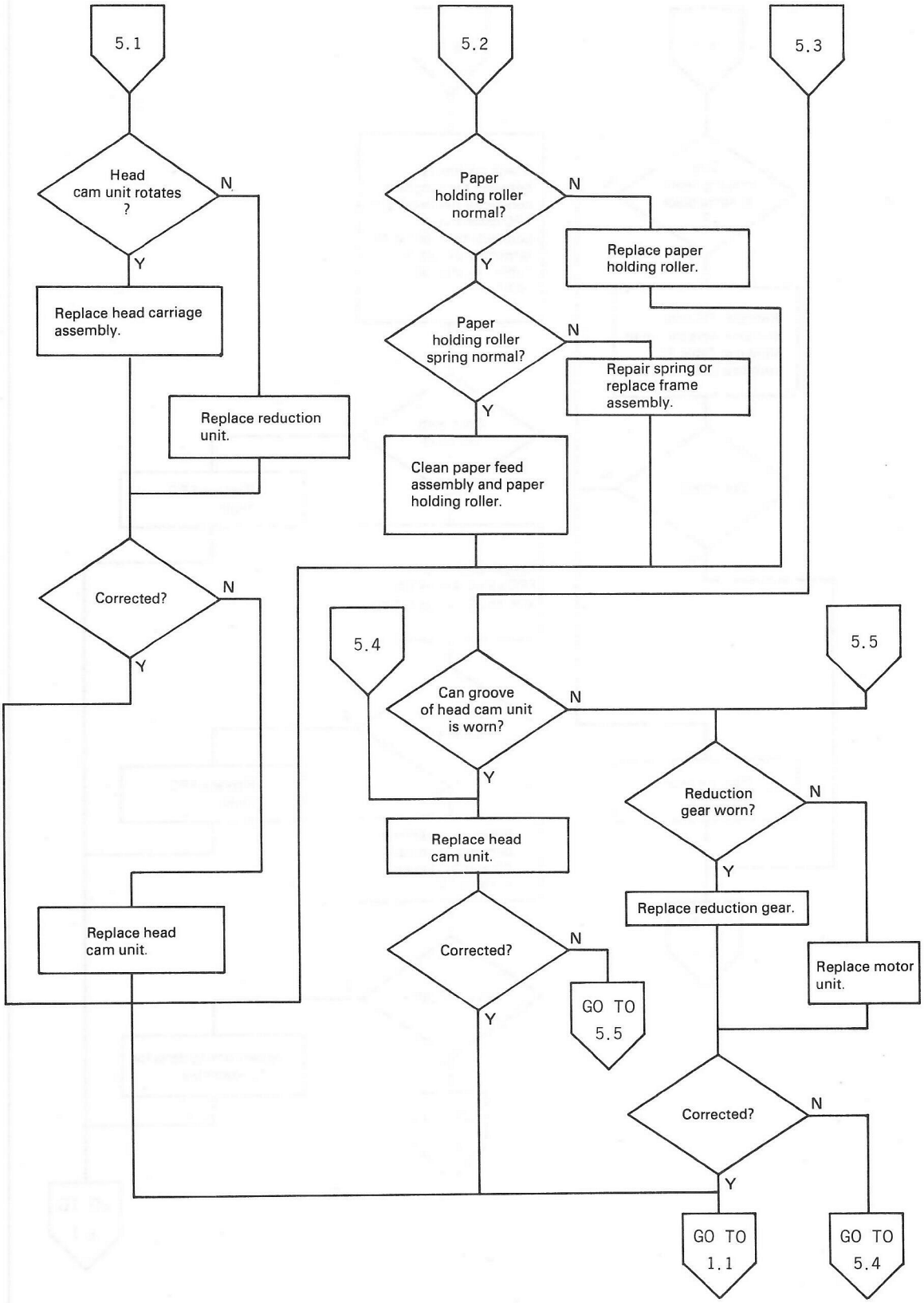
5.1
Head cam unit rotates ?
N
Y
Replace head carriage assembly.
Replace reduction unit.
Corrected?
N
Y
Replace head cam unit.
5.2
Paper holding roller normal?
N
Y
Replace paper holding roller.
Paper holding roller spring normal?
N
Y
Repair spring or replace frame assembly.
Clean paper feed assembly and paper holding roller.
5.3
5.4
5.5
Can groove of head cam unit is worn?
N
Y
Replace head cam unit.
Corrected?
N
Y
GO TO 5.5
Reduction gear worn?
N
Y
Replace reduction gear.
Replace motor unit.
Corrected?
N
Y
GO TO 1.1
GO TO 5.4

8.4 Troubleshooting Table

8.4.1 Power source

Nature of Trouble	Condition of Trouble	Possible Cause	Check Point	Remedy
Unable to set power on	The line voltage V_L and other control voltage are not present. (No LCD display)	(1) The power fuse is blown off.	● Check conductivity of the F1 fuse. ● Measure resistence between the check terminals "GND(P)" and "Vp" of the MOSU circuit board. ● Check if the zener diode ZD7 is short-circuited.	● Replace the fuse if it is blown off and the connection between the check terminals "GND(P)" and "Vp" is not short-circuited. ● If the connection between the check terminals "GND(P)" and "Vp" is short-circuited, dismount the M-160 printer and other installed optional units to find out the cause of the short-circuit. If the MOSU circuit board is suspected to be responsible for the short-circuit, check the power source circuit.
		(2) A reduced battery voltage.	● Check the check terminals "GND(P)" and collector of the transistor Q8 on MOSU board.	● When the voltage is lower than 4.5V, recharge the battery by using an AC adapter.
		(3) The power-on switch is dead.	● Check and see if CN4-19 and CN5-18 of the MOSU substrate do not go low when the power-on switch is turned to the "on" position.	● Replace the connection of the connectors CN4/CN5. ● Replace the keyboard unit.
		(4) The power-on switch circuit does not function properly.	● Check signals form IC "5E" pin 11, "5D" pin 8 and "7E" pin 2.	● Replace the detected malfunctioning IC (s).
		(5) No circuit voltage V_L is present.	● Measure the resistance of the transistor Q8 of the MOSU circuit board.	● Replace the transistor Q8.
		(6) The reset circuit remains working	● Check the reset switch.	
			● When the power-on switch is turned to the "on" position, IC "5F" pin 3 turns (H → L) and pin 11 turns (L → H). ● IC "4F" pin 4 and IC "7D" pin 4 turn (L → H).	● Replace the detected malfunctioning IC (s).
		(7) The main CPU is dead.	● Check the pins 40/39 of the main CPU 8G and read their pulse outputs at the interval of approximately 1.6 μsec. ● Check the output of the oscillator CR3.	● Replace the main CPU 6301. ● If it has no effect, replace the oscillator CR3.

Nature of Trouble	Condition of Trouble	Possible Cause	Check Point	Remedy
		(8) The VIEW ANGLE adjustment circuit of the keyboard does not function properly.	● Check if the V_{CL} voltage is being provided to CN5 pins 1 and 2 of the MOSU circuit board.	● Replace either the transistor Q1 or Q2, whichever appropriate, of the keyboard.
		(9) No V_{LD} voltage is provided from the power source.	● Check if CN5 pin 7 of the MOSU circuit board has a potential of approximately 7V. ● Check the output of IC "2C" pin 4.	● The diode D7, the capacitor C2 ro IC "2C" is suspected to be responsible for the malfunction.
		(10) No signals for LCD are present.	● Check and see if all of CN5 pin 4 (C/$\overline{D}$), pin 6 (SD), pin 7 ($\overline{SCK}$) and pin 5 (CLK) provide a pulse output when the power line is connected or power is supplied by way of keying-in at the keyboard.	● Replace all detected malfunctioning ICs, which can be IC "11H", "1F" or some other ICs.

Nature of Trouble	Condition of Trouble	Possible Cause	Check Point	Remedy
Unable to set power off.	Power keeps on coming after the power-off switch has been turned to the "off" position.	(1) The program is running out of control.	● Depress the reset switch to see if power supply can be cut off.	● If power supply can be cut off by depressing the reset switch, most likely the program is responsible for the trouble. ···· Examine the program and its operations. If the trouble can not be eliminated by checking the program, replace the main CPU "8G". ····· Carry out a RAM check with the test program.
		(2) The power switch does not function properly.	● Check and see if both CN5 pin 18 and CN4 pin 19 of the MOSU substrate go high with power off.	● If they do not go high, replace the keyboard. ····· Either the power switch of the keyboard or the keyboard connector is considered to be responsible for the trouble.
		(3) The slave CPU does not work properly.	● Check and see if IC "7E" pin 1 goes high when power supply is turned off.	● If it does not go high, replace the slave CPU "6D".
		(4) Either the power switch circuit or the interrupt circuit contains defective elements.	● Check the PW and SW signal lines of IC "5E" pin 10, "2E" pins 6 and 12 and other similar pins by turning the power switch on and off alternatively.	● Replace the malfuntioning IC (ss).
		(5) The power-on circuit contains defective elements.	● Make sure that power is cut off when the reset switch is depressed.	● If power is cut off by depressing the reset switch, IC "7E" is suspected to be responsible for the trouble. ····· Check the outputs of IC "7E" pins1 and 1b. If power can not be cut off depressing the reset switch, the transistor Q8 is likely to be responsible for the trouble. ··· Check the resistance of the transistor.
Fuse goes blown off.		(1) The zener diode ZD7 for overvoltage prevention does not work properly.	● Check and see if breakdown of the zener diode ZD7 occurs when it is not short-circuited or put under less than 7V.	● Replace the diode ZD7.
		(2) The charging voltage is too high.	● Check if the battery is correctly connected with the connector and the output voltage of the AC adopter is not too high.	● Replace the battery of the AC adapter whichever is appropriate.

Nature of Trouble	Condition of Trouble	Possible Cause	Check Point	Remedy
		(3) The circuit which is connected with the output of the fuse is short-circuited.	● Dismount the printer to detect to the short-circuited unit. Then check each element involved.	● Replace either the whole unit or the unit which is found to be short-circuited.
No back up power is available	Programs stored in the RAM are destructed. (sometimes it is unable to make power on.)	(1) See items (1) through for "Unable to make power on".		
		(2) The back up circuit contains defective elements.	● Check to see if the transistor Q10 of the MOSU circuit board has the emitter voltage of approximately 3V. Also check the collector and the base voltage (less than 4V).	● Replace the Q10 transistor if the emitter voltage is not present. ● Replace the zener diode ZD3 if the base voltage is as low as the GND level.
		(3) Some of the backed up elements do not work properly.	● If power on can be set, make it on and see whether any other troubles are involved. ● If power on can not be set, check to find out whether there are short-circuited back up elements.	● Replace the elements which are responsible for the trouble.
Unable to detect low voltage.	Programs go out of control or non-operational without "Charge battery" indication.	(1) No bias is provided to the voltage detection circuit.	● Check if the base of the transistor Q1 of the MOSU circuit board goes low when the power switch is set to the "ON" position.	● If no low level is attained, check the $\overline{\text{PW SW}}$ signal (CN5 pin 18 of the MOSU circuit board). If the latter is not low, check again the connection of the keyboard connector. Replace the keyboard if it can not be made operational.
			● Check if voltage is provided to the collector of the transistor Q1.	● Replace the transistor of no volatge is present.
		(2) Some of the elements of the voltage detection circuit do not function properly.	● Pull out the battery connector temporarily with power on and see if the pin 7 of IC "2B" goes low. ● Check the $\overline{\text{POWER ABNORMAL}}$ signal line. Also check the output of IC "5E", "4E" and "2E".	● If it does not go low, replace IC "2B" of the MOSU circuit board. ● Replace the detected defective element (s).

Nature of Trouble	Condition of Trouble	Possible Cause	Check Point	Remedy
"CHARGE BATTERY" is indicated	Indication occures during operation or while the power on condition is maintained.	(1) The battery voltage is too low.	● Measure the battery voltage V_B.	● Recharge the battery. If duration of operation of the battery is remarkably reduced after recharge, the battery should be replaced.
		(2) Some of the elements of the voltage detection circuit do not function properly.	● Check if IC "2B" pin 1 has the voltage greater than 1.2V and if the output of the pin 7 is at the HIGH level. If the output of the pin 7 is found high, check the $\overline{\text{POWER ABNORMAL}}$ line of IC "5E", "4E" and "2E".	● If the pin 1 has the voltage greater than 1.2V and the output of the pin 7 is at the LOW level, replace IC "2B". ● Replace defective IC (s).
Unable to recharge the battery	"CHARGE BATTERY" indication does not go off after recharge of the battery with an AC adapter, or the battery does not come to be abled.	(1) The output voltage of the AC adapter is too low.	● Check and see of the output voltage of the AC adapater is as high as 6V.	● Replace the AC adapter.
		(2) Some of the elements of the recharge circuit do not function properly.	● Check the conductivity of the diode D2 and the resistor R1.	● Replace defective IC (s).
		(3) The battery does not function properly.	● Check the connection of the battery connector and then pull out the connector to measure the battery voltage. ····· Restore the connector, put power on and then check the battery voltage. (Check the non-loaded condition and the non-loaded voltage.)	● If a voltage greater than 4.5V is not attained after recharge or a significant fall of voltage occurs when the power switch is set on, replace the battery.
		(4) The battery voltage circuit (V_B line) is almost short-circuited.	● Check the resistance of line and the ground line. If the resistance is to low (almost as low as 1 ohm), dismount the built-in printer and the extension unit to pinpoint the cause of the trouble.	● Replace the defective unit or element (s).

8.4.2 Initialization

Nature of Trouble	Condition of Trouble	Possible Cause	Check Point	Remedy
Power can be set on but no displays become operational. (The logic voltage V_L is present.)	The main CPU is completely out of work.	(1) The reset signal can not be released.	● Check if IC "5F" pin 3 goes low approximately 30 msec after power is set on.	● If it remains high, replace IC "5F"
			● Check if IF "4F" pins 4 and "7C" pin 5 go high approximately 30 msec after power is set on.	● If they remain low, replace either IC "4F" or "7C".
			● Check if the main CPU "8G" pins 40 and 39 have a pulse output.	● Replace the main CPU "8G"
			● Check if IC "5F" pin 11 goes high approximately 30 msec after power is set on.	● If it remains low, replace IC "5F".
			● Check if the reset signal of each of IC 9G, 10G and 16D and the slave CPU "6D" is normal.	
		(2) The oscillator are not operational.	● Check if the respective oscillators CR3 and CR1 of the main and slave CPU are opertional.	● Replace the non-operational oscilator (s). If it does not (or they do not) become operational, replace the main and/or the slave CPU.
	Programs can not be executed.	(1) No pulse output is present on the address data bus line.	● Just after power on, check if all outputs of the main CPU "8G" pin 22 to 37 are pulsing.	● Replace the main CPU "8G". ● If a low level signal is always present, replace by turn each of the elements which are connected to the address data bus line.
			● Check all inputs and outputs of the address latch IC "16E" pin 11 as well as of "16E" and see if a pulse output is present.	● Replace the main CPU when IC "16E" pin 11 (address strobe) is not porviding a pulse output. ● If a pulse output is not present on the output side, replace IC "16E".
			● Check the address lines 8 to 10 at IC "11G" to see if an output signal which is identical with the input signal is present.	● Replace IC "11G".
		(2) No ROM select signal is provided or some of the ROMs are not functional.	● Check if IC "15D" pins 7, 9, 10 and 11 have a pulse output.	● Replace IC "15D" or "8E".
			● Replace one by one the ROMs until the system becomes operational.	

Nature of Trouble	Condition of Trouble	Possible Cause	Check Point	Remedy
	Interrupt is proceeding.	(1) Either the BRAEAK or MENU key is kept on.	● Check if any of the keys is left depressed. ● Dismount the keyboard and check passage of the KRTN signal and the KSC signal.	● Replace either the rubber contact switch or the key top, whichever is appropriate. ● Replace the keyboard if the resistance does not go infinitely high when the keyboard is dismounted.
	The system is operational whereas the indicators are dead. (Programs are executed without any display.)	(1) The I/O select (address select) signal does not work properly.	● Check if both IC 9E pins12 and 10 go low. If either of them does not go low, check the input signal for it.	● Any of IC "9G", "1E", "2E" or "3E" is suspected to be responsible for the trouble. So check the signal of each of them and repalace the defective IC. ● If IC "2E" pin 9 is low, check IC "5E" or "16".
		(2) No serial data are provided to LCD.	● Check outputs of IC "10G" pin 13, "10H" pin 6 and "11H" pin 12 to see if a pulse output is contained in each signal.	
	Operation stops unexpectedly or goes out of control.	(1) There is an insufficient connection or disconnection in any of the IC sockets for ROMs and CPUs or in any of the circuit patterns.	● Check all signals (address signals, data bus signals, line signals etc.) from the main CPU and the connections among the elements.	● Replace any defective IC socket (s) and repair the broken patterns.
The MENU screen shows some display but the system is dead.	Selection of operation mode (BASIC/ MONITOR or/ Application) can not be achieved through the keyboard.	(1) The keyboard is in a keyed-in condition or an interrup operation from the keyboard is under way in the circuit.	● Check the function keys PF1-PF5, the MENU key and other data keys to see if any key switches are left in a depressed condition.	● Replace the defective key switches or the keyboard.
			● Check the $\overline{\text{KB REQUEST}}$ signal line at IC "2E", "6C", "1E" and "1G".	● Replace the detected defective ICs.

8.4.3 Keyboard

Nature of Trouble	Condition of Trouble	Possible Cause	Check Point	Remedy
Unable to key-in	All the keys are functionless for input.	(1) Bad contact of the keyboard connector.	● Check connection of the connectors CN4 and CN5 on the MOSU circuit board.	● Redo the connection or replace the connectors. ● If the connector cable is damaged, replace the keyboard unit.
		(2) No KRTN signal is provided.	● Depressing the corresponding keys, check the signals of IC "1G" pin 13, of the main CPU "8G" pins 18 and 5.	● Replace the faulty ICs.
		(3) The RESET signal is faulty.	● Check IC "5G" pin 1 of the MOSU circuit board to see that it goes low after "power-in".	● Check the reset circuits including IC "7C" and "4F".
		(4) The KSC signal line is faulty.	● Check the KSC output signals of IC "5C" to see if they go low after "power-on".	● Replace IC "5C" if all of them do not go low.
	Some of the key switches are not functional for input.	(1) Bad contact of the keyboard connector.	● Measure resistance between the KRTN signal and the KSC signal of the corresponding switches at CN4 and CN5 of the MOSU circuit board, depressing the switches.	● If the line is dead (Resistance of approximately 15kΩ can not be detected when the switches are depressed), replace the whole keyboard.
		(2) No interrupt ($\overline{KB}$ $\overline{REQUEST}$) occurs by specific KRTN signals.	● Signal out the key code (KRTN or KSC) which can not be keyed in by consulting the key code table.	● Replace the keyboard. If the trouble is a keyboard trouble, check the diodes D3 to D14. If the KRTN signal can not be keyed in on all the keys, then replace IC "1G" of the MOSU circuit board. ● If the KSC signal can not be keyed in, then replace IC "5G".
	One of the switches is not functional for input.	(1) The contact of the swtich itself is faulty.	● Single out the key code which can not be keyed in by consulting the key code table and measure resistance between the KRTN signal and the KSC signal, depressing the switches.	● If the resistance comes to 15 kΩ from infinite when the switch is depressed, replace the switch. ● If the function key is responsible for the trouble, replace the rubber contact switch. ● If neither of the above remedies is effectless, replace the keyboard unit.

Nature of Trouble	Condition of Trouble	Possible Cause	Check Point	Remedy
	Other keys are functional for input.	(1) Key switches are faulty.	● Check if any key is kept depressed. Check all KRTN codes to confirm if any code is on low level.	● Replace the key switches or keyboard unit.
Key-in occurs at some non-touched keys.	Some of the keys input in data without the corresponding switches being depressed.	(1) Binding of key switches.	● Check if the key switches are in touch with the case cover. Also check if the switches can be fully lifted by means of the return coil.	● Adjust mounting of the keyboard. ● Replace the return coil or the switches.
		(2) The keyboard has been deformed.	● Check if the keyboard has been deformed due to bending or torsion.	● Redo mounting of the keyboard. If it has no effect, replace the keyboard unit.
		(3) Either the input circuit of the KRTN signal is faulty or some of the keyboard switches are defective.	● Check the key codes of the faulty keys as well as the KRTN signal line of the MOSU circuit board. ● If the line is low when the keys are not depressed, dismount the keyboard to determine whether the cause for the low level is in the keyboard side or the MOSU circuit board side.	● If the keyboard is responsible for the trouble, replace the switches. If the replacement of switches has no effect, replace the keyboard unit. ● If the trouble is attributable to the MOSU circuit board, replace the faulty element in IC "1G" "2G" "3G".
Stored input data can be altered unexpectedly.	Stored letters are different from the keyed in letters. (e.g. A keyed in character is altered to a mere "space".)	(1) The gate signal for the keyed in data (select line) is faulty.	● Check IC 3G and 4G of the MOSU circuit board to see if they produce the gate signal for the keyed in data at the time of key input.	● Replace faulty elements in IC "3G", "4G" and "9E".
		(2) Improper output timing of the KSC signal.	● Check IC "5G" pin 11 as well as the wave form of each of the KSC output signals.	● Replace the detected faulty elements in IC "5G" and "9E".
		(3) The main CPU is defective.	● Confirm that the respective KRTN signal is sent to the data bus line by way of IC "3G" or "4G".	● Replace the main CPU "8G".

8.4.4 LCD

Nature of Trouble	Condition of Trouble	Possible Cause	Check Point	Remedy
The display system is dead.	The display feature does not totally function.	(1) Maladjustment of the volume control of the view angle.	● Turn back and forth the volume control of the view angle on the keyboard.	● If no display appears, some other causes should be suspected
		(2) Bad contact of the connector section.	● Check the connection between LCD and the keyboard and between the latter and the MOSU circuit board CN5.	● Redo connection of the connector.
		(3) The voltage V_{LD} for LCD is not available.	● Check the MOSU circuit board CN5 pin 17 to see if it has the voltage of approximately 7V.	● Check the diodes, D7 and D5 and IC "2C". Replace all defective elements.
		(4) The view angle regulating circuit of the keyboard is not functioning properly.	● Check if V_{CL} voltage is provided to CN5 pin 17 of the MOSU circuit board.	● Replace the transistor Q1 or Q2 of the keyboard.
		(5) There is no output of signals for LCD.	● Check the following signals at CN5 of the MOSU substrate after power has been keyed-in through the keyboard to see if they are pulse outputs. *pin 4 (C/D) : Carry/Data *pin 6 (SD) : Serial data *pin 7 (SCK) : Shift clock *pin 5 (CLK) : Clock for the ROW line.	● Replace the detected defective IC(s), which can be IC "12H", "1F" and so on.
		(6) The LCD unit itself is defective.	● Dismount IC μPd 7227 one by one from the LCD unit to find defective ICs.	● If the system does not work properly after replacement of defective ICs, then replace the whole LCD unit.
	The display feature does not function partially. (Partial alteration of stored data occurs.)	(1) The chip select signal of LCD is faulty.	● Check IC "16G" pin 9 to 14 as well as pins 1 to 3 after power is put on or while the screen is being scrolled.	● If the output (pins 9 to 14) of IC "16G" is faulty, replace the IC. ● If the trouble is found on the input side, then replace IC "9G".
		(2) Some of the ICs of the LCD unit are faulty.	● Check and see which block is not displayed. (Detect the responsible IC(s) out of ICs No. 0 to 5.)	● Replace the faulty IC(s).
		(3) Contact of the connector is faulty.	● Check conductivity between LCD and the keyboard and between the latter and MOSU. (CS1 ~ 6 signal lines).	● Redo the connection of the connector. ● If the line is disconnected somewhere in the keyboard, replace it with a new one.

Nature of Trouble	Condition of Trouble	Possible Cause	Check Point	Remedy
The display contrast becomes reverse.	Black and white is displayed reversely.	(1) Serial data line signal is reversed.	● Check IC 11H pins 11 and 12 of the MOSU circuit board.	● Replace IC11H if the signal has the same phase for Pins 11 and 12, and replace IC 10H if it has an opposite phase.
The view angle can not be adjusted.	The veiw angle does not change if the volume control of the unit is turned.	(1) The volume control switch is faulty.	● Check if resistance of VR1 on the keyboard varies when the volume control swtich is turned.	● If the resistance does not vary, replace VR1.
		(2) One of the transistors is faulty.	● Check if the base voltage of the transistor Q2 on the keyboard varies when the volume control of VR1 is turned.	● If the voltage does not vary, replace the transistor Q1. ● If the voltage varies, replace the transistor Q2.
The uppermost two lines of LCD can not be displayed properly.	They can not be displayed totally or correctly.	(1) Some of ICs on LCD are faulty. (The ROW line can not be controlled properly.)		● Replace IC μPd 7227 No. 0.
The lower most two lines of LCD can not be displayed properly.	Same as above	(1) Same as above.		● Replace IC μPd 7227 No. 2.
Totally meaningless lines are displayed after power is put on.	While some letters or illustrations are displayed, they are totally meaningless.	(1) Setting is not done properly.	● Check if IC "11H" pin 15 is high approximately 30 msec after power is put on. If it is not high, check IC "1F" and "3F".	● Replace the detected faulty IC.
	Displayed, but the picture is cleared off.	(1) SCK signal is always generated.	● Check IC 1F pin 2 of the MOSU circuit board.	● Replace IC 9E if Pin 2 remains on low level, and replace IC 1F if it is on high level.

8.4.5 Micro Printer (Model-160)

Nature of Trouble	Condition of Trouble	Possible Cause	Check Point	Remedy
1. No dot can be printed.	Motor rotates normally, but no dot can be printed.	(1) The timing signal TS is not detected.	● Check the connector CN6 pin 19 and IC "8D" pins 14 and 15 of the MOSU circuit board.	● If the TS signal is not present at CN6 pin 19, replace the FPC cable or the T detector.
		(2) The slave CPU or the driver circuit is not functioning properly.	● Check the slave CPU "6D" pins 13 to 16 and IC 13D pins 3, 5, 9 and 7.	● Replace the slave CPU "6D" or the driver IC "13D" whichever is appropriate.
		(3) The reset signal is not detected.	● Check IC "8D" pins 11 and 12.	● Replace IC "8D" or the diode D18, whichever is appropriate. ..... If the signal is not detectable at the diode, PFC or the R detector should be replaced.
		(4) Rupture of FPC (flexible printed cable) common wire.	● Check FPC common wire for electrical continuity.	● Discontinuity being confirmed, replace FPC (5-2).
		(5) Bad contact between FPC common wire and circuit board terminal.	● Check solder connecting circuit board terminal and FPC common wire for electrical continuity.	● Discontinuity being confirmed, resolder the parts.
		(6) Faulty relative position of platen and print head.	● Check distance between platen and printing lever's impact face. ● Proper distance: 0.6 mm	● Distance being improper, correct as follows: 1) Loosen the two set-screws. 2) Displace print head so that reference face of print head carriage and impact face of printing lever become flush, as illustrated below. 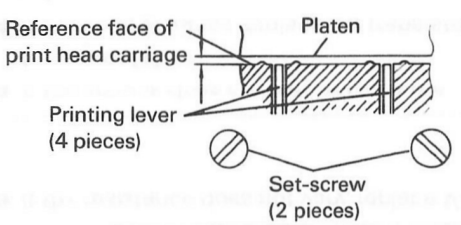 3) Proper distance between platen and printing lever's impact face is approx. 0.6 mm. 4) Retighten the screws.

Nature of Trouble	Condition of Trouble	Possible Cause	Check Point	Remedy
2. Constant omission of dots at particular dot positions.	A particular print solenoid does not operate. (Printing is not done for the four columns to be covered by a particular solenoid.)	(1) The driver circuit or the slave CPU is not functioning properly.	● Check CPU "6D" pins 13 to 16 and the driver IC "13D" pins 3, 5, 7 and 9.	● Replace either the slave CPU "6D" or the driver IC "13D" whichever is appropriate. ● If the driver IC is not functioning properly, check if the head coil is short-circuited or disconnected.
		(2) Rupture of FPC.	● Check FPC for electrical continuity.	● Discontinuity being confirmed, replace FPC (5-2).
		(3) Bad contact of FPC.	● Check corresponding FPC terminal and circuit board terminal for electrical continuity.	● Discontinuity being confirmed, resolder terminals.
		(4) Bad contact of print solenoid wire.	● Check for electrical continuity the solder connecting the corresponding print solenoid terminal wire and FPC terminal.	● Discontinuity being confirmed, resolder.
		(5) Rupture of print solenoid.	● Check resistance of corresponding solenoid. (For the value of resistance, refer to Par. 1.2-11, Chap. 1.)	● The measured value being lower than specified, repalce print head assy (5-1).
		(6) Faulty operation of print head.	● Check corresponding push rod for smooth operation.	● Faulty operation being confirmed, replace print head assy (5-1).
		(7) Faulty operation of printing lever.	● Check corresponding printing lever for smooth operation.	● Faulty operation being confirmed, replace print head carriage assy (5-3).
3. Inconstant omission of dots at particular position.	Inconstant omission of dots occurs at dot position to be covered by a particular print solenoid.	(1) Bad contact or rupture of FPC.	● Same as with POSSIBLE CAUSE 2), NATURE OF TROUBLE 2.	● Discontinuity being confirmed, resolder.
		(2) Bad contact of print head solenoid wire.	● Same as with POSSIBLE CAUSE 3), NATURE OF TROUBLE 2.	● Discontinuity being confirmed, resolder.
		(3) Faulty operation of print head.	● Same as with POSSIBLE CAUSE 5), NATURE OF TROUBLE 2.	● Faulty operation being confirmed, replace print head assy (5-1).
		(4) Faulty operation of printing lever.	● Same as with POSSIBLE CAUSE 6), NATURE OF TROUBLE 2.	● Faulty operation being confirmed, replace print head carriage assy (5-3).
	Inconstant omission of dots occurs at unparticular dot positions.	(1) Bad contact of FPC.	● Check electrical continuity between FPC common wire terminal and circuit board terminal.	● Discontinuity being confirmed, resolder.

Nature of Trouble	Condition of Trouble	Possible Cause	Check Point	Remedy
4. Character width changes.	Character width changes at a particular column.	(1) Wear or damage of gears.	● Check motor gear, reduction gear and lead cam internal gear for wear or damage.	● Replace worn or damaged part, if any: motor assy (2-1), reduction unit (3-7), lead cam assy (3-1).
		(2) Wear of lead cam groove.	● Check lead cam groove for wear.	● Cam groove being found worn, replace lead cam assy (3-1).
5. Motor does not rotate.	Motor does not rotate in spite of application of Print Command.	(1) Improper power supply to motor.	● Check motor terminal voltage using tester or oscilloscope. Rated voltage: $4.5^{+0.5}_{-0.7}$V DC	● Check power supply circuit and repair it, if necessary. 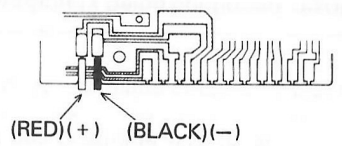
		(2) Bad contact of motor lead wire.	● Check electrical continuity between motor lead wire and circuit board terminal of motor terminal.	● Discontinuity being confirmed, resolder the parts concerned.
		(3) Defective motor.	● Apply 3.8V across motor and check if it rotates.	● If motor does not rotate, replace motor assy (2-1).
		(4) The slave CPU is not functioning properly.	● Check and see if the slave CPU "6D" pins 17 and 28 are at the lower level.	● Replace the slave CPU "6D".
		(5) Some of the elements of the motor-on circuit are not functioning properly.	● Check and see if *IC "4E" pin 2 output is low, *IC "4E" pin 4 output is high, *"7E" pin 13 output is high and *the transistor Q13 emitter has the voltage of +5V.	● Replace defective elements. ● If the transistor Q13 is not functioning properly, make sure that the motor coil of the printer is neither short-circuited nor disconnected and check the transistor Q12 before replacing defective elements.
			● Check and see if *IF "4E" pin 6 is high, *the emitter of the transistor Q9 is high and *the collector of the transistor Q12 is low.	● Replace defective elements. ● If either the transistor Q9 or Q12 is not functioning properly, check the transistor Q13 and the diode D1. Also check the motor coil of the printer to see if it is not short-circuited.

Nature of Trouble	Condition of Trouble	Possible Cause	Check Point	Remedy
6. Motor won't stop. (The motor would not stop turning.)	Turning of the motor is not terminated after the print cycle is over.	(1) Faulty resetting detector.	● Rotate lead cam and check if signal appears at resetting detector output terminal by means of oscilloscope.	● If reset signal does not appear, replace circuit board assy (4-2) including reed switch.
		(2) Some of the elements of the RS signal circuit are not functioning properly.	● Check IC "8D" pins 11 and 12 to see if the RS signal is provided when the printer head is returned to the left side.	● Check the diode D18 if IC "8D" pin 12 has no output. Replace either IC "8D" or the diode D18, whichever is appropriate. ● Replace the slave CPU "6D" if IC "8D" pin 12 has the RS signal.
		(3) Some of the elements of the drive circuit are not functioning properly.	● Check IC "4E" pin 5 and 6.	● Replace the slave CPU "6D" if the pin 5 is low. ● Replace IC "4E" if the pins 5 and 6 are high.
			● Check the emitter of the transistor Q9 and the collector of Q12.	● If the emitter of Q9 is high, check Q12, Q13 and the motor coil and replace all defective elements. ● If Q12 is not functioning properly, check Q13 and the motor coil and replace all defective elements.
7. Paper feeding cannot be performed.	Paper cannot be fed and consequently printing is repeated at the same spot on the paper.	(1) Faulty feeding of paper.	● Check paper for width, thickness and roll diameter. ● For specifications of paper, refer to Par. 1.2-5, Chap. 1. ● Check paper feeding course for clogging.	● Paper not being as specifeied, replace.
		(2) Wear of internal cam of ribbon feeding cam.	● Check for wear the internal cam of ribbon feeding cam. 	● Internal cam being worn, replace ribbon feeding cam (3-4).
		(3) Paper feeding lever being broken or worn.	● Check paper feeding lever for break or wear.	● Break or wear being found, replace frame assy (1-11).
		(4) Damage or wear of paper feeding assy.	● Check gears and other elements of paper feeding assy for damage or wear.	● Damage or wear being found, replace paper feeding assy (6-1).
		(5) Rupture or damage of one-way spring.	● Check one-way spring for rupture or damage.	● Rupture or damage being confirmed, replace one-way spring (6-2).

Nature of Trouble	Condition of Trouble	Possible Cause	Check Point	Remedy
		(6) Damage of paper holding roller.	● Check paper holding roller for damage.	● Damage being found, replace paper holding roller (6-3).
		(7) Permanent deformation of paper holding spring.	● Check paper holding spring for permanent deformation. 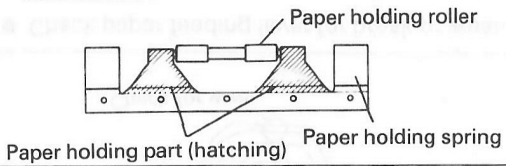	● Permanent deformation being confirmed, replace frame assy (1-1).
8. Irregular pitch of paper feeding.	Characters are not printed at regular line spacing or lines overlap.	(1) Faulty feeding of paper.	● Same as with POSSIBLE CAUSE 1, NATURE OF TROUBLE 7.	● If paper not being as specified, replace.
		(2) Wear of internal cam of ribbon feeding cam.	● Same as with POSSIBLE CAUSE 2, NATURE OF TROUBLE 7.	
		(3) Wear or damage of paper feeding lever.	● Same as with POSSIBLE CAUSE 3, NATURE OF TROUBLE7.	
		(4) Wear of damage of paper feeding assy.	● Same as with POSSIBLE CAUSE 3, NATURE OF TROUBLE 7.	
		(5) Fatigue of one-way spring.	● Check one-way spring for fatigue.	● The spring being found fatigued, replace it (6-1).
		(6) Faulty operation (unsmooth rotation) of paper holding roller.	● Check paper holding roler for wear, damage or quantity of lubricant.	● Wear or damage being found, replace paper holding roller (6-3). Quantity of lubricant being insufficient, supply specified lubricant (refer to Par. 2.2.2 "Lubrication Requirements").
		(7) Permanent deformation of fatigue of paper holding spring.	● Same as with POSSIBLE CAUSE 7, NATURE OF TROUBLE 7.	
9. Inking mechanism does not operate at all.	Printing mechanism operates normally, but inking mechanism does not operate at all.	(1) Damage of spool gear assy.	● Check spool gear assy for damage.	● Spool gear assy being found damaged, replace it (7-1).
		(2) Damage of ribbon feeding cam.	● Check external toothed part of ribbon feeding cam for damage.	● Damage being found, replace ribbon feeding cam (3-4).
		(3) Damage of ribbon feeding gear.	● Check ribbon feeding gear for damage.	● Replace ribbon feeding gear (3-6), if damaged.
		(4) Defective ribbon cassette.	● Check ribbon cassette for smooth rotation.	● Replace ribbon cassette (7-2), if it does not rotate.

8.4.6 RS-232C

Nature of Trouble	Condition of Trouble	Possible Cause	Check Point	Remedy
No data can be sent from RS-232C.	Both ± 8V are not provided. (No DTF signal is provided.)	(1) The slave CPU does not function properly.	● Check if +8V is provided to IC "6B" pin 14 of the MOSU circuit board. ● Check the slave CPU "6F" pin 31	● Replace the slave CPU if the slave CPU "6D" pin 31 is high.
		(2) The $\overline{\text{SWL}}$ signal line does not function properly.	● Check IC "7E" pins 5 and 12. (If the slave CPU is OK, the pin 5 should be high.)	● Replace IC "7E" if the pin 5 input is inversely sent to the pin 12.
			● Check the collector side of the transistor Q2 as well as IC "3A" pin 14.	● Replace the transistor Q2 if the Q2 collector (IC "3A" pin 14) is high.
		(3) The regulator circuit contains some faulty elements.	● Check if IC "3A" pin 10 has a pulse output.	● If it has no pulse output, replace IC "3A" after confirming that the capacitor C24 functions properly.
		(4) The overcurrent protection circuit is at work.	● Check IC "3A" pin 13. (See if it has a potential higher than the V_B voltage by more than 0.7V.)	● If a potential difference greater than 0.7V exists, the overcurrent protection circuit starts functioning to make the pin 10 high and stop the +8V output. So, replace the elements which are responsible for the existing overcurrent. (They can be the T1 coil and IC "6B".)
		(5) Malfunction of the T1 coil.	● Check resistance of the T1 coil to see if the coil is broken.	● Replace the T1 coil if it is broken.
	Either of ± 8V is not provided.	(1) Malfunction of the rectifying diode.	● Check conductivity of the diodes D3 and D4.	
	Unable to detect a CTS signal.	(1) The system is not in the condition where data can be sent to the connected units.	● Check if the sending mode is half duplex for receiveing data.	● If the sending mode is half duplex and the system is taking in data, it normally stops sending data. ····· No problem.
			● Check conductivity of the RTS/CTS line, while the interface cable is perfectly connected.	● Replace the interface cable or the connector.
			● Check if CTS signals are sent out from the connected units.	

Nature of Trouble	Condition of Trouble	Possible Cause	Check Point	Remedy
		(2) Malfunction of some of the elements in the CTS signal line.	● Check if the signal levles of IC "7B" pins 13 and 11 are inversed. *(The pin 13 has level of RS-232.)	
		(3) Malfunction of the main CPU	● Make sure that the main CPU "8G" pin 14 is low.	● Replace the main CPU "8G".
	No TXD signal is provided.	(1) Malfunction of some of the elements of the driver ICs.	● Check IC "7C" pins 9 and 10 as well as IC "6B" pins 4 (5) and 6. ····· Make sure that the output of IC "6B" pin 6 is of the same level (± 8V) as that of RS-232C.	● Replace IC "7C" or "6B", whichever is appropriate.
		(2) Malfunction of the main CPU.	● Check if the main CPU "8G" pin 9 has pulse output.	● If it has not pulse output, replace the main CPU.
Unable to receive data.	CD signals are not detected.	(1) Some of the connected units or interfaces are not functioning properly.	● Check if CD signals are sent out of the connected units.	● Replace the units which are involved in the trouble.
			● Check conductivity of the interface cables to see if they are properly connected.	● Replace the faulty interface cables or the connectors.
		(2) Some of the elements for the CD signal line are faulty.	● Check IC "7B" pins 1 and 3 to see if the signal levels are inverted.	● Replace IC "7B".
	The output voltage of ± 8V is unstable.	Either smoothing capacitors or IC "3A" are not working properly.	● Check the capacitors C3, C9, C4 and C10.	● If the capacitors are not faulty, replace IC "3A". ● If any short-circuited/open capacitors are found, replace them and check the diodes D3/D4 at the same time.
	DSR signals are not detected.	(1) Some of the connected units or interfaces are not functioning properly.	1. Check if the power source for the connected units is on.	● Make sure that the connected units have proper power supply by turning the power switch on and off repeatedly.
			2. Check the connected units to see if DSR signals are sent from them.	● Replace the faulty interface cables or the connectors.
			3. Check conductivity of the interface cables to see if they are properly connected. (DTR/DSR line).	● Replace the connected units if no DSR output is detected.
		(2) Some of the elements for the DSR signal line are faulty.	● Check IC "7B" pins 14, 10 and 8. *(The pin 10 should be at the RS-232 level.)	● Replace the transistor Q6 if the pin 14 is low. ● Replace IC "7B" if output of the pins 10 and 8 is not inverted.

Nature of Trouble	Condition of Trouble	Possible Cause	Check Point	Remedy
		(3) The main CPU is faulty.	● Check the main CPU "8G" to see its level is low.	● Replace the main CPU "8G".
	No RTS signals are sent out.	(1) Either the slave CPU or the ICs for the driver are not functioning properly.	● Check IC "6B" pins 9 (10) and 8. *(The pin 8 should be at the RS-232 level.)	● Replace the slave CPU if IC "6B" pin 9 (10) is low. ● Replace IC "6B" if the output of IC "6B" pin 8 is not high (+8V).
Unable to receive data.	CD signals are not detected.	(1) The slave CPU is faulty.	● Check the slave CPU "6D" pin 22 to see if it is low.	● Replace the slave CPU "6D" if the pin is not low.
	RXD signals are not detected.	(1) Some of the connected units or interfaces are not functioning properly.	● Check the connected unit to see if RXD signals are sent from them.	● Replace the faulty units.
			● Check conductivity of the interface cables to see if they are properly connected.	● Replace the faulty interface cables or the connectors.
		(2) Some of the elements for the RXD signal line or the slave CPU are not functioning properly.	● Check IC "7B" pins 10 and 8 to see if the signal levels are inverted. *(The pin 4 should be at the RS-232C level.)	● Replace IC "7B".
			● Check IC "2F" pin 5. If it is high, check the pin 3.	● If IC "2F" pin 5 is low, check IC "1F" pins 11 and 12. If they are both low, replace IC "1F". ····· If they are both high, replace the slave CPU "6D". ● If IC "2F" pin 3 has no output, replace IC "2F". ····· If the pin 3 has output, replace the slave CPU "6D".
The interfaces and the signals are normal but entail no action.	A WRAP test based on the test program can be conducted without any trouble.	(1) Either the singnal ground or the frame ground (CG) is not connected properly.	● Check conductivity of the signal ground and the case ground.	● Replace the faulty interface cables or the connectors.
		(2) The mode setting is different from that of the companion equipment (in beat, speed, etc.)	● Confirm the mode setting for the companion equiment (in program, switch, etc.)	

8.4.7 Serial

Nature of Trouble	Condition of Trouble	Possible Cause	Check Point	Remedy
Data can not be transferred serially.	No ± 8V is provided.	(1) See the description for RS-232C.	See the description for RS-232C.	See the description for RS-232C.
	There is no output of POUT signals.	(1) Some of the elements for POUT signals are faulty.	● Check IC "7C" pins 11 and 12 and "6B" pin 2 to see if they are low. Also check IC "6B" pin 3 to see if it has ± 8V.	● Replace the faulty elements. If ICs "7C" and "6B" are normal, replace IC "9G" after checking output of its pin 9.
	No output of $\overline{\text{PTX}}$ signals is detected.	(1) Either some of the elements for the $\overline{\text{PTX}}$ signal line or the slave CPU are faulty.	● Check IC "4D" pins 5 and 3. ● Check output of IC "7C" pin 2 and "6B" pin 11 (RS-232C level).	● If IC "4D" pin 5 is not high, check output of IC "3F" pins 1 and 2 as well as of the main CPU "8G" pin 10 to replace faulty elements. ● Replace the faulty elements.
	Signals are sent normally but cause no proper action.	(1) The connecting unit or interface is faulty.	● Check the conductivity after confirming that the interface cables are connected properly.	● Replace the interface cables or connectors.
			● Replace the connecting unit and confirm if it operates properly.	● Replace the unit.
Data cannot be received.	Pin signal is not detected.	(1) Some of the elements for the PIN signal line are faulty.	● Check IC "6C" pins 8(9) and 10. If output of the pin 8 is always low, also check conductivity of the zener diode ZD4.	● Replace the faulty elements.
		(2) The main CPU is faulty.	● Check the main CPU "8G" pin 19 to see if it is low.	● If the pin is low, replace the main CPU.
		(3) The connecting unit or interface is faulty.	● Check the conductivity after confirming that the interface cables are connected properly.	● Replace the interface cable or connectors.
			● Replace the connecting unit, or check if the pin signal is generated on the connecting unit side.	● Replace the connecting unit.
	$\overline{\text{PRX}}$ signal is not detected.	(1) The connecting unit or interface is faulty.	● See above.	

Nature of Trouble	Condition of Trouble	Possible Cause	Check Point	Remedy
		(2) The element of $\overline{PRX}$ signal line or the main CPU is faulty.	● Check IC "6C" pin 5(6) ····· RS-232C level and pin 4 to confirm that the signal is reversed. ● If IC "6C" pin 5 (6) is always kept on low level (grand), check the conductivity of Zener diode ZD5. ● Check IC 4D pin 5, 8 (11).	● Replace IC "6C" pin. ● Replace Zenner diode. ● If IC "4C" pin 5 is always kept on low level, replace the main CPU "8G". If pin 8 output is not obtained, replace IC "4D".

8.4.8 ROM Cartridge

Nature of Trouble	Condition of Trouble	Possible Cause	Check Point	Remedy
No data can be read out from the ROM cartrifge.	No READ operation can be performed (including the header section).	(1) The ROM cartridge is faulty.	● Replace the ROM cartridge and see if normal operation is available.	
		(2) Either the connecting cable or the connectors are faulty.	● Check conductivity of the cable set No. 701 which is led into the cartridge connector and the connector CN8 of the MOSU circuit board.	● Redo connection of the cable set No. 701 or replace it.
		(3) The ROM cartridge judgement signals do not function properly.	● Check the slave CPU "6D" pin 23 and IC "2F" pin 11 to see if they are low. Also check that the slave CPU "6D" pin 2 is low.	● Replace IC "2F" or the slave CPU "6D", whichever is appropriate.
		(4) No power is supplied to the ROM cartridge.	● Check the slave CPU "6D" pin 26 to see if it is high.	● Replace the slave CPU "6D".
		(5) The control signals (for clock, data, lines etc.) do not work properly.	● Check the slave CPU "6D" pins 25 and 27 to see if they are turned for once. ····· Clear signal. ● Check if the main CPU "8G" pin 20 and IC "9G" pins 6 and 15 are provided with pulses.	● Replace the faulty slave and/or main CPUs.

8.4.9 Microcassette

Nature of Trouble	Condition of Trouble	Possible Cause	Check Point	Remedy
The system does not work at all or works abnormally.	The system does not function at all. (The reel motor, the R/W head and other sections do not work at all.)	(1) The micro-cassette is faulty.	● Replace the micro-cassette and see if normal function can be obtained.	
		(2) The connection cables or the connectors are faulty.	● Check conductivity of the cable set No. 701 which is led into the cartridge connector and the connector CN8 of the MOSU substrate. Also check connection of CN8.	● Redo connection of the cable set No. 701 or replace it.
		(3) No power is supplied to the micro-cassette.	● Check the main CPU "8G" pin 20 to see that it is high and then check the slave CPU "6D" pin 27 to see that it is also high.	● Replace the slave or main CPU, whichever is appropriate.
	The reel motor and the R/W head do abnormal movements.	(1) The command signals are faulty.	● Check the slave CPU "6D" pins 25 and 26.	● Replace the slave CPU.
		(2) Power would not turned off.	● Check the slave CPU "6D" pin 27 to see if it remains low until the transmission of the commands is over.	● Replace the slave CPU.
	The tape counter does not function properly.	(1) The main CPU is faulty.	● Check if the main CPU "8G" pin 29 has pulse output when the tape is being wound up.	● Replace the main CPU.
	Data on the tape are destructed or the system can not write data on the tape.	(1) The slave CPU is faulty.	● Check output of the slave CPU "6A" pin 9. (WRITE data).	● If the pin remains low all the time, replace the slave CPU.
		(2) The R/W head shows abnormal movement.	● Check the slave CPU "6D" pin 23 to see if it is high at the time of READ or WRITE operation.	● If the pin is low, adjust or replace the head switch (HSW) of the micro-cassette. ● If the pin is high, replace the slave CPU.
		(3) The R/W head is faulty.	● Check the R/W head for any dirt or scars.	● Clean the R/W head or replace the P lever set.
No READ and WRITE operation can be performed.	The tape can not be moved.	(1) The cassette is improperly set.	● Check the cassette tape to see if it is damaged. ● Turn the tape upside down and set it once again.	● Replace the cassette.

Nature of Trouble	Condition of Trouble	Possible Cause	Check Point	Remedy
		(2) The C axle (the capstan axle) is not turning.	● Check the belt drive motor to see if it is turning.	● Replace the motor.
			● Check the drive belt to see if it is cut or displaced.	● Replace the belt or set it properly.
		(3) The pinch roller is not in proper contact with the C axle.	● Check if the PR spring of the pinch roller is not broken. Also check if the tension of the pinch roller is found somewhere within the range of 150 ± 20g.	● Replace the pinch roller or the PR spring, whichever is appropriate.
			● Check if the R/W head scrape head can be turned to move the pinch roller.	● Replace the cum gear set (the head drive motor).
		(4) The C axle or the belt is faulty.	● Check the axle to see if it turns heavily.	● Replace the C axle.
			● Measure the winding torque of the axle using a torque cassette. (Standard value is 7 ± 2g.)	● Replace the C axle or the belt, whichever is appropriate.
	The head is not outstanding.	(1) Maladjustment of the HP switches.	● Check if the HP switches are located at a interval of 0.35 mm.	● Readjust the HP switches or replace them.
		(2) Some foreigh objects are found between the P lever set and the frame.	● Check around the R/W head and the return coil of the P lever set.	● Remove the foreign objects.
	The tape runs correctly and is properly in touch with the R/W head.	(1) The READ/WRITE head is faulty or the head AZIMUTH is not properly adjusted.	● Check the soldering or the wires connected with the head.	● Redo the soldering or replace the P lever set (with the R/W head).
			● Check the replay wave forms using a 3 kHz test tape (AZIMUTH).	● Replace the P lever set unless the test shows no replay wave forms or sine curve wave forms.
			● Also check frequency (speed) of 3 kHz. (If variance of frequency is too large, replace the belt, the C axle, the idler and the motor in this order.0	● When sine curve wave forms are reproduced, turn the AZIMUTH to attain a peak gain.
No WRITE operation can be performed.	No WRITE operation can be performed while the tape is running.	(1) The PE switch is faulty.	● Check the PE switch to see if it is not short-circuited. (Also check the connection between the frames.)	● Readjust the PE switch, and clean or replace it.

Nature of Trouble	Condition of Trouble	Possible Cause	Check Point	Remedy
			● Check the PE switch to see if it is properly adjusted.	
		(2) The P lever set (R/W head) is faulty.	● Check the R/W head to see if it has dirt on it or it is damaged.	● Clean or replace the P lever set.
		(3) The cassette is faulty.	● Check if an anti-miss erasure notch is properly provided.	● If the notch is broken, replace the cassette.
The tape stops running on during operation or runs very slowly.	R/W errors occur frequently.	(1) The cassette is defective.	● The tape has scars or dirt on it.	● Replace the cassette.
		(2) The torque is too small.	● Measure the torque using a torque check tape. (Specified value 7g ± 2g)	● Replace 1. the belt, 2. the C axle, 3. idler and 4. the motor in the said order.
		(3) The speed control circuit does not function properly.	● Check VR1 of the motor control circuit to see if 400 Hz pulses are properly adjusted. ● Check output of IC1 pin9 (S.T.B.).	● Adjust VR1 or replace IC1. ● Replace the transistor Q19 or Q9, whichever is appropriate.

8.4.10 RAM

Nature of Trouble	Condition of Trouble	Possible Cause	Check Point	Remedy
RAM errors.	Sometimes data are altered and READ/WRITE can not be performed.	(1) Abnormal voltage is provided to the circuit elements.	● Examine the voltage by using the collector of the transistor Q7. (The voltage is normally +V5 in a power-on condition.	● Replace the transistor Q7 if the voltage is too low.
		(2) Some of the RAM elements do not function porperly.	● Check error addresses. (Error addresses can be output by using an error program.)	● Pinspot the defective IC by using the following table.
		(3) Some of the RAM select signals do not function properly.	● Check IC "16A" pins 7 to 15 to see if low level outputs are present.	

Address	Corresponding IC	Select signal
0000 ~ 07FF	12G	16D – 7
0800 ~ 0FFF	13G	16D – 9
1000 ~ 17FF	14G	16D – 10
1800 ~ 1FFF	15G	16D – 11
2000 ~ 27FF	16C	16D – 12
2800 ~ 2FFF	15C	16D – 13
3000 ~ 37FF	14C	16D – 14
3800 ~ 3FFF	13C	16D – 15

Nature of Trouble	Condition of Trouble	Possible Cause	Check Point	Remedy
	The READ/WRITE function is completely out of order.	(1) No. R/W signal is available.	● Check IC "5D" pin 11 for a pulse output. If no pulse output is detected, check "5D" pins12 and 13.	● If no pulse output is detected at IC "5D" pin 12, check IC "3F" pin 5 and the main CPU "8G" pin 38. If no pulse output is detected at "8G" pin 38, replace the main CPU. ● If IC "5D" pin 13 does not go high, check IC "8E" pins 1, 2 and 3 to find out what prevents the pin 3 from going high. (Malfunction of the chip circuit of IC "8E" or "9E" can be suspected.)
		(2) No CE1 signal is provided.	● Check IC "5D" pinsl, 2 and 3.	● If IC "5D" pin 2 is high, fix it following the above procedures. If no ENABLE signal (pulse) is present at the pin 1, replace the main CPU.
No back-up function is available for data in RAM.	When power is set off, all data stored in RAM are erased. (Power can not be turned on in some cases.)	(1) No normal voltage is provided to the back-up circuit.	● Check and see that the reset switch is not functioning. (Also make sure that base of the transistor Q10 and IC "7E" pin 16 are not low.)	● Replace the reset switch.
			● Check the emitter voltage of the transistor Q10 while power is off. (The normal voltage is approximately 3V)	● Replace either the transistor Q10 or the zener diode ZD3, whichever is appropriate.

8.4.11 External Cassette

Nature of Trouble	Condition of Trouble	Possible Cause	Check Point	Remedy
READ/WRITE operations can not be performed.	The motor for the cassette tape recorder does not function.	(1) The REMOTE control relay is faulty.	● Check connections and conditions of the cable for the tape recorder.	● Redo the connections.
			● Pull out the RMT plug on the cassette tape recorder and check conductivity of its pins 1 and 2.	● If the cable (No. 702) is faulty, replace it. (Normally the resistance should be around 5Ω.)
			● Check IC "7E" pin 14 to see if it is low. If it is high, check IC "8A" pin 5 to see if it is low.	● If IC "7E" pin 14 is low, replace the relay LAD1. ● If IC "8D" pin 5 is low, replace "8D" or "7E". ● If IC "8D" Pin 5 is high, replace the slave CPU "6D".
	The motor torque is reduced or the motor unduly stops its motion.	(2) Too much current flows to the RMT relay circuit.	● Pull out the RMT plug and see if the motor moves correctly.	● Keep the RMT plug in a pulled out condition if the tape recorder provides voltage for the motor by way of the RMT terminal.
		(3) An entangled magnetic tape adheres to the capstan axle.	● Check the tape drive section of the tape recorder to see if it has an entangled tape adhering to it.	● If a magnetic tape is adhering to the axle, replace the magnetic tape. Clean the axle before setting a new tape in position.
	No READ operation can be performed.	(1) No passage of signals at the cables and the connectors.	● Pull out the cables alternatively from the cassette tape recorder and HX-20 to check their conductivity.	● Replace the faulty cables or the cable connectors for the MOSU circuit board.
		(2) The tape recorder has a too low load level.	● Enhance the load level (as high as the level for recording) and reload.	
		(3) The tape recorder and the cassette tape are not matching in terms of tape speed and/or head inclination.	● Try to load under the same conditions as the machine was used for recording.	
		(4) Some of the elements for the READ circuit are faulty	● Check if 1kHz or 2 kHz pulses are provided to IC "8D" pin 10 (during loading a tape). ● Check the zener diode ZD6 to see if it is short-circuited.	● Replace IC "8D" if the zener diode is not short-circuited and no pulse signals are provided.

Nature of Trouble	Condition of Trouble	Possible Cause	Check Point	Remedy
	No READ operation can be performed.	(5) The slave CPU is faulty.	● Check the slave CPU "6D" pin 35 to see if pulses are provided.	● Replace the slave CPU if pulses are provided.
		(6) The capacitor for filtering or the diode D10 is faulty.	● Check IC "8D" pin 7 to see if signals are provided. ● Check the diode D10 to see if it is short-circuited or open.	● Replace the capacitor C36 if the diode is functional.
	No READ operation can be performed.	(1) The anti-miss erasure notch is broken.	● Check the notch of the cassette.	● Replace the magnetic tape cassette.
		(2) No signals are provided via the cables or the connectors.	● Pull out the cables alternatively from the tape recorder and HX-20 to check their conductivity.	● Replace the faulty cables or the cable connectors for the MOSU circuit board.
		(3) The magnetic tape is faulty.	● Check the tape to see if it has no dirt or scars on it.	
		(4) The load level of the tape recorder is too low.	● Raise the load level and try another WRITE operation.	● Verify the WRITE operation to see that a correct WRITE operation has been performed.
		(5) The slave CPU is faulty.	● Check the slave CPU "6D" pin 34 to see if 1 kHz or 2 kHz pulses are provided.	● Replace the slave CPU if no pulses are present.
		(6) Some of the elements of the WRITE circuit are faulty.	● Check the zener diode ZD2 to see if it is not short-circuited. ● Check the value (RK) of resistance of the resistor R9.	● Repalce the faulty elements.

APPENDIX

1. Basic Information on Circuitry

1.1 Table of Binary Code ..... A- 1
1.2 Transistors and Color Code ..... A- 2
1.3 Circuit Symbols ..... A- 3

2. ICs

2.1 Table of Main ICs ..... A- 6
2.2 ICs ..... A- 7

3. Serial-Parallel Conversion

3.1 Parallel to Serial Conversion A-22
3.2 Serial to Parallel Conversion A-22

4. Main Circuit Signals

4.1 Enable A-23
4.2 Address Strobe A-23
4.3 Address/Data Bus A-23
4.4 LCD Chip Select A-24
4.5 LCD Shift Clock (SCK) A-24
4.6 Clock Pulse for Clock A-24
4.7 KSC A-25
4.8 Key Input Control A-25
4.9 $\overline{\text{KB REQUEST}}$ A-25
4.10 Cassette Write Waveform A-26
4.11 Cassette Read Waveform A-26
4.12 Cassette Read Waveform A-26
4.13 Microcassette Read Waveform A-27
4.14 Microcassette Read Waveform A-27
4.15 Microcassette Tachogenerator Output A-27

1. Basic Information on Circuitry

1.1 Table of Binary code

		DECIMAL					
A 15	8	3	2	7	6	8	32 K
A 14	4	1	6	3	8	4	16 K
A 13	2		8	1	9	2	8 K
A 12	1		4	0	9	6	4 K
A 11	8		2	0	4	8	2 K
A 10	4		1	0	2	4	1 K
A 9	2			5	1	2	
A 8	1			2	5	6	
A 7	8			1	2	8	
A 6	4				6	4	
A 5	2				3	2	
A 4	1				1	6	
A 3	8					8	
A 2	4					4	
A 1	2					2	
A 0	1					1	

1000 ~ F000

100 ~ F00

10 ~ F0

0 ~ F

Decimal	HEX	(Bit) Binary	Decimal	HEX	(Bit) Binary	Decimal	HEX	(Bit) binary
0	0	0000	6	6	0110	12	C	1100
1	1	0001	7	7	0111	13	D	1101
2	2	0010	8	8	1000	14	E	1110
3	3	0011	9	9	1001	15	F	1111
4	4	0100	10	A	1010	16	10	10000
5	5	0101	11	B	1011	17	11	10001

1.2 Transistors and Color Code

(1) Transistors



PNP Transistor

Turned on when the base (B) is at low level.



NPN Transistor

Turned on when the base (B) is at high level.

(2) Color markings of resistors and capacitors

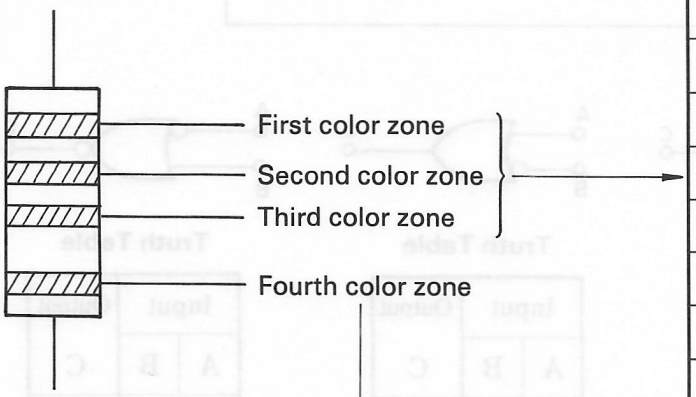

Color	Error
Gold	±5%
Silver	±10%
Non-colored	±20%

Color	First color zone	Second color zone	Third color zone
Black	0	0	10^0
Brown	1	1	10^1
Red	2	2	10^2
Orange	3	3	10^3
Yellow	4	4	10^4
Green	5	5	10^5
Blue	6	6	10^6
Purple	7	7	10^7
Grey	8	8	10^8
White	9	9	10^9
Gold	–	–	10^{-1}
Silver	–	–	10^{-2}

1.3 Circuit Symbols

(1) AND circuit (H: High level, L: Low level)

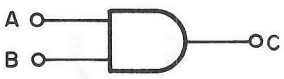

Truth Table

Input		Output
A	B	C
L	L	L
H	L	L
L	H	L
H	H	H



Truth Table

Input		Output
A	B	C
L	L	L
H	L	L
L	H	H
H	H	L

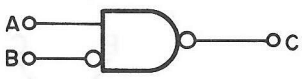

Truth Table

Input		Output
A	B	C
L	L	H
H	L	L
L	H	H
H	H	H

(Concept of AND Circuit)

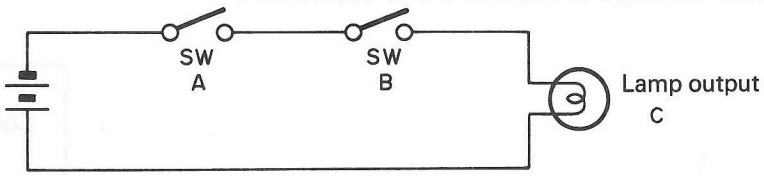

(2) OR circuit

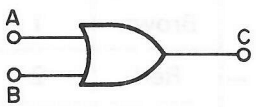

Truth Table

Input		Output
A	B	C
L	L	L
H	L	H
L	H	H
H	H	H

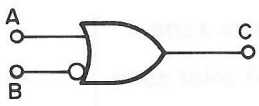

Truth Table

Input		Output
A	B	C
L	L	H
H	L	H
L	H	L
H	H	H

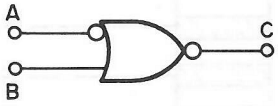

Truth Table

Input		Output
A	B	C
L	L	H
H	L	L
L	H	H
H	H	H

(Concept of OR Circuit)

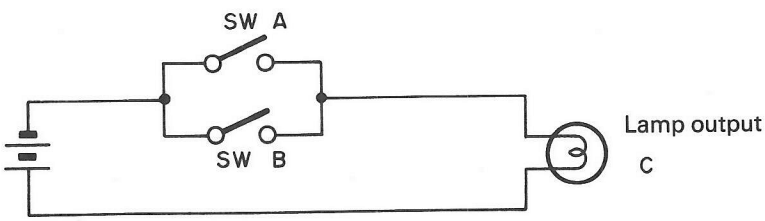

(3) Logics of AND circuit and OR circuit

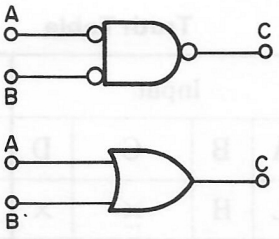

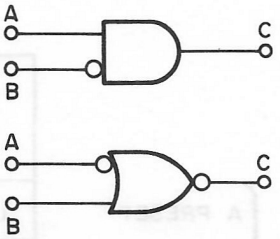

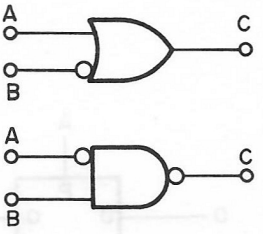

Truth Table

Input		Output
A	B	C
L	L	L
H	L	H
L	H	H
H	H	H

Truth Table

Input		Output
A	B	C
L	L	L
H	L	H
L	H	H
H	H	L

Truth Table

Input		Output
A	B	C
L	L	H
H	L	H
L	H	L
H	H	H

(4) Inverter circuit

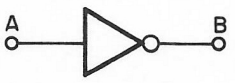

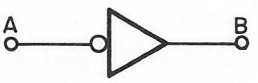

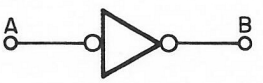

Input	Output
A	B
L	H
H	L

Input	Output
A	B
L	H
H	L

Input	Output
A	B
L	L
H	H

Note: The circle in the symbol indicates the open collector type.

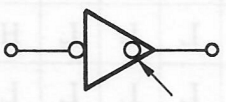

(5) Flip-flop

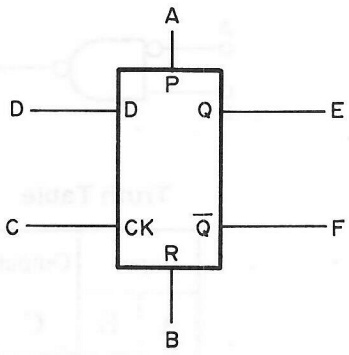

A PRESET
B CLEAR
C CLOCK
D DATA

Truth Table

	Input				Output	
	A	B	C	D	Q	$\overline{Q}$
1	L	H	×	×	H	L
2	H	L	×	×	L	H
3	L	L	×	×	H*	H*
4	H	H	L→H	H	H	L
5	H	H	L→H	L	L	H
6	H	H	L	H	H	L
7	H	H	L	L	L	H

* Temporary state

(6) Decoder

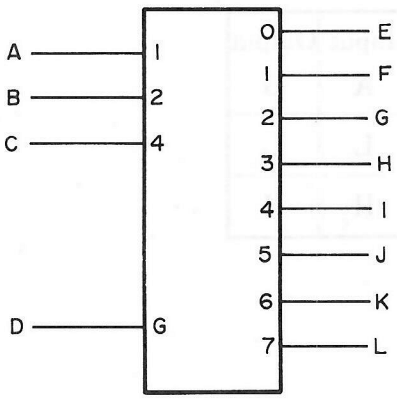

	Input				Output							
	A	B	C	D	E	F	G	H	I	J	K	L
1	—	—	—	L	L	L	L	L	L	L	L	L
2	L	L	L	H	H	L	L	L	L	L	L	L
3	H	L	L	H	L	H	L	L	L	L	L	L
4	L	H	L	H	L	L	H	L	L	L	L	L
5	H	H	L	H	L	L	L	H	L	L	L	L
6	L	L	H	H	L	L	L	L	H	L	L	L
7	H	L	H	H	L	L	L	L	L	H	L	L
8	L	H	H	H	L	L	L	L	L	L	H	L
9	H	H	H	H	L	L	L	L	L	L	L	H

2. IC

2.1 Table of Main ICs

Name	Part Code	Type	Location of Use
6301	X40006310	CPU (Main CPU)	8G
6301 (MASK)	Y201800301	CPU (Slave CPU)	6D
M16010C'	X400004491	RAM (2K byte)	13C ~ 16C, 12G ~ 15G
MB3761	X440167610	OP AMP	2B
TL497	X440034970	Switching voltage regulator	3A
TD62504	X440045040	Driver (Transistor array)	7E
HD75188	X440751880	Line driver (for RS-232C)	6B
HD75189	X440751890	Line receiver (for RS-232C)	7B
TC4016BP	X460401600	Two-way switch	2F, 4D
TC4049BP	X460404900	Converter	2C, 7C, 11H
TC4068BP	X460406800	8-input NAND	1G
TC4093BP	X460409300	2-input NAND	6C
TC4011UBP	X460401101	2-input NAND	5F
TC4049UBP	X460404902	Converter	7C, 8D
TC40H000	X460400004	2-input NAND	1E, 5D, 8E
TC40H002	X460400204	2-input NOR	1F, 3E, 4F
TC40H004	X460400404	HEX INVERTER	3F, 4E, 5E, 11G
TC40H010	X460401004	3-input NAND	2E
TC40H074	X460407404	Flip-flop	10H
TC40H138	X460413804	Decoder	9E, 15D, 16D, 16G
TC40H166	X460416604	Shift register	10G
TC40H273	X460427304	Flip-flop	5G, 9G
TC40H367	X460436704	3-input buffer	3G, 4G
TC40H373	X460437304	Latch	16E
TD6303F	X440043030	Motor control	Microcassette IC1

2.2 ICs

(1) 6301

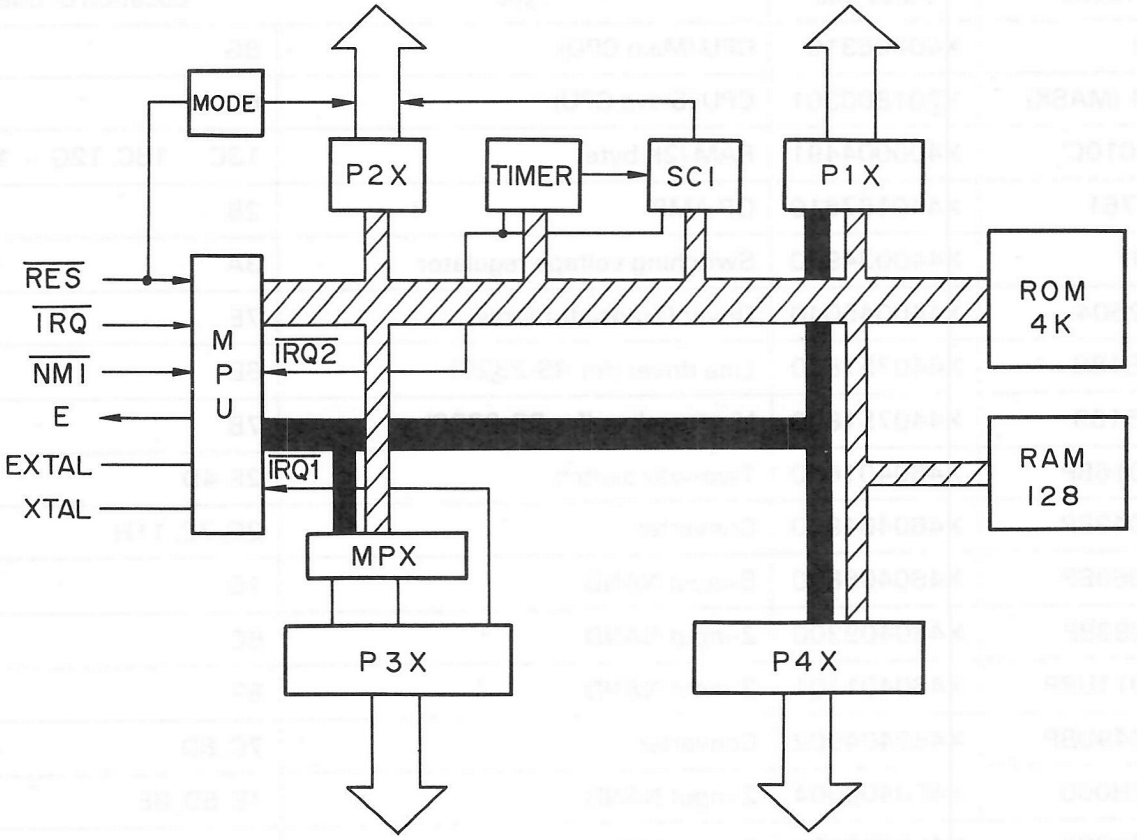

The HX-20 employs a 2.4576 MHz crystal oscillator, whose output frequency is divided into one quarter by an internal circuit, i.e., 614.4 kHz (about every 1.63 μsec.), which drives the HX-20.

The main CPU operates in the expanded multiplex mode, while the slave CPU operates in the single chip mode. Thus, the ports are used as shown below.

Port	Main CPU	Slave CPU
Port 1	Parallel I/O terminal	I/O terminal
Port 2	Serial I/O terminal	I/O terminal
Port 3	Address/data terminal	I/O terminal
Port 4	Address terminal	I/O terminal

Main CPU6301 (8G)

Pin No.	Port	Direction	Meaning	
1	G	———	GND	
2	X TAL	In	Oscillator input 2.4576 MHz	
3	EX TAL	In	Oscillator input 2.4576 MHz	
4	NMI	In	Non-mask interrupt	Low: Interrupt
5	IRQ	In	I/O request	Low: On
6	RS	In	Reset signal	
7	S.T.B.	–	Unused	
8	20	In	Bar code reader data line	
9	21	Out	RS232C TX (transmitting data)	
10	22	Out	Serial select	Low: Peripheral High: Slave 63d
11	23	In	Slave 6301 serial (RX)	
12	24	Out	Slave 6301 serial (TX)	
13	10	In	Data set ready (DSR)	Low: On
14	11	In	Clear to send (CTS)	Low: On
15	12	Out	Slave CPU R/W control	
16	13	In	External port interrupt	Low: Interrupt
17	14	In	Power abnormal ($\overline{PWA}$) (IRQ1)	Low: Interrupt
18	15	In	Keyboard interrupt (IRQ1)	Low: Interrupt
19	16	In	Peripheral status (Serial option)	Low: On
20	17	In	Cartridge option flag	Low: ROM High: μCASSETTE

Main CPU 6301 (8G)

Pin No.	Port	Direction	Meaning
21	Vcc		+5V
22	A15	Out	Address bus
23	A14	Out	
24	A13	Out	
25	A12	Out	
26	A11	Out	
27	A10	Out	
28	A9	Out	
29	A8	Out	
30	DA7	In/Out	Data address bus
31	DA6	In/Out	
32	DA5	In/Out	
33	DA4	In/Out	
34	DA3	In/Out	
35	DA2	In/Out	
36	DA1	In/Out	
37	DA0	In/Out	
38	R/$\overline{W}$	Out	Read/write
39	AS	Out	Address strobe
40	E	Out	ENABLE

Slave CPU 6301 (6D)

Pin No.	Port	Direction	Meaning
1	G	–	GND
2	X TAL	In	Oscillator input 2.4576 (MHz)
3	EX TAL	In	Oscillator input 2.4576 (MHz)
4	NM1	In	Non-mask interrupt Low: ON
5	IRQ	–	Unused
6	$\overline{R}$	In	Request signal
7	STB	–	Unused
8	20	In	RS-232C (RX) receiving data / Microcassette — LOW: READ DATA, HIGH: WRITE ENABLE
9	21	Out	Microcassette internal clock / Write data
10	22	In	Serial select — LOW: BRAKE, HIGH: NORMAL
11	23	In	Serial data (RX)
12	24	Out	Serial data (TX)
13	10	Out	Printer head 1 — LOW: OFF, HIGH: ON
14	11	Out	Printer head 2
15	12	Out	Printer head 3
16	13	Out	Printer head 4
17	14	Out	Printer Motor — LOW: ON, HIGH: OFF
18	15	Out	Speaker — LOW: OFF, HIGH: ON
19	16	In	Printer reset pulse
20	17	In	Printer timing pulse

Slave CPU 6301 (6D)

Pin No.	Port	Direction	Meaning
21	Vcc	–	+5V
22	47	In	Carrier detect Low: Carrier detected High: Not detected
23	46	Out	Rom cartridge select Microcassette clock Low: Counter High: Head switch
24	45	Out	Cassette/RS-232C select Low: RS232-C High: Microcassette
25	44	Out	ROM address counter clear Clock
26	43	Out	ROM cartridge power switch Low: Off High: On Microcassette command
27	42		Clear shift register Microcassette power switch Low: Off High: On
28	41	Out	Port enable always on Printer motor control Low: Open High: Brake
29	40	In	PLUG 2
30	37	Out	Program power on/off LOW: Off High: On
31	36	Out	RS-232 power on Low: Off High: On
32	35	Out	Bar code on/off Low: On High: Off
33	34	Out	Slave status flag
34	33	Out	External cassette write data
35	32	In	External cassette read data
36	31	Out	Request to send (RTS)
37	30	Out	External cassette remote on/off Low: On High: Off
38	–	–	Unused
39	SC1	–	Unused
40	–	–	Unused

(2) MB 3761

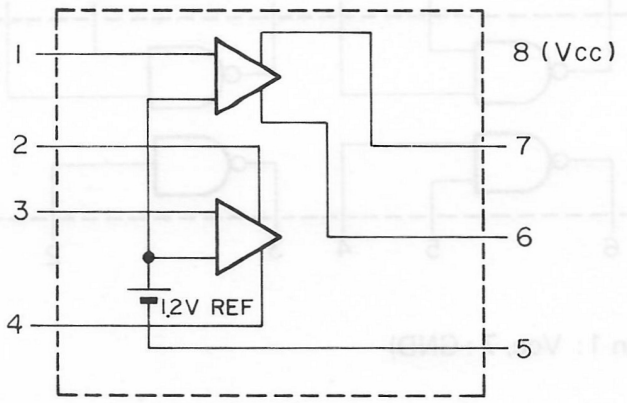

(3) TL 497

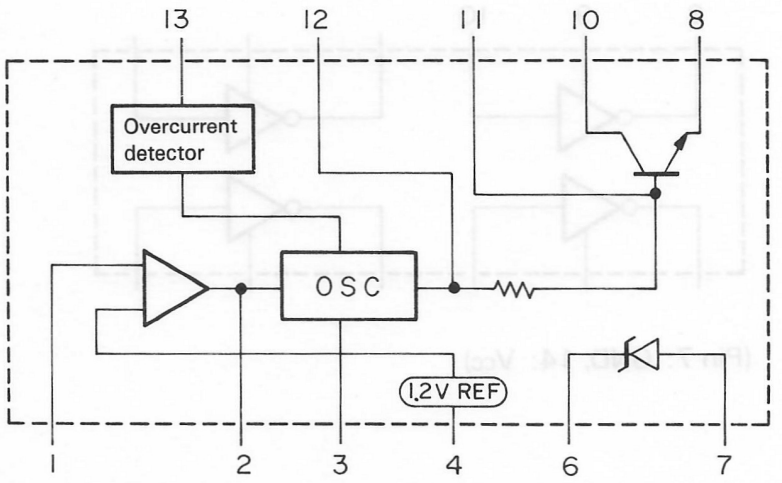

(4) TD 62504

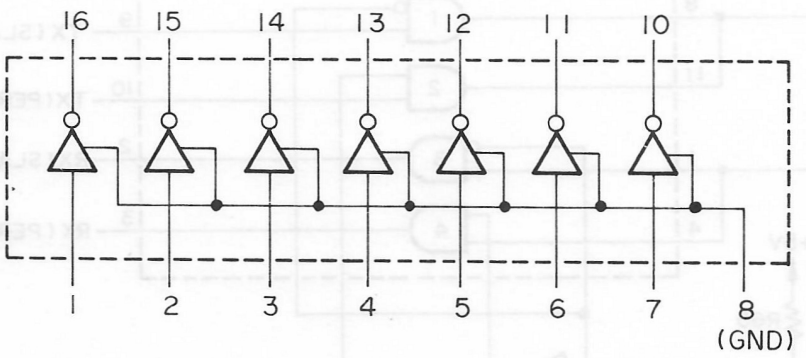

(Pin 9: Not used)

(5) 75188

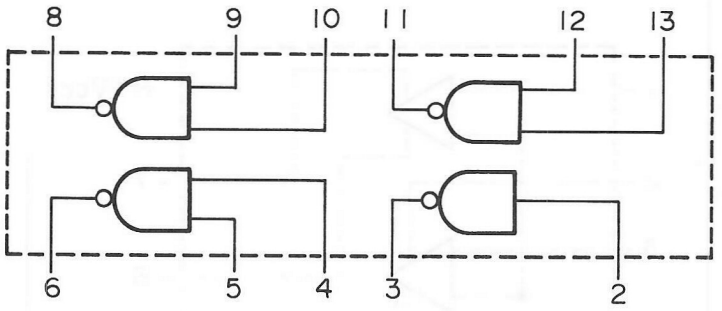

(Pin 1: Vcc, 7 : GND)

(6) 75189

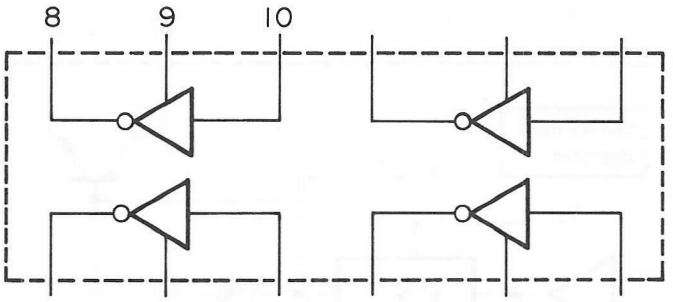

(Pin 7: GND, 14: Vcc)

(7) TC 4016

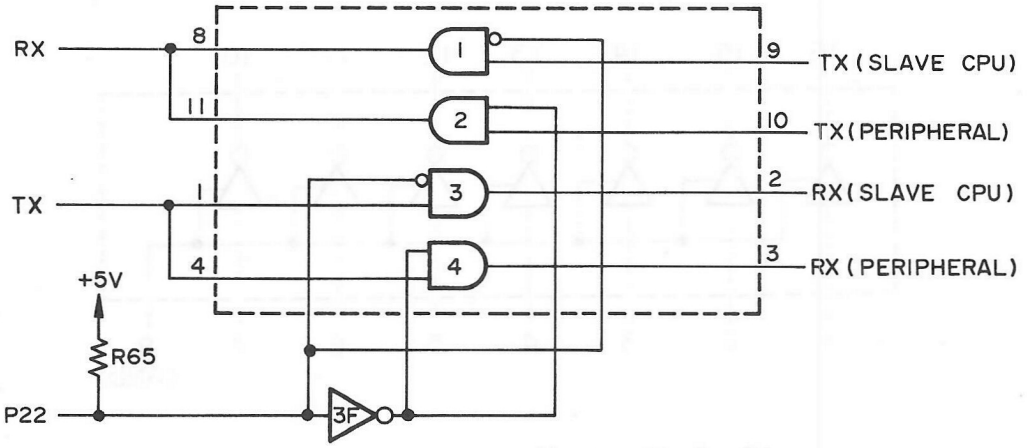

(8) 4049

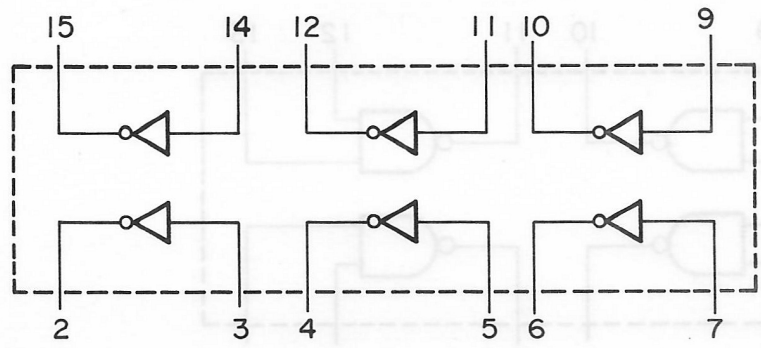

(Pin 8: GND, 1 : Vcc, 13/16 Unused)

(9) 4068

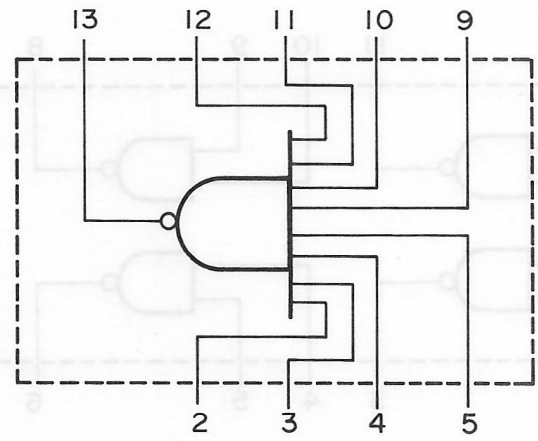

(Pin 7: GND, 14: Vcc, 1/6/8: Unused)

(10) 4093

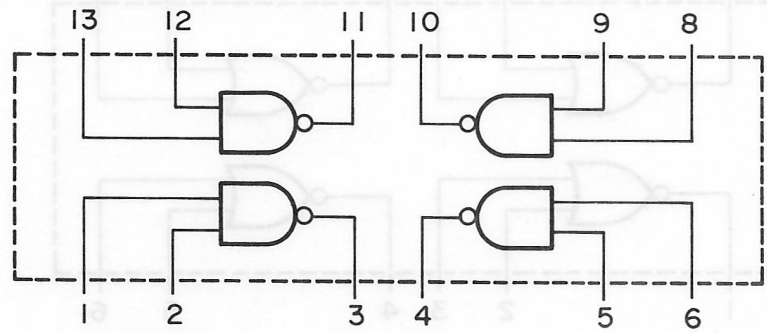

(11) TC 4011BP

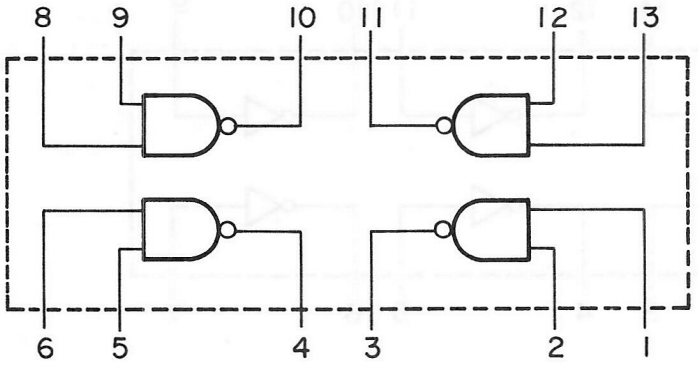

(Pin 7: Vss, 14: V_{DD})

(12) 40H000P

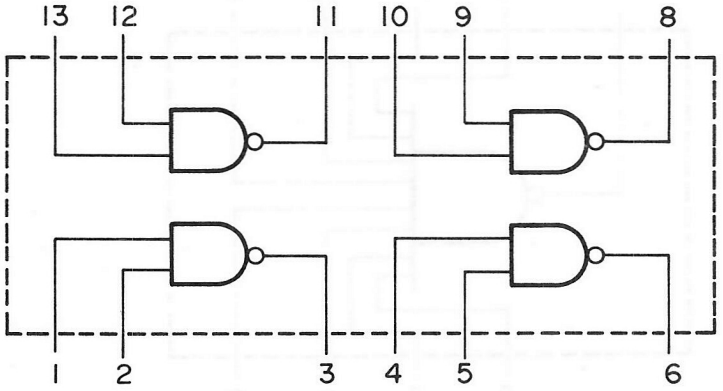

(Pin 7: GND, 14 : V_{DD})

(13) 40H002P

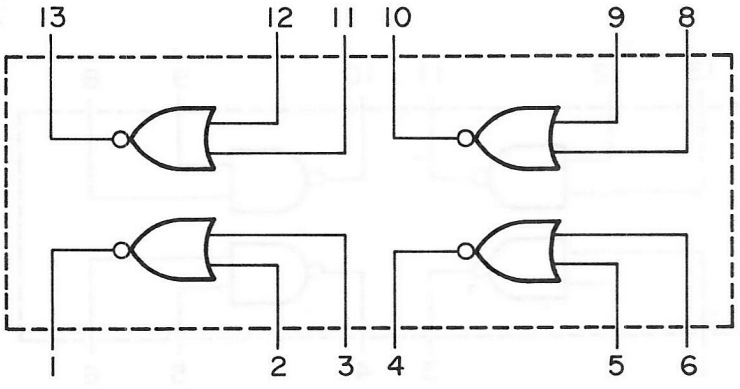

(Pin 7: GND, 14: V_{DD})

(14) 40H004P

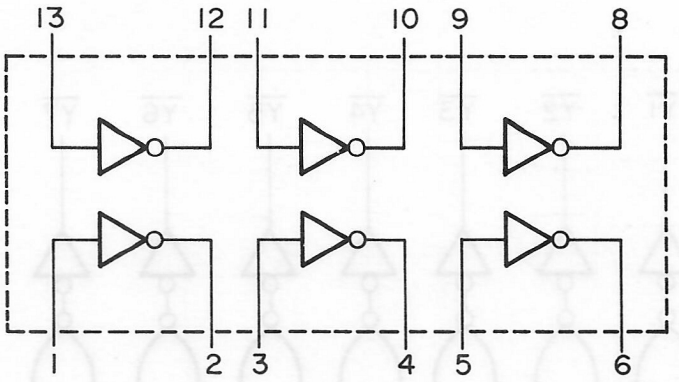

(Pin 7: GND, 14: V_{DD})

(15) 40H010P

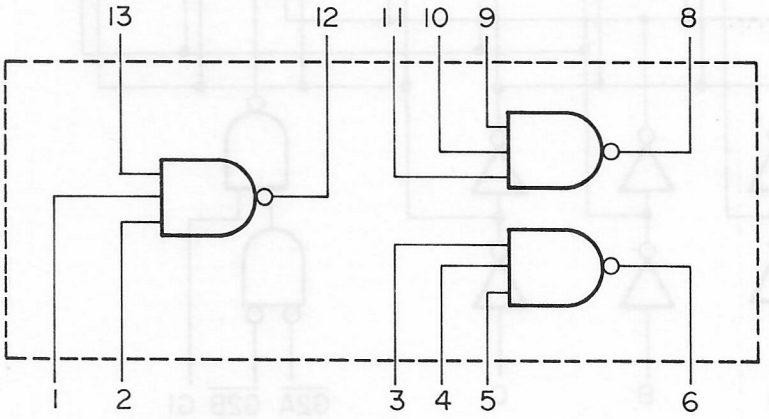

(Pin 7: GND, 14 : V_{DD})

(16) 40H074P

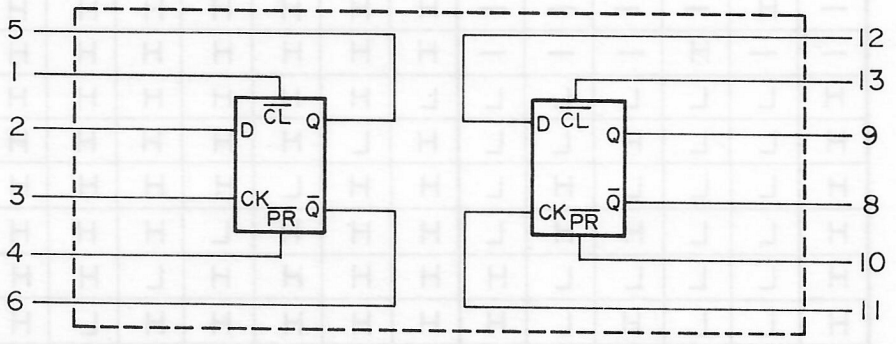

(D MODE) . . . . . $\overline{CL}$ and $\overline{PR}$ at high level

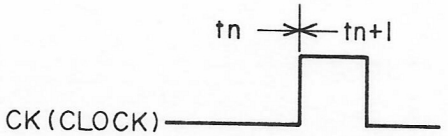

tn	tn+1 Output	
D	$\overline{Q}$	Q
H	L	H
L	H	L

(17) 40H138

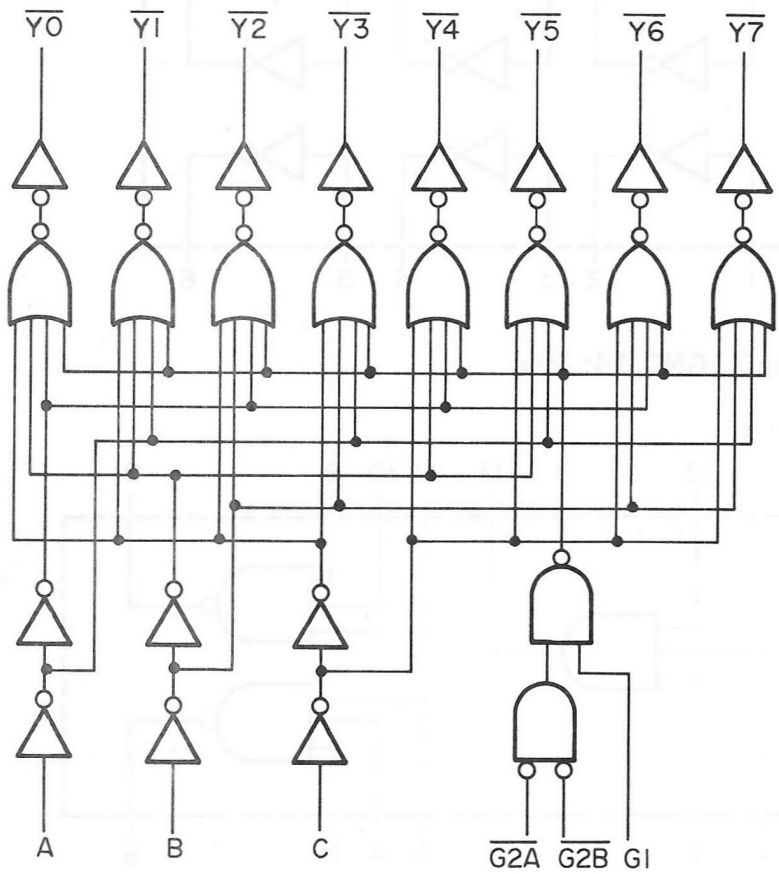

Input						Output							
Gate													
G1	$\overline{G2A}$	$\overline{G2B}$	A	B	C	Y0	Y1	Y2	Y3	Y4	Y5	Y6	Y7
L	—	—	—	—	—	H	H	H	H	H	H	H	H
—	H	—	—	—	—	H	H	H	H	H	H	H	H
—	—	H	—	—	—	H	H	H	H	H	H	H	H
H	L	L	L	L	L	L	H	H	H	H	H	H	H
H	L	L	H	L	L	H	L	H	H	H	H	H	H
H	L	L	L	H	L	H	H	L	H	H	H	H	H
H	L	L	H	H	L	H	H	H	L	H	H	H	H
H	L	L	L	L	H	H	H	H	H	L	H	H	H
H	L	L	H	L	H	H	H	H	H	H	L	H	H
H	L	L	L	H	H	H	H	H	H	H	H	L	H
H	L	L	H	H	H	H	H	H	H	H	H	H	L

(18) 40H166

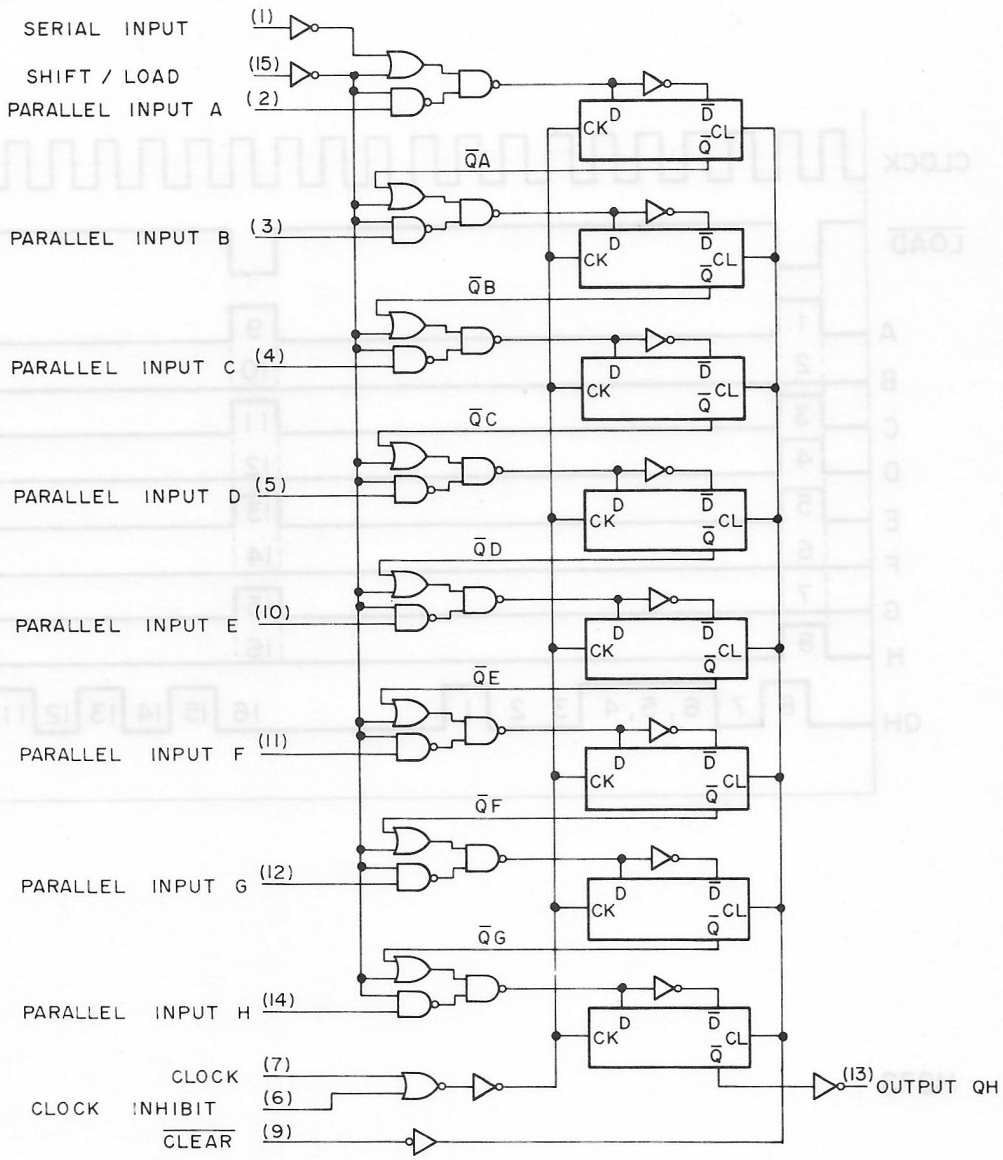

INPUTS							OUTPUTS			FUNCTION MODE
$\overline{CLEAR}$	SHIFT/ LOAD	CLOCK INHIBIT	CLOCK	SERIAL INPUT	PARALLEL INPUT A	PARALLEL INPUT H	INTERNAL Q A	INTERNAL Q B	Q H	
L	※	※	※	※	※	※	L	L	L	Clear
H	H	L	↑	L	※	※	L	Q_{An}	Q_{Gn}	Shift
H	H	L	↑	H	※	※	H	Q_{An}	Q_{Gn}	
H	L	L	↑	※	L	L	L	P_{INB}	L	Parallel Load
H	L	L	↑	※	L	H	L	P_{INB}	H	
H	L	L	↑	※	H	L	H	P_{INB}	L	
H	L	L	↑	※	H	H	H	P_{INB}	H	
H	※	H	※	※	※	※	Q_{AO}	Q_{BO}	Q_{HO}	Hold
H	※	※	↓	※	※	※	Q_{AO}	Q_{BO}	Q_{HO}	No change

(19) 40H166

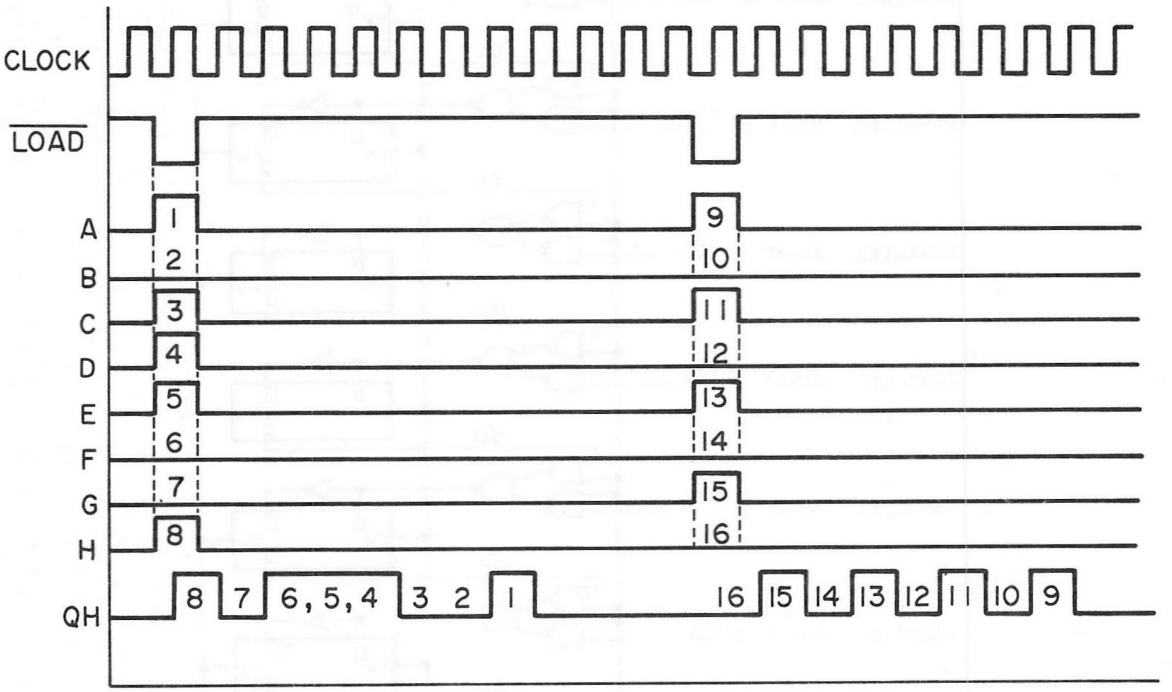

H273

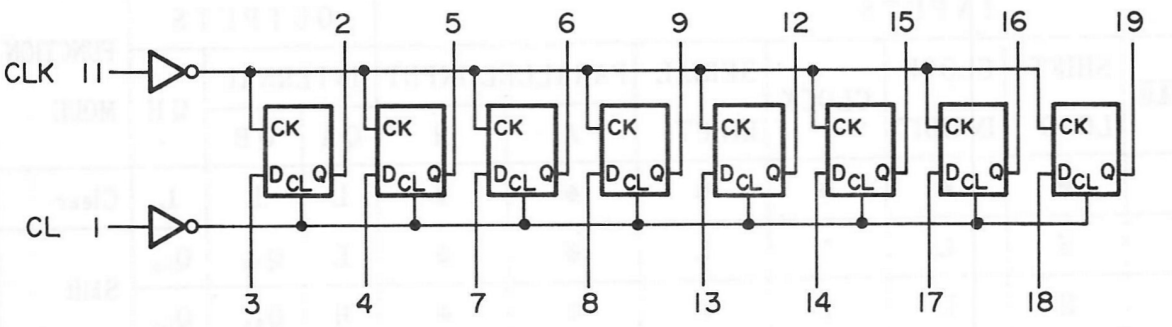

(Pin 10: Vss, 20: V_{DD})

(20) 40H367

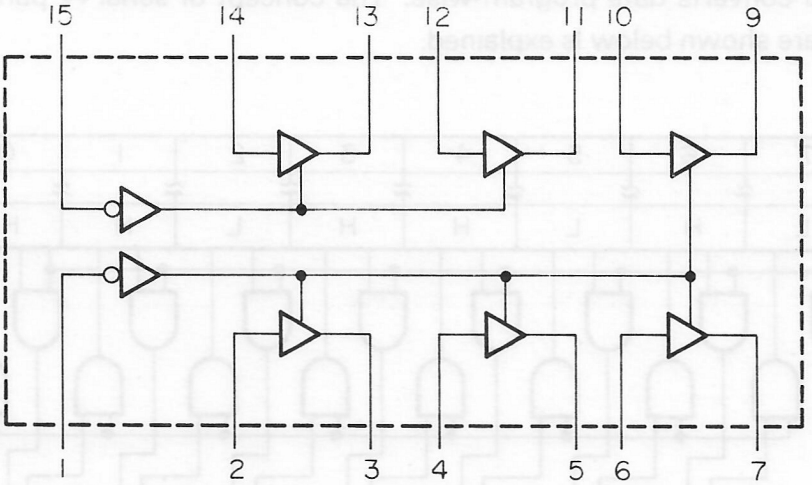

(Pin 8: GND, 16: V_{DD})

H373

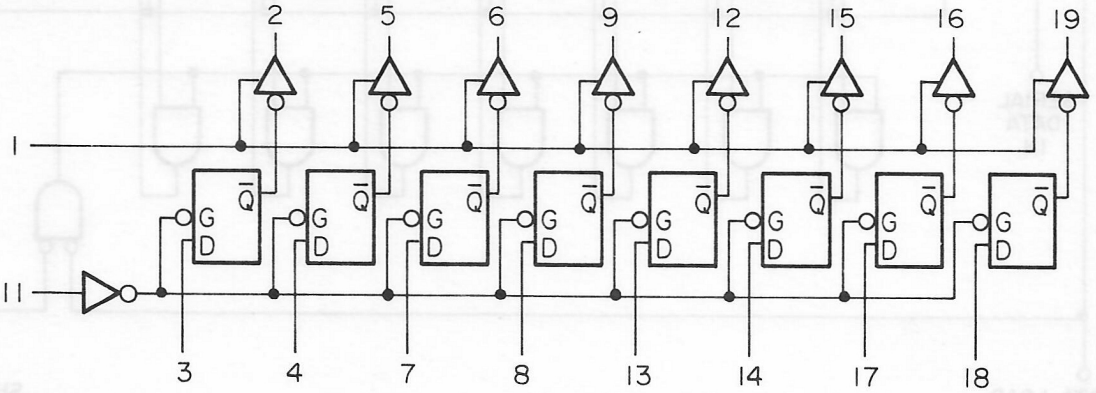

(Pin 10: V_{SS}, 20: V_{DD})

(21) TD6303F

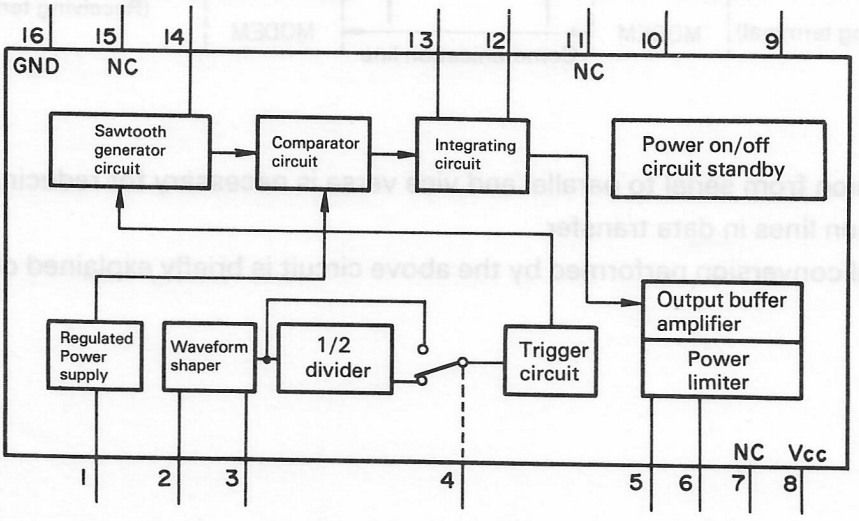

3. Serial – Parallel Conversion

The HX-20 converts data program-wise. The concept of serial ↔ parallel conversion using the hardware shown below is explained.

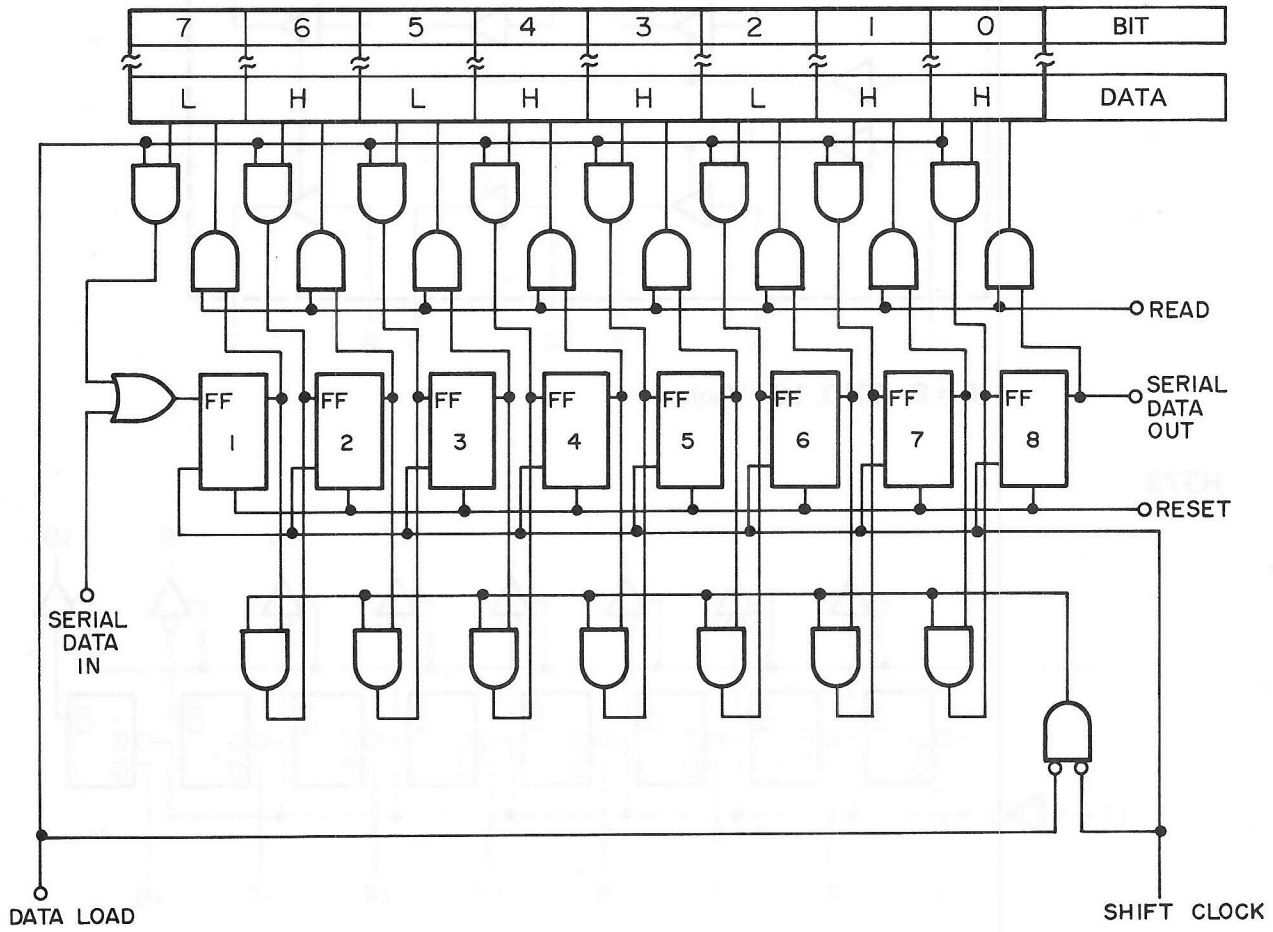

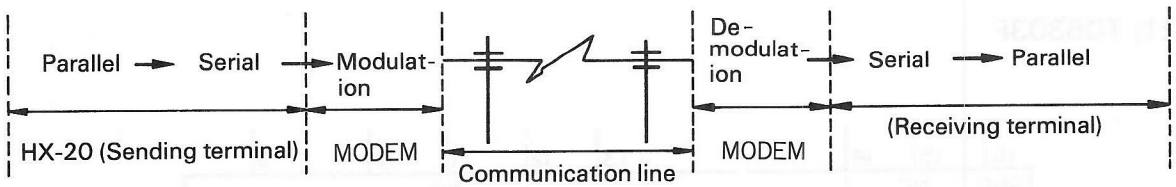

Data conversion from serial to parallel and vice versa is necessary for reducing the number of communication lines in data transfer.
Serial-parallel conversion performed by the above circuit is briefly explained on the next page. page.

3.1 Parallel to Serial Conversion (Add start and stop bits.)

After the flip-flop circuit is reset by a reset signal, parallel data is read into FF '1' to FF '8' by a data load signal.

Then, the data is shifted bit by bit at the timing of NOT DATA LOAD and SHIFT CLOCK, and these bits are output to SERIAL DATA OUT. In performing this operation, it is necessary to add a start bit and a stop bit to the data.

3.2 Serial to Parallel Conversion

After resetting the flip-flop with a reset signal, the serial data bits coming from SERIAL DATA IN are set into FF '1', and are shifted bit by bit at the SHIFT CLOCK timing.

After shifting 1 byte of data bits, the bits are read out to the parallel data line by a read signal. In this conversion operation, the start bit and stop bit are separated from the data.

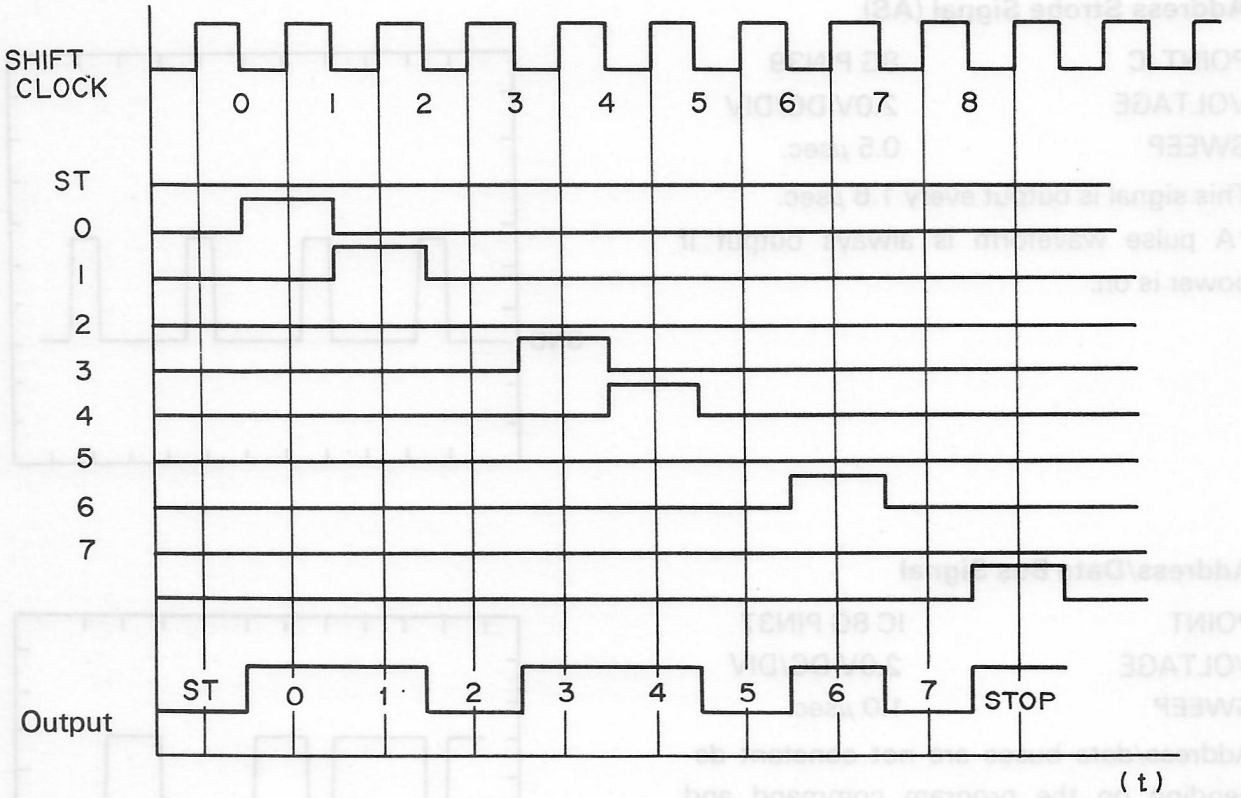

(Serial conversion)

4. Main Circuit Signals

4.1 Enable Signal (E)

POINT	IC 8G PIN 40
VOLTAGE	2.0V DC/DIV
SWEEP	0.5 μsec.

A system clock with a period of 1.6 μsec

*A pulse waveform is always output if power is on.

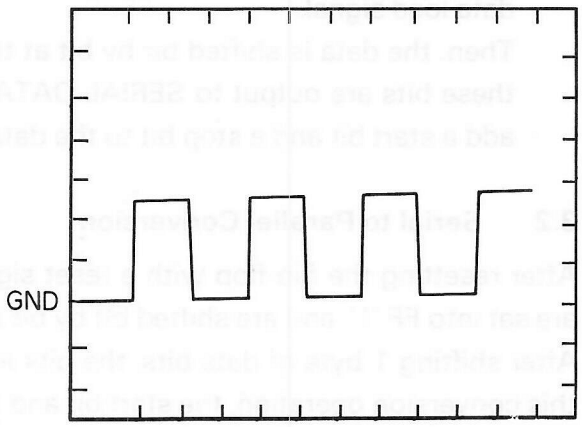

4.2 Address Strobe Signal (AS)

POINT IC	8G PIN39
VOLTAGE	2.0V DC/DIV
SWEEP	0.5 μsec.

This signal is output every 1.6 μsec.

*A pulse waveform is always output if power is on.

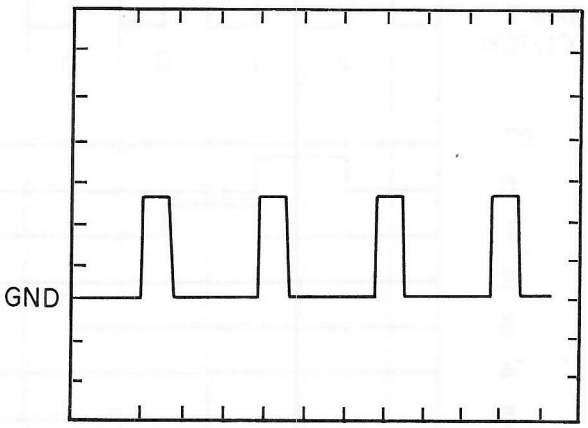

4.3 Address/Data Bus Signal

POINT	IC 8G PIN37
VOLTAGE	2.0V DC/DIV
SWEEP	1.0 μsec.

Address/data buses are not constant depending on the program command and data being executed.

* Normally high level

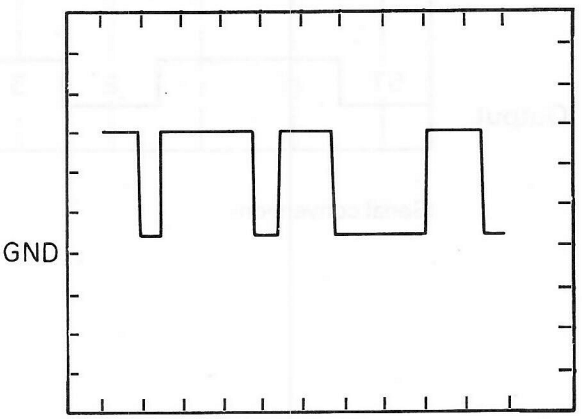

4.4 LCD Chip Select Signal (CS)

POINT	IC 16G PIN 14
VOLTAGE	2.0V DC/DIV
SWEEP	2.0 μsec

*Normally high level

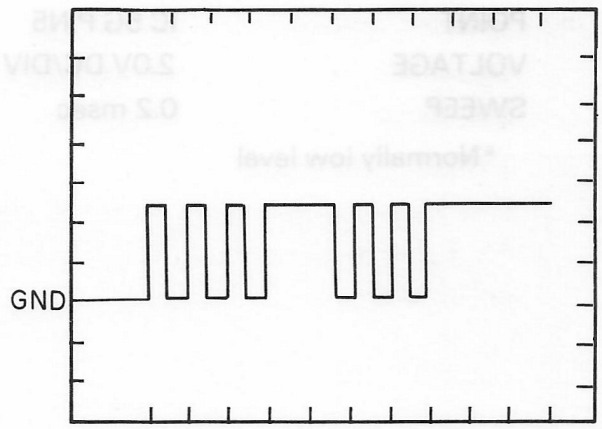

4.5 LCD Shift Clock Signal (SCK)

POINT	IC 11H PIN2
VOLTAGE	2.0V DC/DIV
SWEEP	2.0 μsec.

*Normally high level

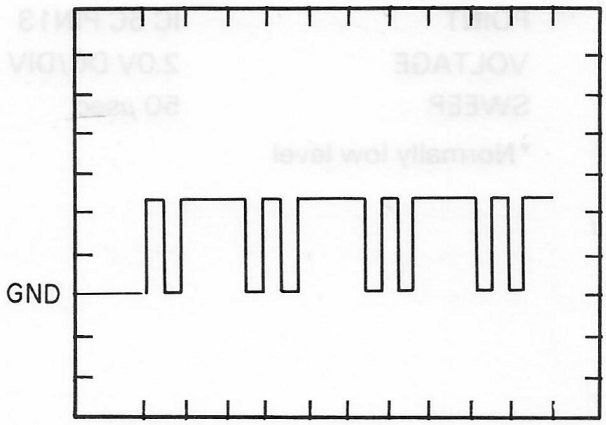

4.6 Clock Pulse for Clock

POINT	IC 6G PIN2
VOLTAGE	2.0V DC/DIV
SWEEP	10 μsec.

*Normally a pulse waveform

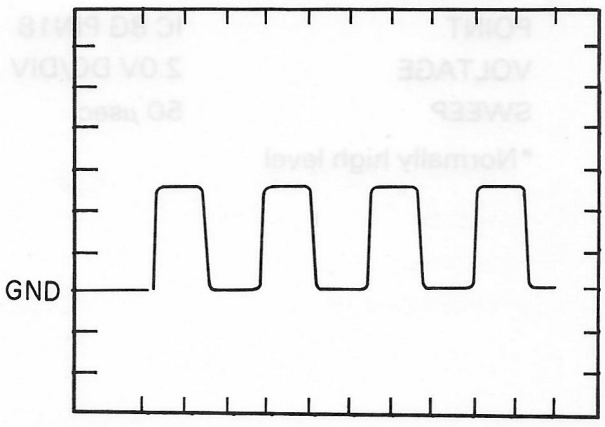

4.7 KSC Signal

POINT	IC 5G PIN5
VOLTAGE	2.0V DC/DIV
SWEEP	0.2 msec

*Normally low level

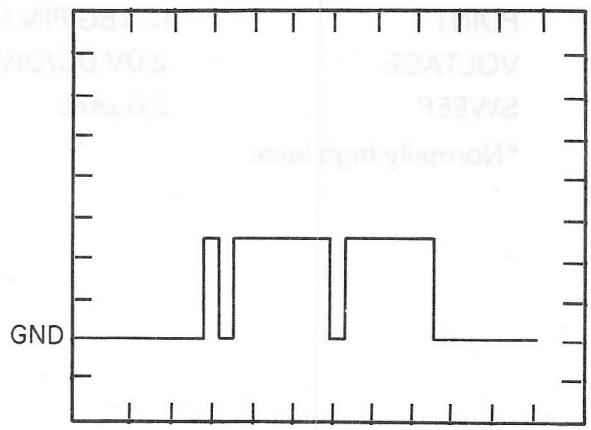

4.8 Key Input Control Signal

POINT	IC 6C PIN13
VOLTAGE	2.0V DC/DIV
SWEEP	50 μsec.

*Normally low level

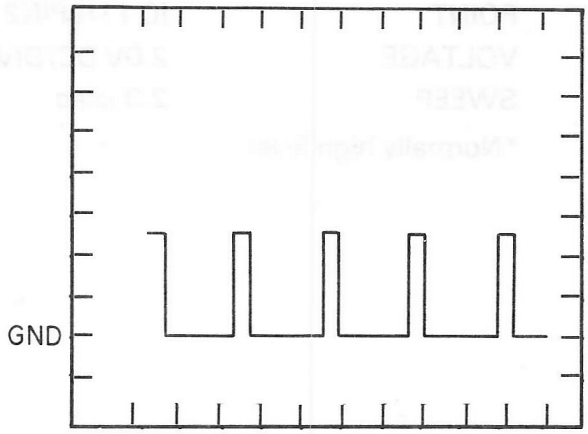

4.9 $\overline{\text{KB REQUEST}}$ Signal

POINT	IC 8G PIN18
VOLTAGE	2.0V DC/DIV
SWEEP	50 μsec.

*Normally high level

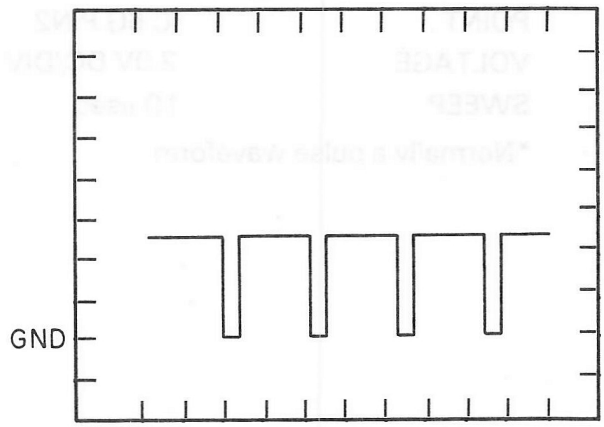

4.10 Cassette Write Waveform Slave Output

POINT	IC 6D PIN 33
VOLTAGE	2.0V DC/DIV
SWEEP	0.5 msec

Bit on where pulse is wide; bit off where pulse is narrow

*Normally low level

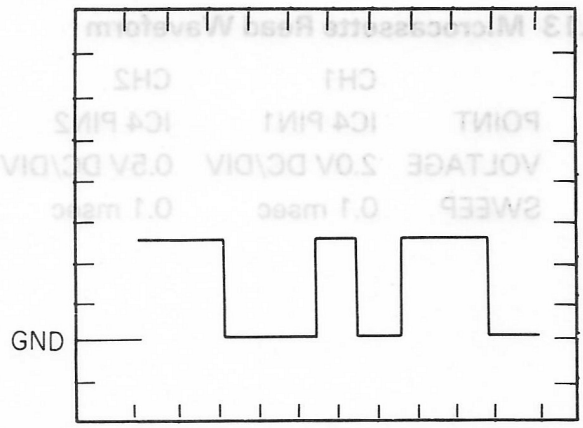

4.11 Cassette Read Waveform

POINT	IC 8D PIN7
VOLTAGE	2.0V AC/DIV
SWEEP	0.5 msec.

All bits are off. When bit is on, pulse width is twice as large.

*Normally high level

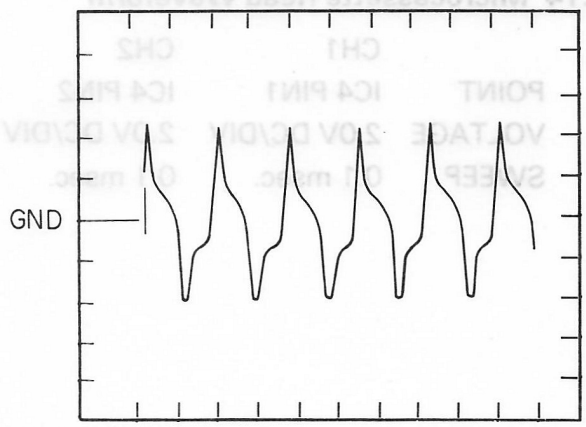

4.12 Cassette Read Waveform

POINT	IC 8D PIN6
VOLTAGE	2.0V DC/DIV
SWEEP	0.5 msec.

This is a shaped version of the above input to IC 8D Pin 7.

*Normally low level

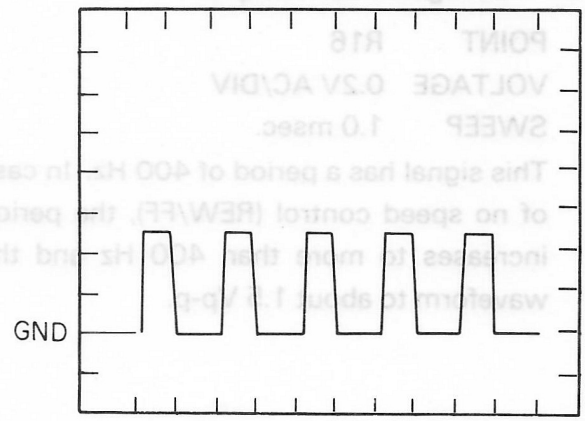

4.13 Microcassette Read Waveform

	CH1	CH2
POINT	IC4 PIN1	IC4 PIN2
VOLTAGE	2.0V DC/DIV	0.5V DC/DIV
SWEEP	0.1 msec	0.1 msec

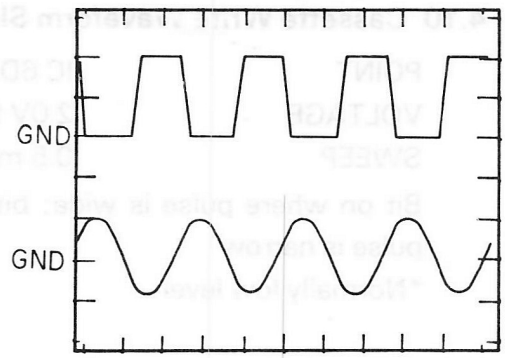

4.14 Microcassette Read Waveform

	CH1	CH2
POINT	IC4 PIN1	IC4 PIN2
VOLTAGE	2.0V DC/DIV	2.0V DC/DIV
SWEEP	0.1 msec.	0.1 msec.

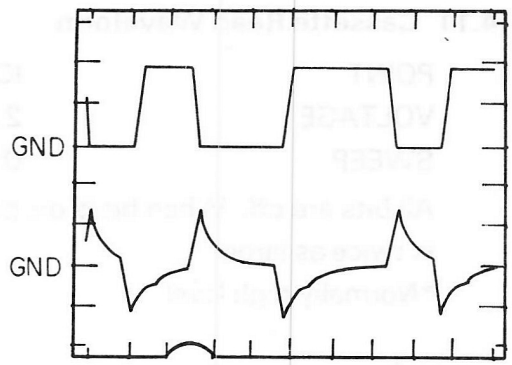

4.15 Tachogenerator Output

POINT R16
VOLTAGE 0.2V AC/DIV
SWEEP 1.0 msec.

This signal has a period of 400 Hz. In case of no speed control (REW/FF), the period increases to more than 400 Hz and the waveform to about 1.5 Vp-p.

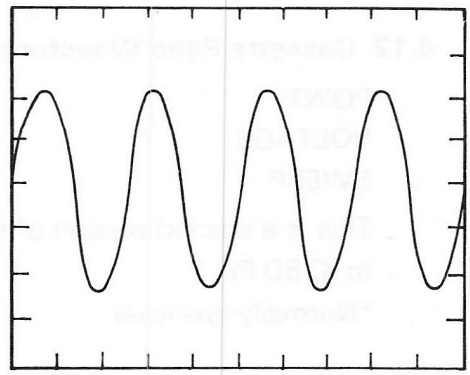

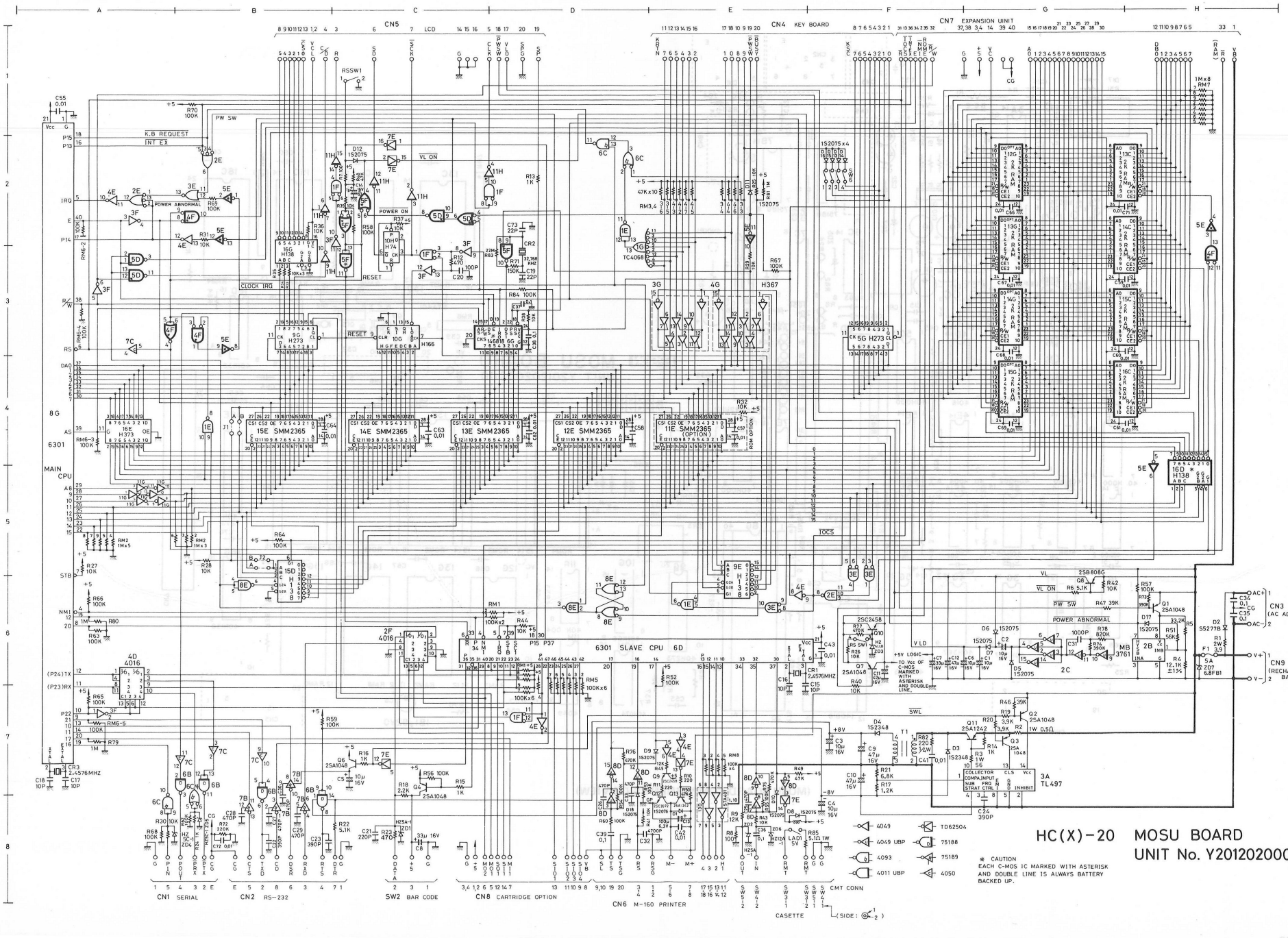
HC(X)-20 MOSU BOARD
UNIT No. Y201202000
CAUTION
EACH C-MOS IC MARKED WITH ASTERISK AND DOUBLE LINE IS ALWAYS BATTERY BACKED UP.
CN1 SERIAL
CN2 RS-232
SW2 BAR CODE
CN8 CARTRIDGE OPTION
CN6 M-160 PRINTER
CMT CONN
CASETTE
CN3 (AC ADAPTER)
CN9 (RECHARGEABLE BATTERY)
6301 MAIN CPU
6301 SLAVE CPU 6D
CN5
CN4 KEY BOARD
CN7 EXPANSION UNIT
LCD
PW SW
K.B REQUEST
INT EX
POWER ABNORMAL
RESET
CLOCK IRQ
VL ON
POWER ON
ROM OPTION
TL497

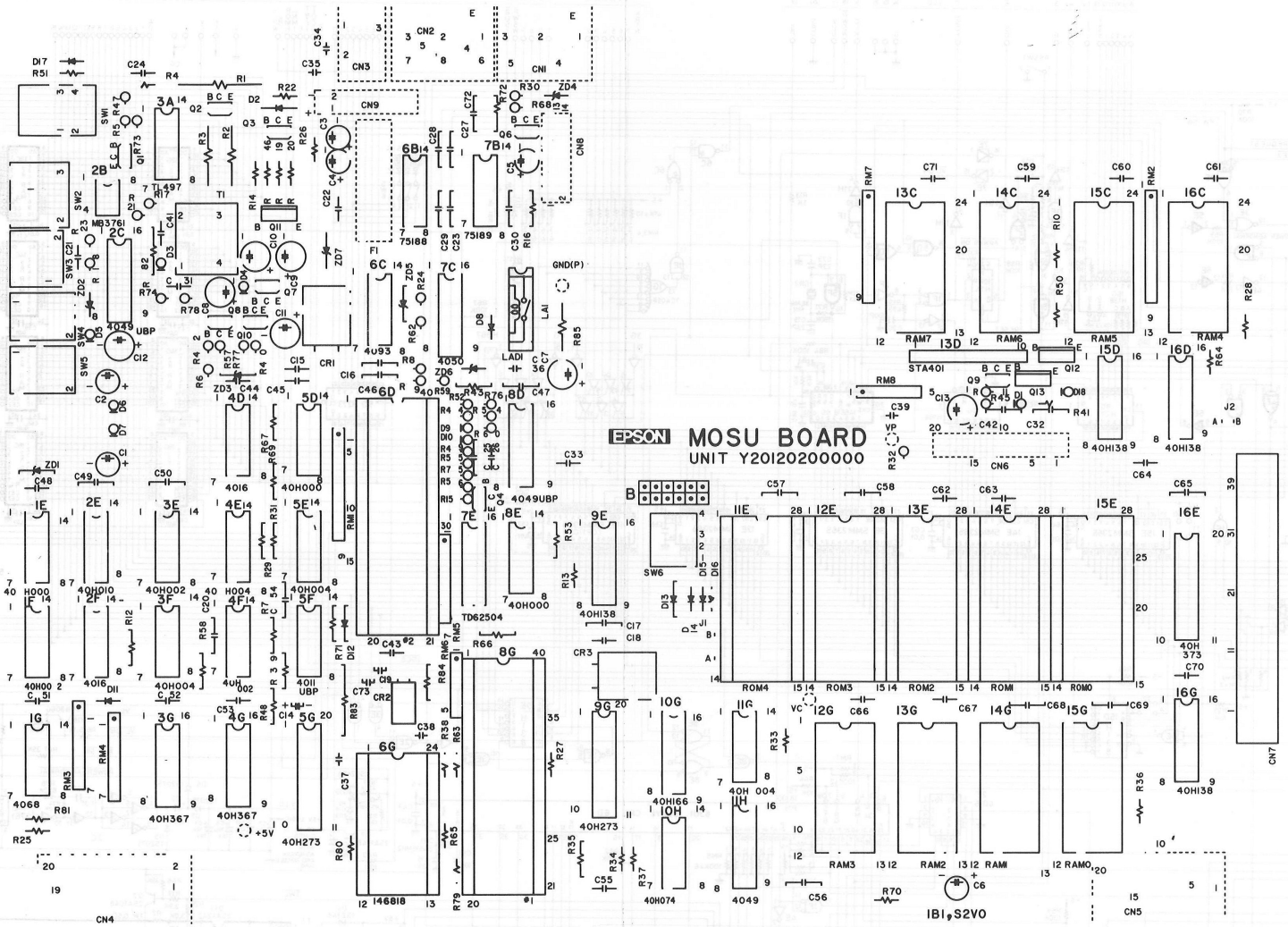

(MOSU BOARD COMPORNENT SIDE VIEW)

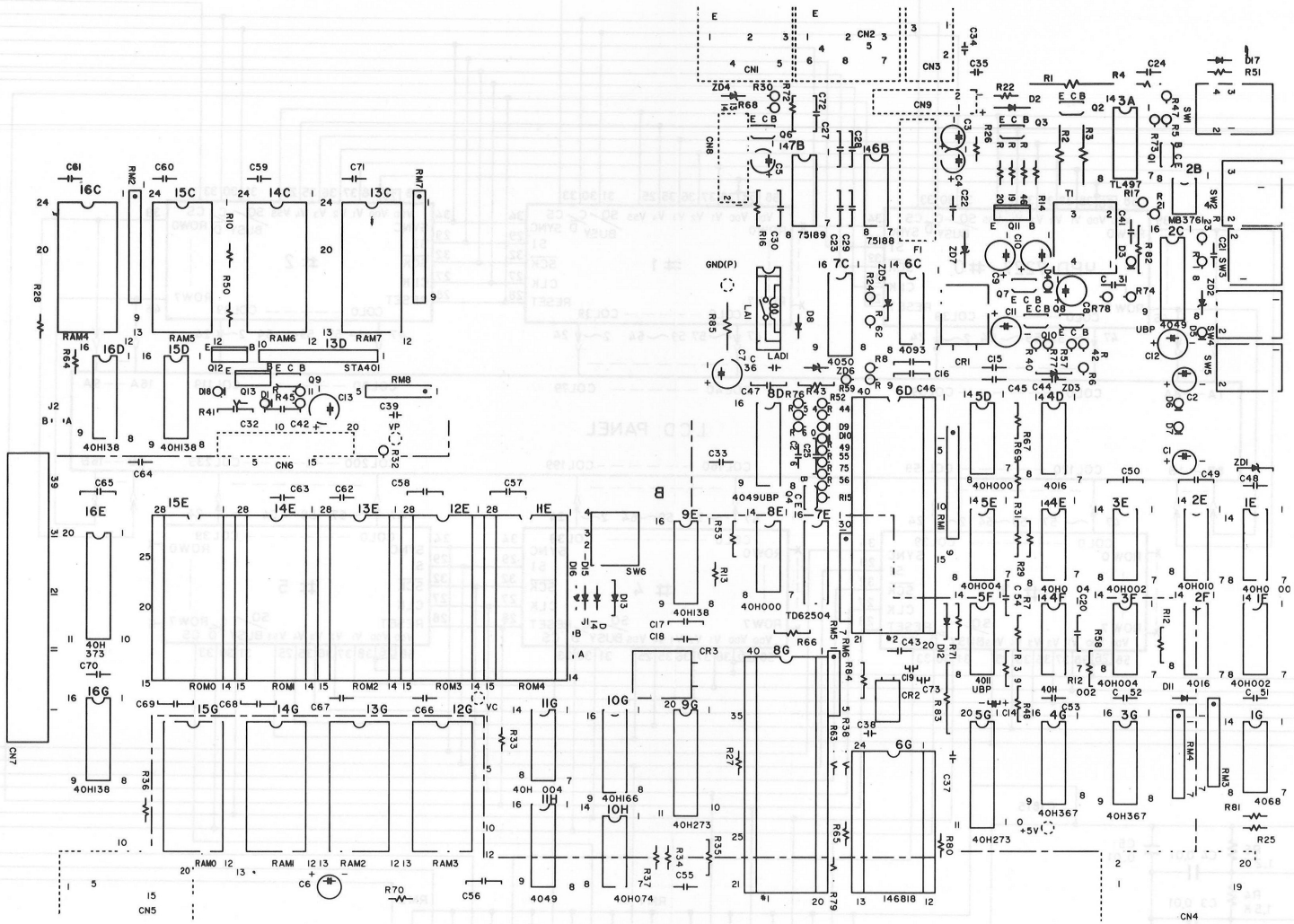

(MOSU BOARD REAR SIDE VIEW)

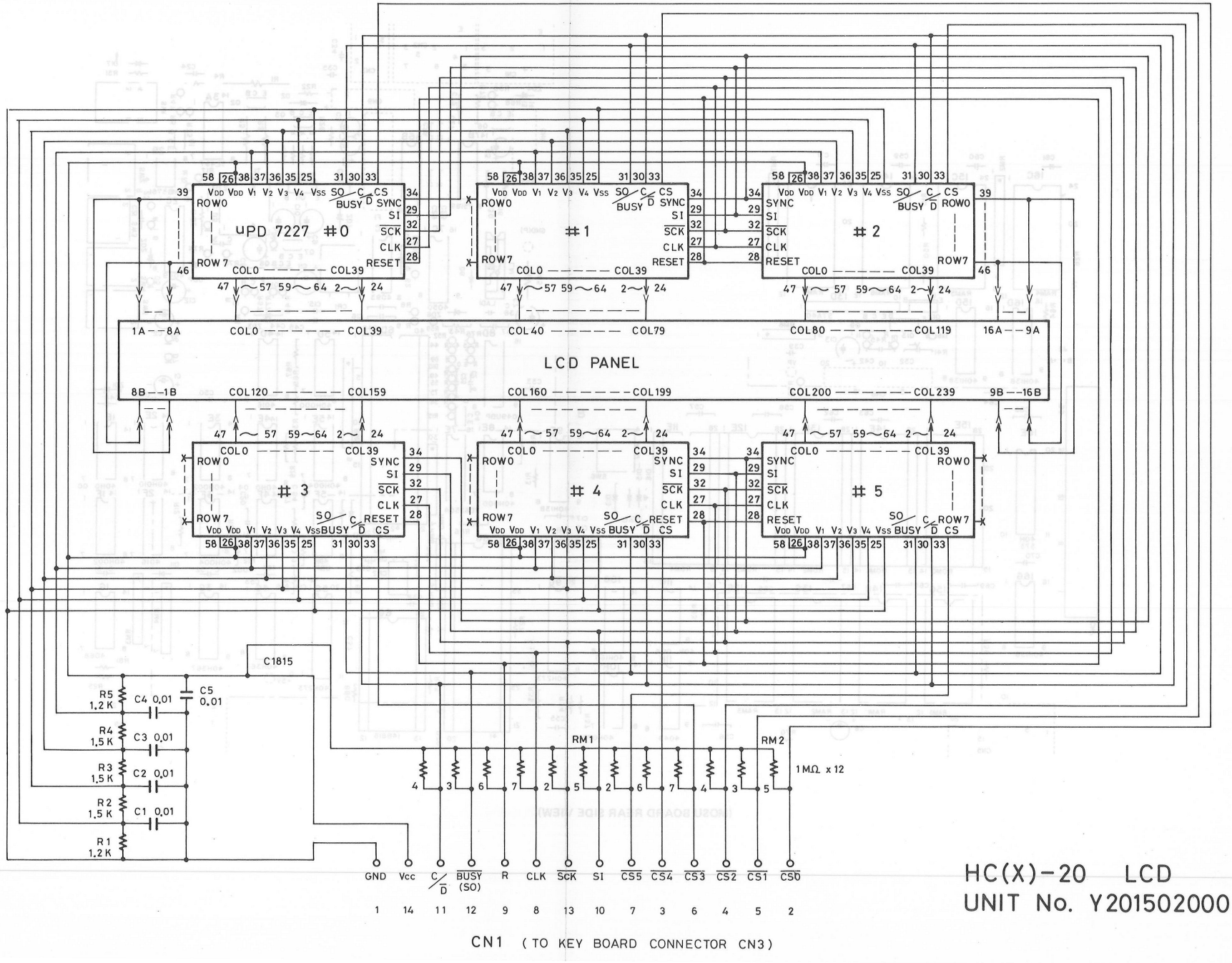

HC(X)-20 LCD
UNIT No. Y201502000

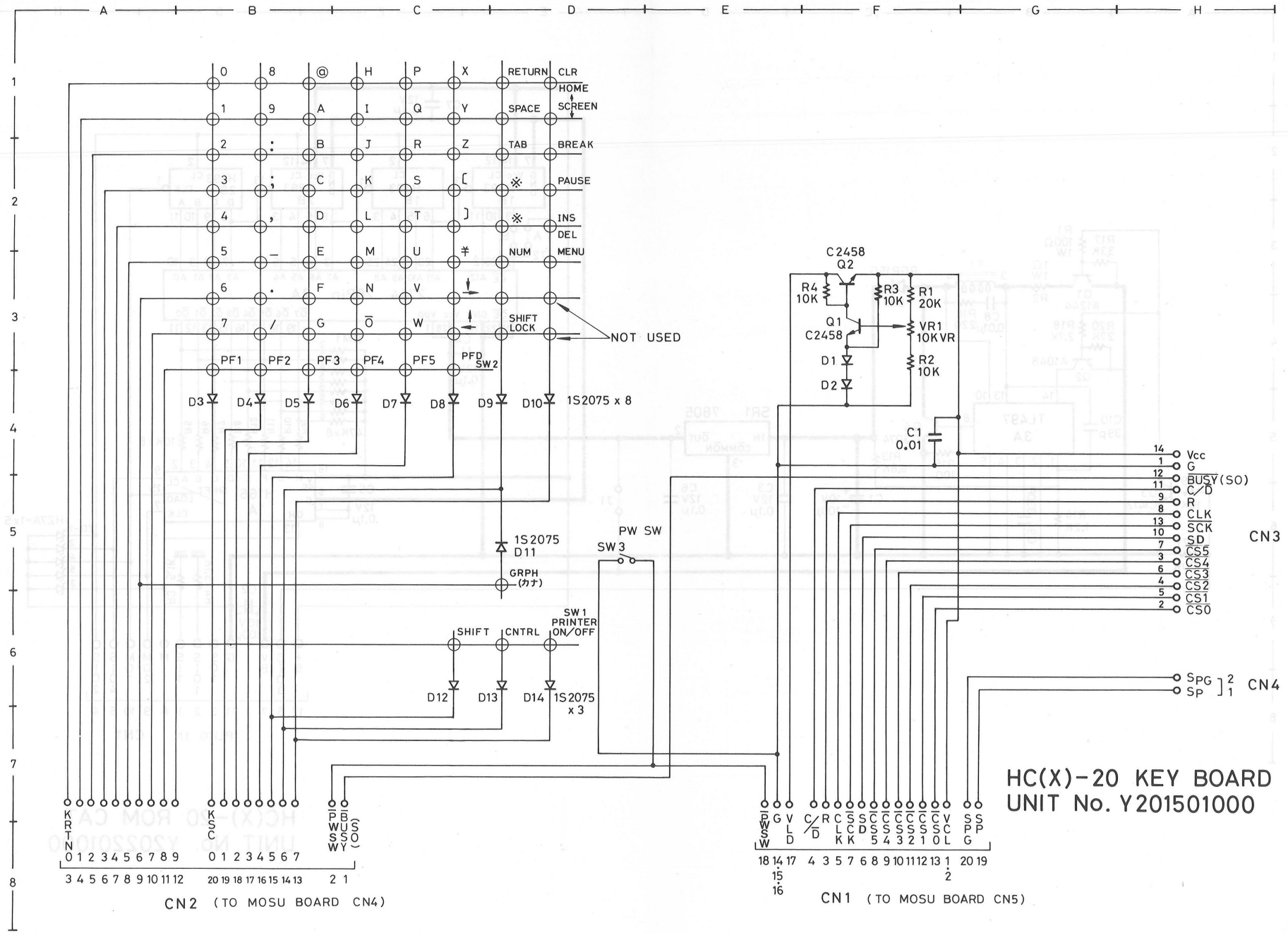
A B C D E F G H
1 2 3 4 5 6 7 8
0 8 @ H P X RETURN CLR HOME
1 9 A I Q Y SPACE SCREEN
2 : B J R Z TAB BREAK
3 ; C K S [※ PAUSE
4 , D L T] ※ INS DEL
5 — E M U ¥ NUM MENU
6 . F N V
7 / G Ō W SHIFT LOCK
NOT USED
PF1 PF2 PF3 PF4 PF5 PFD SW2
D3 D4 D5 D6 D7 D8 D9 D10 1S2075 x 8
1S2075 D11
GRPH (カナ)
PW SW
SW3
SHIFT CNTRL SW1 PRINTER ON/OFF
D12 D13 D14 1S2075 x 3
C2458 Q2
R4 10K
R3 10K
R1 20K
Q1 C2458
VR1 10K VR
D1
D2
R2 10K
C1 0.01
14 Vcc
1 G
12 BUSY(SO)
11 C/D
9 R
8 CLK
13 SCK
10 SD
7 CS5
3 CS4
6 CS3
4 CS2
5 CS1
2 CS0
CN3
SPG
SP
2 1
CN4
KRTN 0 1 2 3 4 5 6 7 8 9
KSC 0 1 2 3 4 5 6 7
PWSW BUSY(SO)
3 4 5 6 7 8 9 10 11 12 20 19 18 17 16 15 14 13 2 1
CN2 (TO MOSU BOARD CN4)
PWSW GND VLD C/D RCLK SSDK SCS5 SCS4 SCS3 SCS2 SCS1 SCOL VSPG SPP
18 14 15 16 17 4 3 5 7 6 8 9 10 11 12 13 1 2 20 19
CN1 (TO MOSU BOARD CN5)
HC(X)-20 KEY BOARD
UNIT No. Y201501000

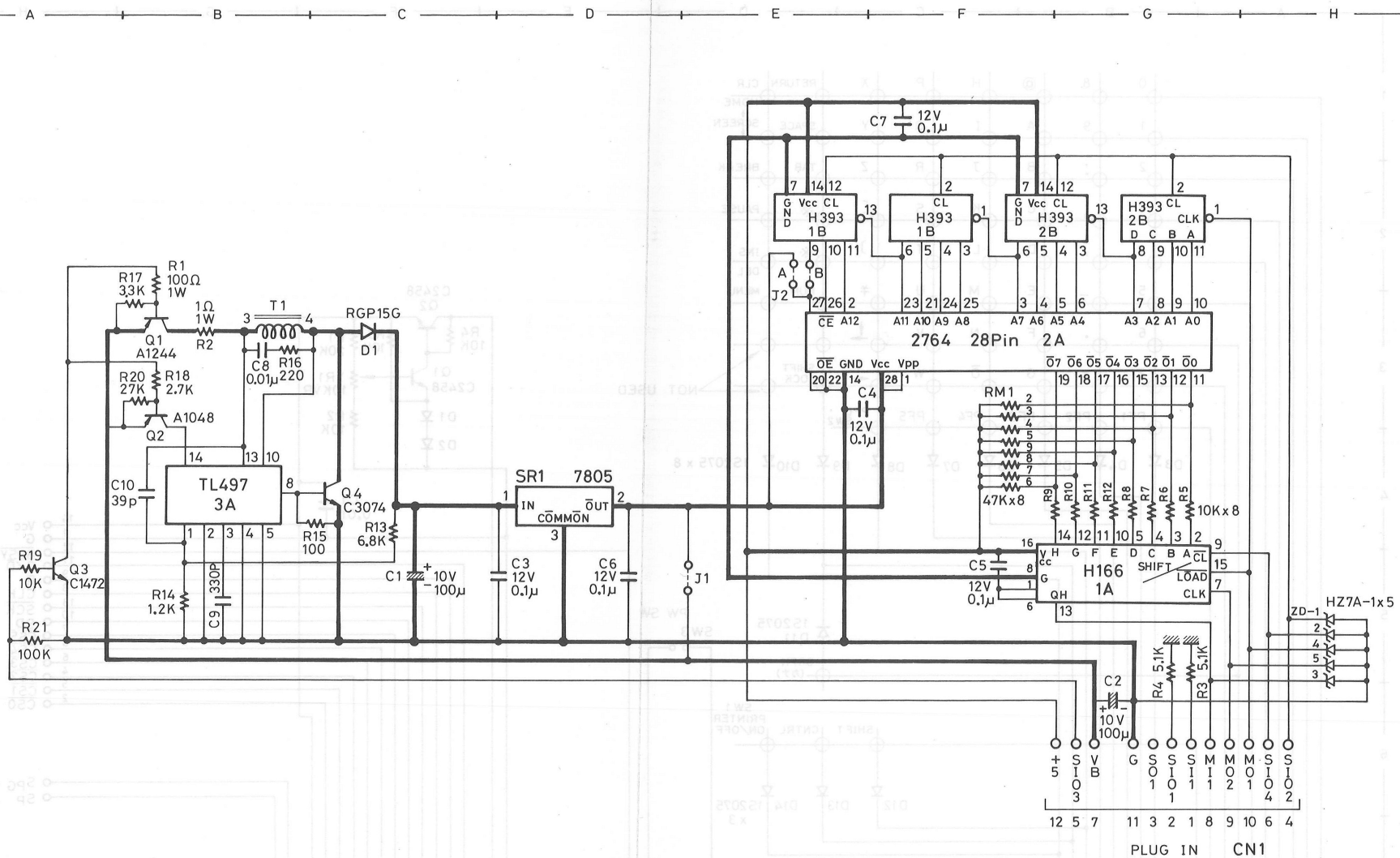

HC(X)-20 ROM CAT
UNIT No. Y202201000

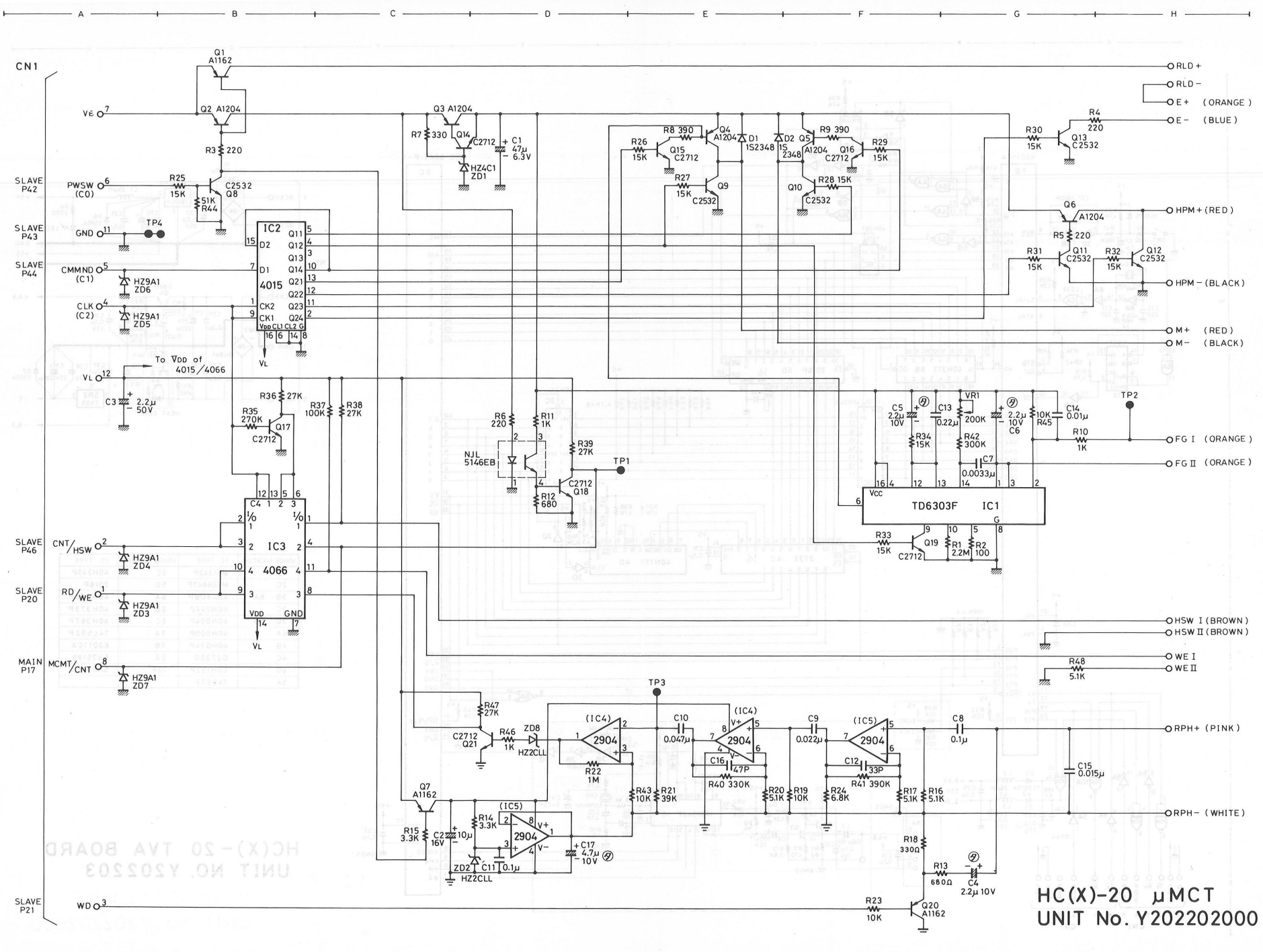
CN1
Q1 A1162
Q2 A1204
Q3 A1204
Q4 A1204
Q5 A1204
Q6 A1204
Q7 A1162
Q9 C2532
Q10 C2532
Q11 C2532
Q12 C2532
Q13 C2532
Q15 C2712
Q16 C2712
Q17 C2712
Q18 C2712
Q19 C2712
Q20 A1162
Q21 C2712
Q8 C2532
Q14 C2712
IC1 TD6303F
IC2 4015
IC3 4066
(IC4) 2904
(IC5) 2904
D1 1S2348
D2 1S2348
NJL 5146EB
ZD1 HZ4C1
ZD2 HZ2CLL
ZD3 HZ9A1
ZD4 HZ9A1
ZD5 HZ9A1
ZD6 HZ9A1
ZD7 HZ9A1
ZD8 HZ2CLL
VR1 200K
TP1
TP2
TP3
TP4
VE
PWSW (C0)
GND
CMMND (C1)
CLK (C2)
VL
To VDD of 4015/4066
CNT/HSW
RD/WE
MCMT/CNT
WD
SLAVE P42
SLAVE P43
SLAVE P44
SLAVE P46
SLAVE P20
MAIN P17
SLAVE P21
RLD+
RLD−
E+ (ORANGE)
E− (BLUE)
HPM+ (RED)
HPM− (BLACK)
M+ (RED)
M− (BLACK)
FG I (ORANGE)
FG II (ORANGE)
HSW I (BROWN)
HSW II (BROWN)
WE I
WE II
RPH+ (PINK)
RPH− (WHITE)
R1 2.2M
R2 100
R3 220
R4 220
R5 220
R6 220
R7 330
R8 390
R9 390
R10 1K
R11 1K
R12 680
R13 680Ω
R14 3.3K
R15 3.3K
R16 5.1K
R17 5.1K
R18 330Ω
R19 10K
R20 5.1K
R21 39K
R22 1M
R23 10K
R24 6.8K
R25 15K
R26 15K
R27 15K
R28 15K
R29 15K
R30 15K
R31 15K
R32 15K
R33 15K
R34 15K
R35 270K
R36 27K
R37 100K
R38 27K
R39 27K
R40 330K
R41 390K
R42 300K
R43 10K
R44 51K
R45 10K
R46 1K
R47 27K
R48 5.1K
C1 47μ 6.3V
C2 10μ 16V
C3 2.2μ 50V
C4 2.2μ 10V
C5 2.2μ 10V
C6 2.2μ 10V
C7 0.0033μ
C8 0.1μ
C9 0.022μ
C10 0.047μ
C11 0.1μ
C12 33P
C13 0.22μ
C14 0.01μ
C15 0.015μ
C16 47P
C17 4.7μ 10V
HC(X)-20 μMCT
UNIT No. Y202202000

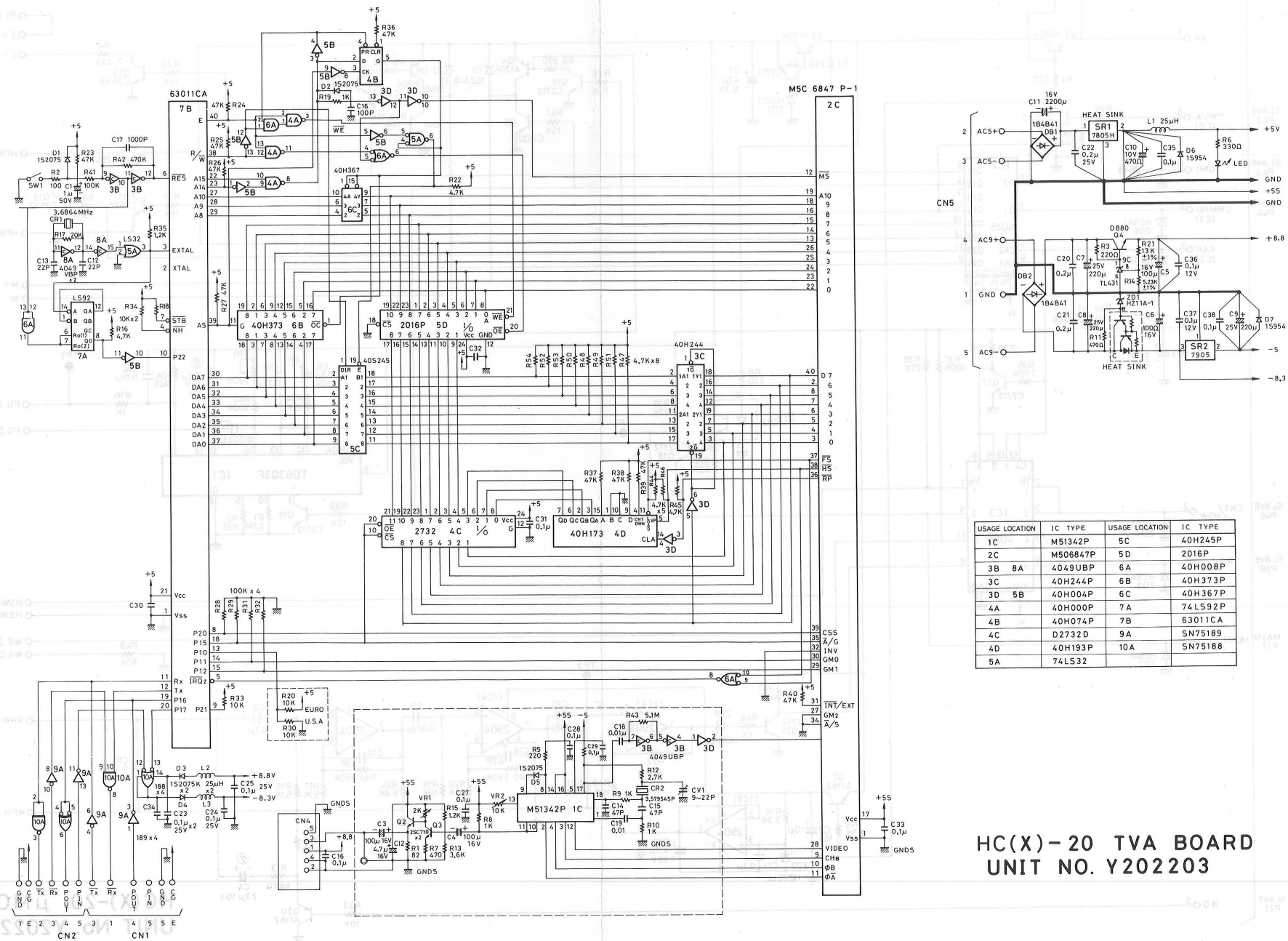

USAGE LOCATION	IC TYPE	USAGE LOCATION	IC TYPE
1C	M51342P	5C	40H245P
2C	M506847P	5D	2016P
3B 8A	4049UBP	6A	40H008P
3C	40H244P	6B	40H373P
3D 5B	40H004P	6C	40H367P
4A	40H000P	7A	74LS92P
4B	40H074P	7B	63011CA
4C	D2732D	9A	SN75189
4D	40H193P	10A	SN75188
5A	74LS32		

HC(X)-20 TVA BOARD
UNIT NO. Y202203

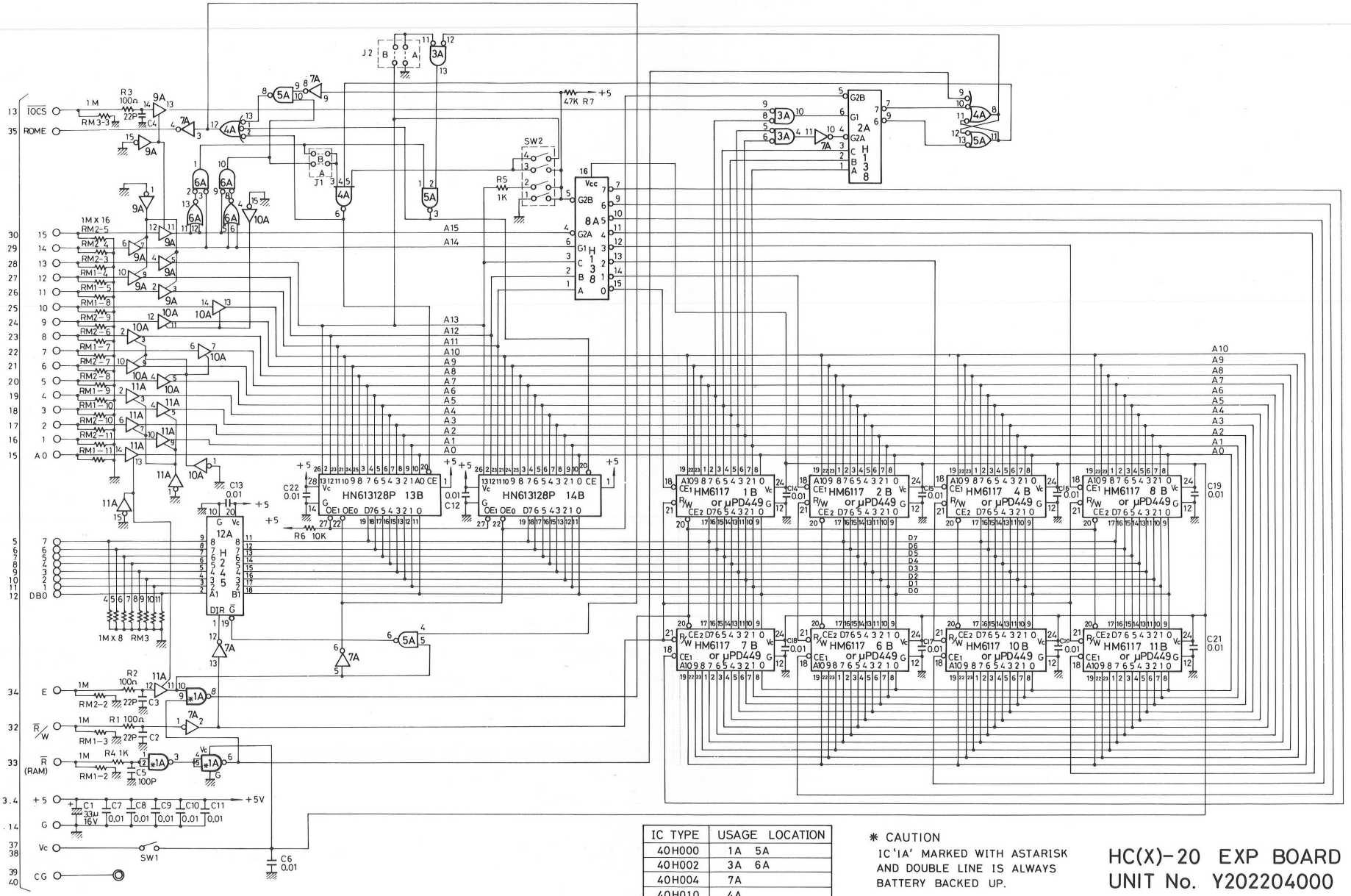

IC TYPE	USAGE LOCATION
40H000	1A 5A
40H002	3A 6A
40H004	7A
40H010	4A
40H138	2A 8A
40H367	9A 10A 11A
40H245	12A

* CAUTION
IC '1A' MARKED WITH ASTARISK AND DOUBLE LINE IS ALWAYS BATTERY BACKED UP.

HC(X)-20 EXP BOARD
UNIT No. Y202204000

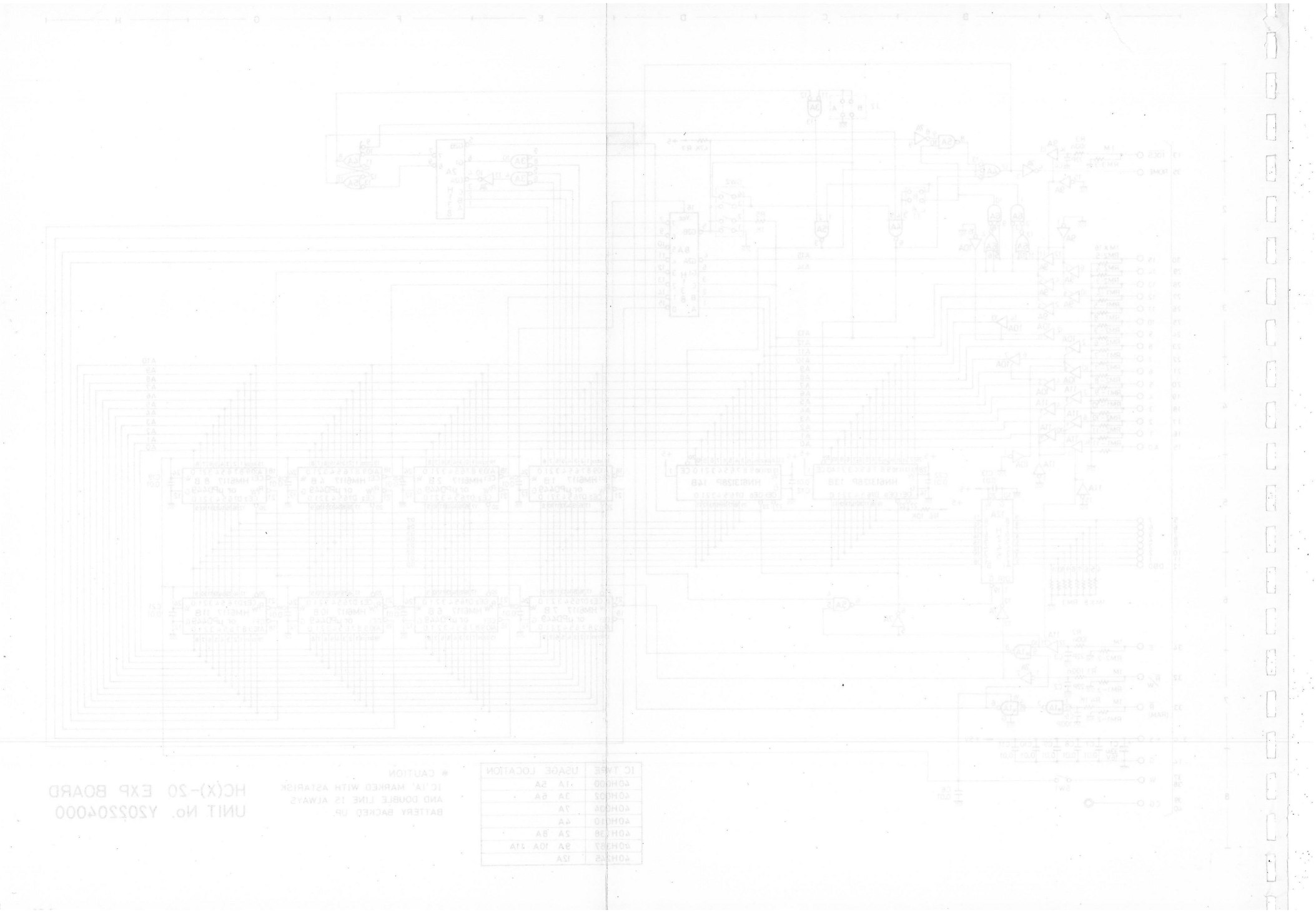

EPSON

EPSON CORPORATION

BUSINESS & INDUSTRIAL INSTRUMENT DIVISION

EPSON OVERSEAS MARKETING LOCATIONS

EPSON AMERICA, INC. (L.A.)
3415 Kashiwa Street. Torrance, CA. 90505 U.S.A.
Phone: (213) 539-9140 Telex: 182412

EPSON DEUTSCHLAND GmbH
Am Seestern 24 4000 Düsseldorf 11, F.R. Germany
Phone: 0211-5961001 Telex: 8584786

EPSON U.K. LTD.
Dorland House, 1F 388 High Road, Wembley London
Phone: (01) 900-0466/9 Telex: 8814169

EPSON CORPORATION SINGAPORE REPRESENTATIVE OFFICE
Suite 813, 8th Floor, World Trade Centre
No1, Maritime Square Telok Blangah Road, Singapore 0409
Phone: 2786071/2 Telex: RS39536

EPSON

Printed in Japan
82·11-1.5